SONY

DIGITAL VIDEOCASSETTE RECORDER

DVW-250/250P

Digital BETACAM™

MAINTENANCE MANUAL Part 2

Volume 2 1st Edition

Serial No. 10001 and Higher

⚠警告

このマニュアルは，サービス専用です。
お客様が，このマニュアルに記載された設置や保守，点検，修理などを行うと感電や火災，人身事故につながることがあります。
危険をさけるため，サービストレーニングを受けた技術者のみご使用ください。

⚠ WARNING

This manual is intended for qualified service personnel only.
To reduce the risk of electric shock, fire or injury, do not perform any servicing other than that contained in the operating instructions unless you are qualified to do so. Refer all servicing to qualified service personnel.

⚠ WARNUNG

Die Anleitung ist nur für qualifiziertes Fachpersonal bestimmt.
Alle Wartungsarbeiten dürfen nur von qualifiziertem Fachpersonal ausgeführt werden. Um die Gefahr eines elektrischen Schlages, Feuergefahr und Verletzungen zu vermeiden, sind bei Wartungsarbeiten strikt die Angaben in der Anleitung zu befolgen. Andere als die angegeben Wartungsarbeiten dürfen nur von Personen ausgeführt werden, die eine spezielle Befähigung dazu besitzen.

⚠ AVERTISSEMENT

Ce manual est destiné uniquement aux personnes compétentes en charge de l'entretien. Afin de réduire les risques de décharge électrique, d'incendie ou de blessure n'effectuer que les réparations indiquées dans le mode d'emploi à moins d'être qualifié pour en effectuer d'autres. Pour toute réparation faire appel à une personne compétente uniquement.

CAUTION

Danger of explosion if battery is incorrectly replaced.

Replace only with the same or equivalent type recommended by the manufacturer.
Dispose of used batteries according to the manufacturer's instructions.

ATTENTION

Il y a danger d'explosion s'il y a remplacement incorrect de la batterie.

Remplacer uniquement avec une batterie du même type ou d'un type équivalent recommandé par le constructeur.
Mettre au rebut les batteries usagées conformément aux instructions du fabricant.

Vorsicht!

Explosionsgefahr bei unsachgemäßem Austausch der Batterie.

Ersatz nur durch denselben oder einen vom Hersteller empfohlenen ähnlichen Typ.
Entsorgung gebrauchter Batterien nach Angaben des Herstellers.

ADVARSEL!

Lithiumbatteri-Eksplosionsfare ved fejlagtig håndtering.
Udskiftning må kun ske med batteri af samme fabrikat og type.
Levér det brugte batteri tilbage til leverandøren.

目次
Table of Contents

このマニュアルについて

本書の目的 3
構成 3

Manual Structure

Purpose of this manual 5
Contents 5

1. Block Diagrams

INDEX 1-1
OVERALL BLOCK (1/2) 1-2
OVERALL BLOCK (2/2) 1-3
VIDEO SIGNAL PROCESSING 1-5
SDI SIGNAL PROCESSING 1-6
AUDIO SIGNAL PROCESSING 1-9
DIGITAL VIDEO PROCESSING 1-11
DIGITAL DATA PROCESSING 1-13
PB RF/CUE SIGNAL PROCESSING 1-14
SYSTEM CONTROL BLOCK 1-17
SERVO CONTROL BLOCK 1-19
POWER SUPPLY BLOCK 1-20

2. Board Layouts

INDEX 2-1
CC-66 BOARD 2-2
VPR-12 BOARD 2-3
DIF-31 BOARD 2-4
CP-260 BOARD 2-5
CON-18, ADA-44 BOARD 2-6
VR-194/205/206, DUS-339 BOARD 2-7
DPR-62 BOARD 2-8
APR-20, EQ-54 BOARD 2-10
KY-315 BOARD 2-11
SST-3 BOARD 2-12
SE-233, DET-15/26 BOARD 2-14
CS-25/26, TR-57 BOARD 2-15

MB-601 BOARD 2-16
MB-601, FU-63, DC-85 BOARD 2-17
PSW-31A/31B/31C BOARD 2-18

3. Schematic Diagrams

INDEX 3-1
FRAME WIRING (1/2) 3-2
FRAME WIRING (2/2) 3-4
CC-66 BOARD 3-6
VPR-12 BOARD 3-8
DIF-31 BOARD 3-20
CP-260 BOARD 3-26
ADA-44 BOARD 3-32
VR-194, DUS-339 BOARD 3-38
DPR-62 BOARD 3-40
APR-20 BOARD 3-68
EQ-54 BOARD 3-70
SST-3 BOARD 3-76
KY-315 BOARD 3-94
SE-233, DET-15/26 BOARD 3-96
CS-25/26, TR-57 BOARD 3-97
PSW-31A BOARD 3-98
PSW-31B BOARD 3-100
PSW-31C BOARD 3-101
FU-63, DC-85 BOARD 3-102
MB-601 BOARD 3-104

4. Semiconductor Pin Assignments

5. Spare Parts

5-1. 補修部品注意事項 5-1
5-1. Notes on Repair Parts 5-1
5-2. Exploded Views 5-2
5-3. Electrical Parts List 5-38
5-4. Frame List 5-94
5-5. Accessories List 5-97
5-6. Optional Fixtures List 5-98

このマニュアルについて

本書の目的

本書は，デジタルビデオカセットレコーダー DVW-250 のメンテナンスマニュアルです。
本書では，部品レベルでのサービスを前提とした情報（ブロック図，マウント図，回路図，詳細なパーツリスト等）を記載しています。

構成

本書の構成を把握していただくために，全章の概略を以下に説明します。

メンテナンスマニュアル
パート2　Volume 2

Section 1　Block Diagrams
基板配置図，ブロック図を記載しています。

Section 2　Board Layouts
マウント図を記載しています。

Section 3　Schematic Diagrams
回路図を記載しています。

Section 4　Semiconductor Pin Assignments
本機に搭載されている半導体のピン名称，機能説明等を記載しています。

Section 5　Spare Parts
本機の機構部品を対象とした分解図，電気部品リスト，治工具リストを記載しています。

メンテナンスマニュアル
パート2　Volume 1

第 1 章　サービスインフォメーション
第 2 章　機構部品の交換
第 3 章　機構部品の調整
第 4 章　基板の交換方法
第 5 章　電気調整

Manual Structure

Purpose of this manual

This manual is maintenance manual of Digital Videocassette Recorder DVW-250/250P.
This manual describes the information items (block diagrams, board layouts, schematic diagrams, detailed parts list, etc.) that premise the service based on the component parts.

Contents

The following is a summary of the sections for understanding the contents of this manual.

Maintenance Manual Part 2 Volume 2

Section1 Block Diagrams
Describes the locations of printed circuit board, and the block diagrams.

Section 2 Board Layouts
Describes the board layouts.

Section 3 Schematic Diagrams
Describes the schematic diagrams.

Section 4 Semiconductor Pin Assignments
Describes the pin assignments, and the function explanation used in this unit.

Section 5 Spare Parts
Describes the exploded views for the machanical parts, the electrical parts list, and the optional fixtures list in this unit.

Maintenance Manual Part 2 Volume 1

Section 1 Service Overview
Section 2 Replacement of Mechanical Parts
Section 3 Mechanical Alignment
Section 4 Replacement of Circuit Boards
Section 5 Electrical Alignment

Section 1
Block Diagrams

INDEX

System	Board name	Circuit function	Page
OVERALL			1-2
VIDEO	CC-66	Video Input/Output	1-4
	VPR-12	Video Signal Processor (AD/DA)	1-4
	DIF-31	4:2:2 Component Serial Digital Interface	1-6
AUDIO	CP-260	Audio Input/Output, Panel Switches	1-8
	ADA-44	Audio Signal Processor (AD/DA)	1-8
	CON-18	TC IN/OUT Connectors	1-17
	VR-194	Audio Rec Level Selector (Preset/Variable)	1-8
	VR-205	Phone Level Control	1-9
	VR-206	Audio Rec Level Control	1-8
DIGITAL PROCESS	DPR-62	Digital Data Processor (Encode/Decode, Error Correction) Ref CK Generator, Data Rate Converter Rec Current Control, Rec Envelope Detector	1-10
	APR-20	Audio Signal Processor (Limiter)	1-12
RF & CUE	EQ-54	RF Equalizer (PB EQ, PB Envelope Detector) Cue Rec/PB	1-14
SERVO, SYSTEM CONTROL, TIMECODE	KY-315	Panel Switches	1-17
	SST-3	Servo & System Control, Timecode Full Erase & Channel Erase Oscillator	1-16
	SE-233	Sensor (Casette Coding)	1-19
	DET-15	Cassette In Detector	1-19
	DET-26	Sensor (Thread/Unthread)	1-19
	CS-25	Cassette Up/Down Detector	1-19
	CS-26	Cassette Up/Down Detector	1-19
	TR-57	S-Tension Detector	1-18
POWER SUPPLY	FU-63	Fuse	1-20
	PSW-31A	DC-DC Converter	1-20
	PSW-31B	DC-DC Converter	1-20
	PSW-31C	DC-DC Converter	1-20

1-1

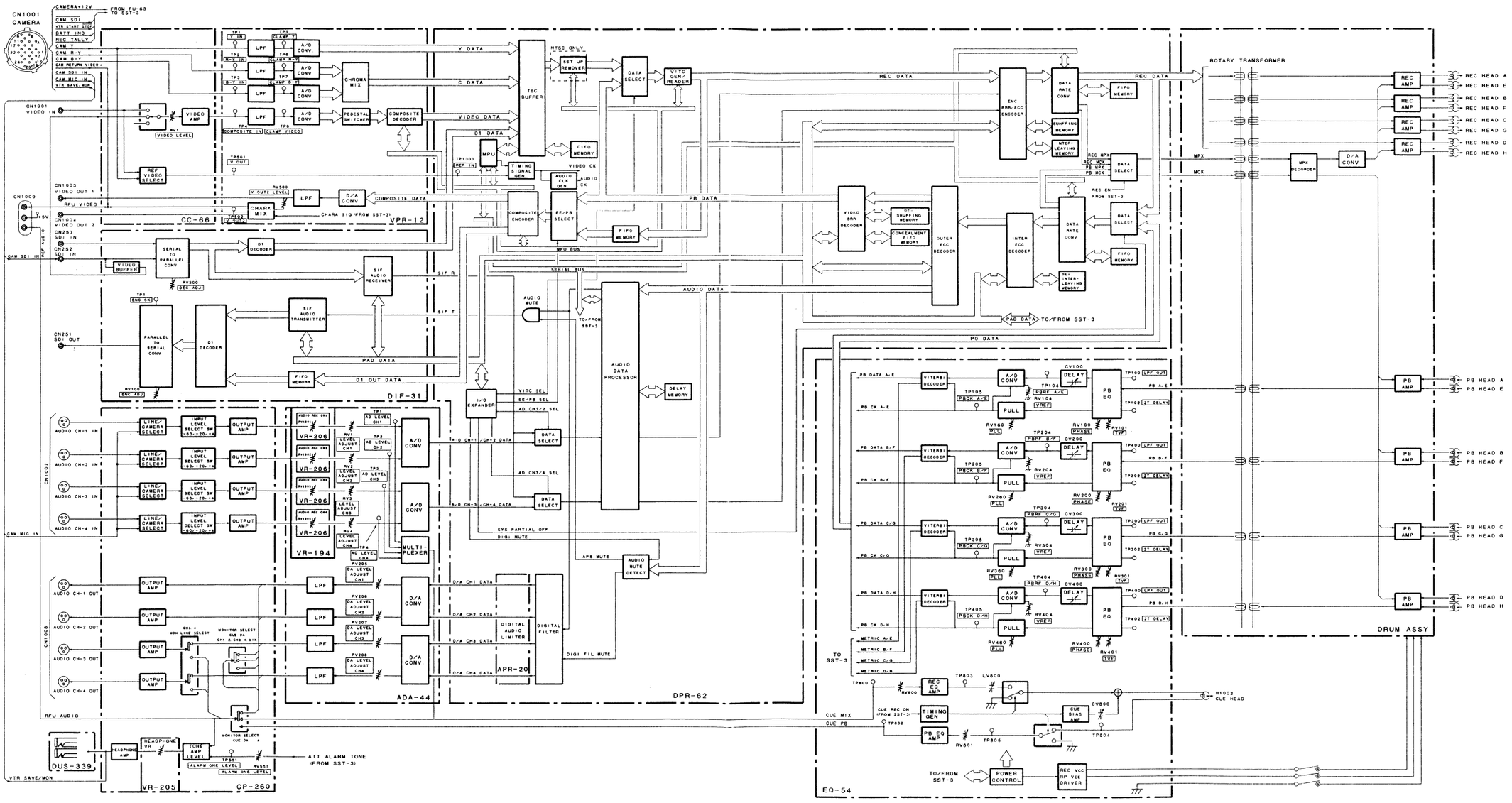

OVERALL BLOCK (1/2)

DVW-250/250P

OVERALL BLOCK (2/2)

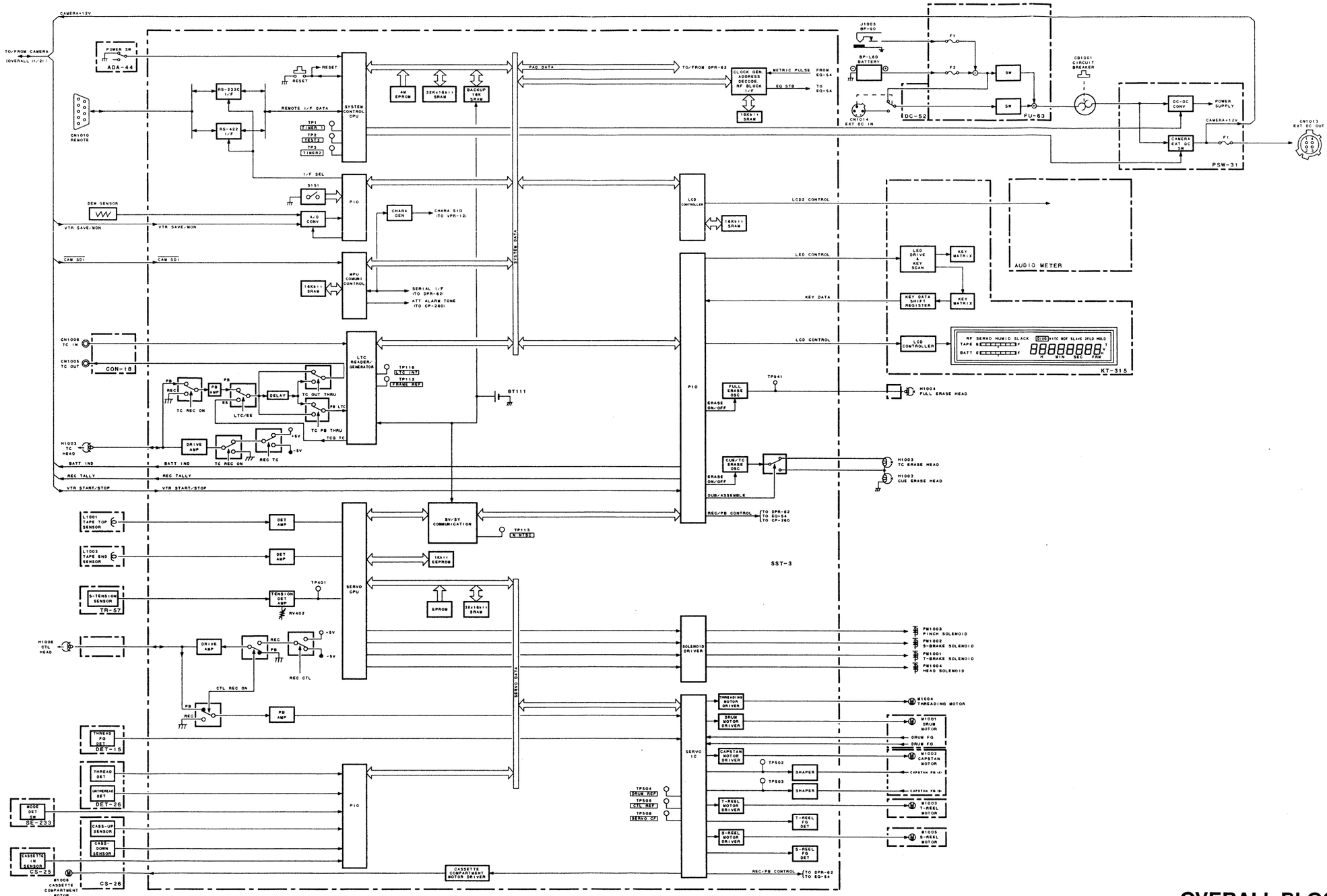

1-3

OVERALL BLOCK (2/2)
DVW-250/250P

VIDEO SIGNAL PROCESSING

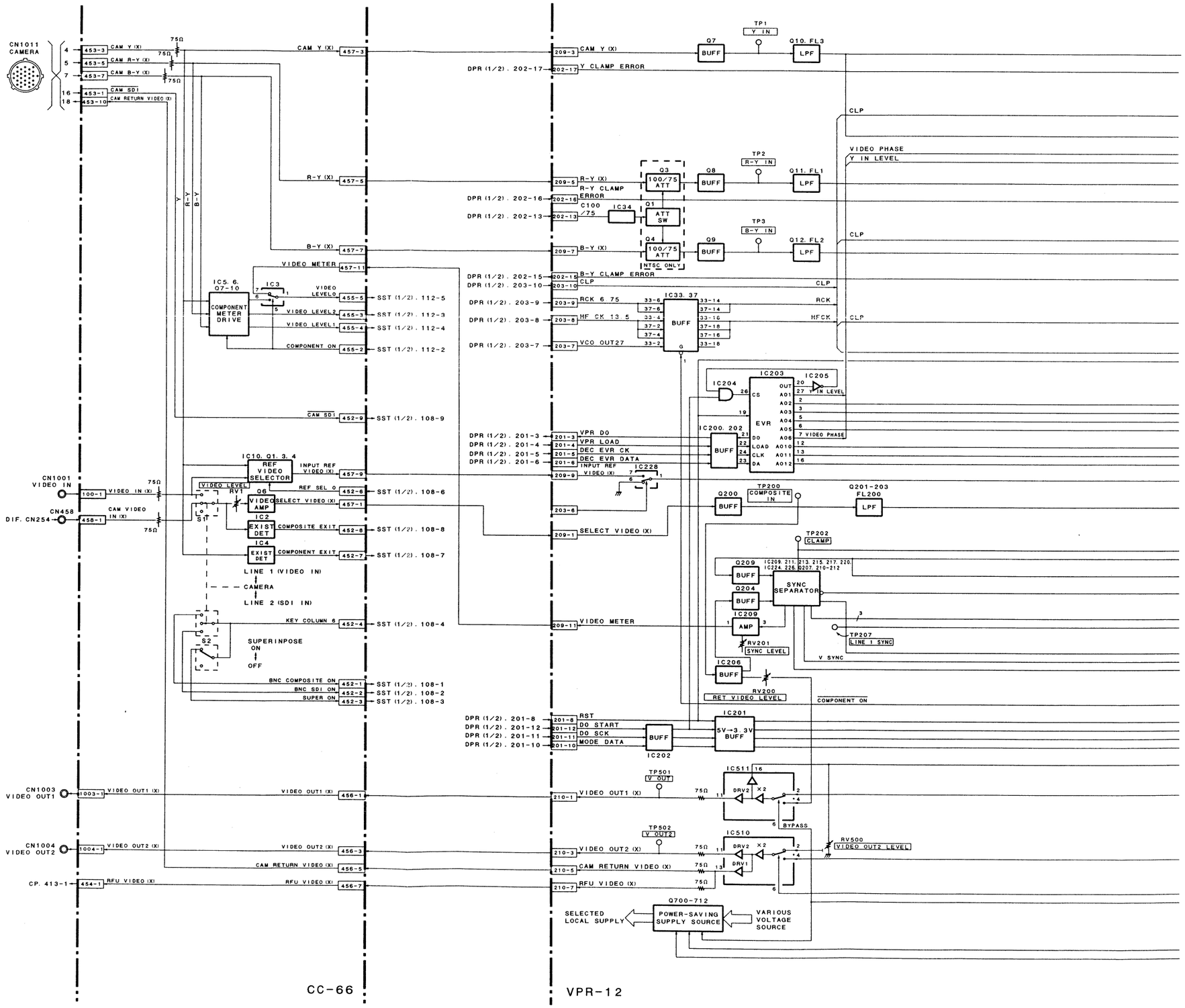

1-4

VIDEO SIGNAL PROCESSING

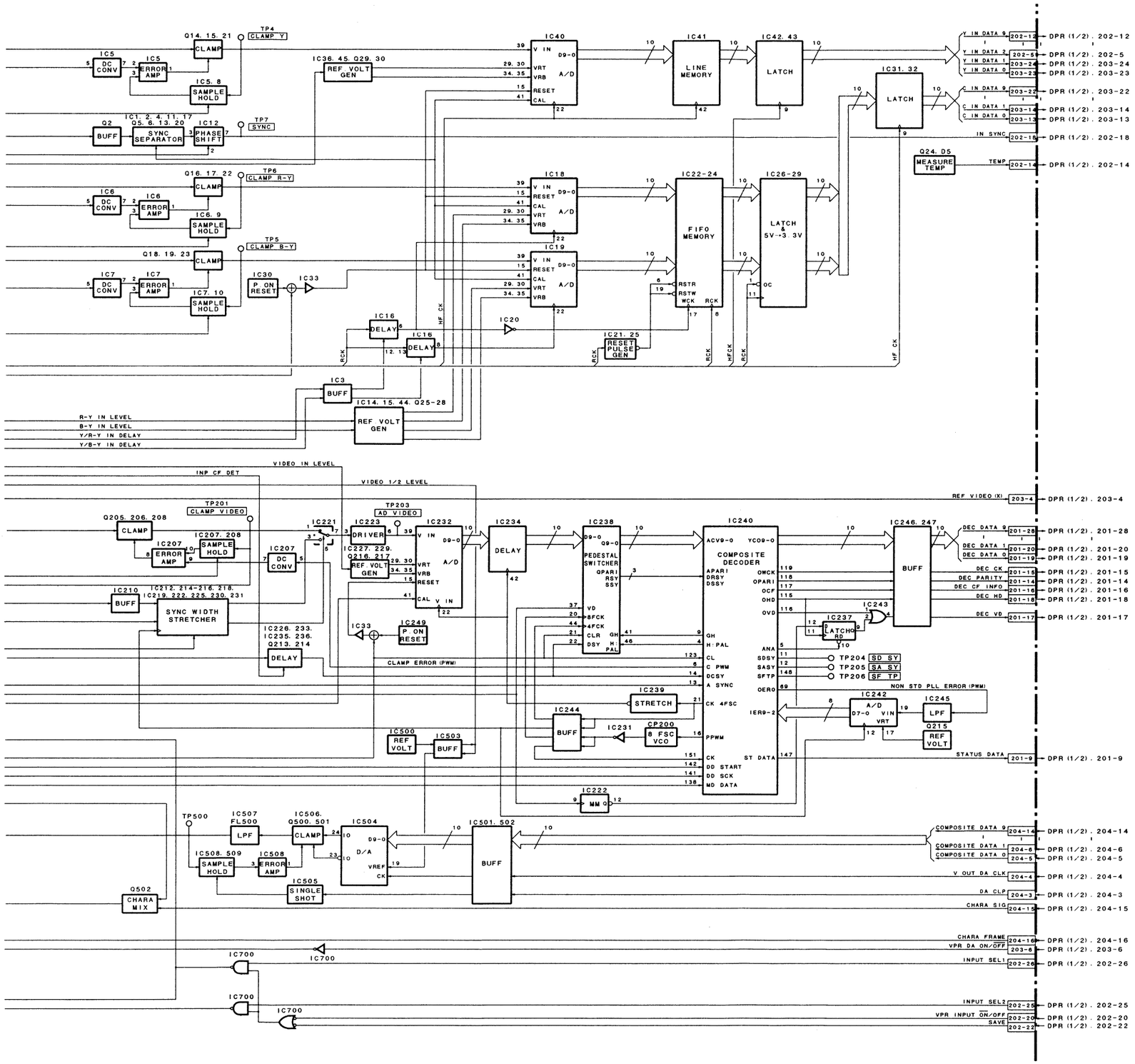

1-5

VIDEO SIGNAL PROCESSING
DVW-250/250P

SDI SIGNAL PROCESSING

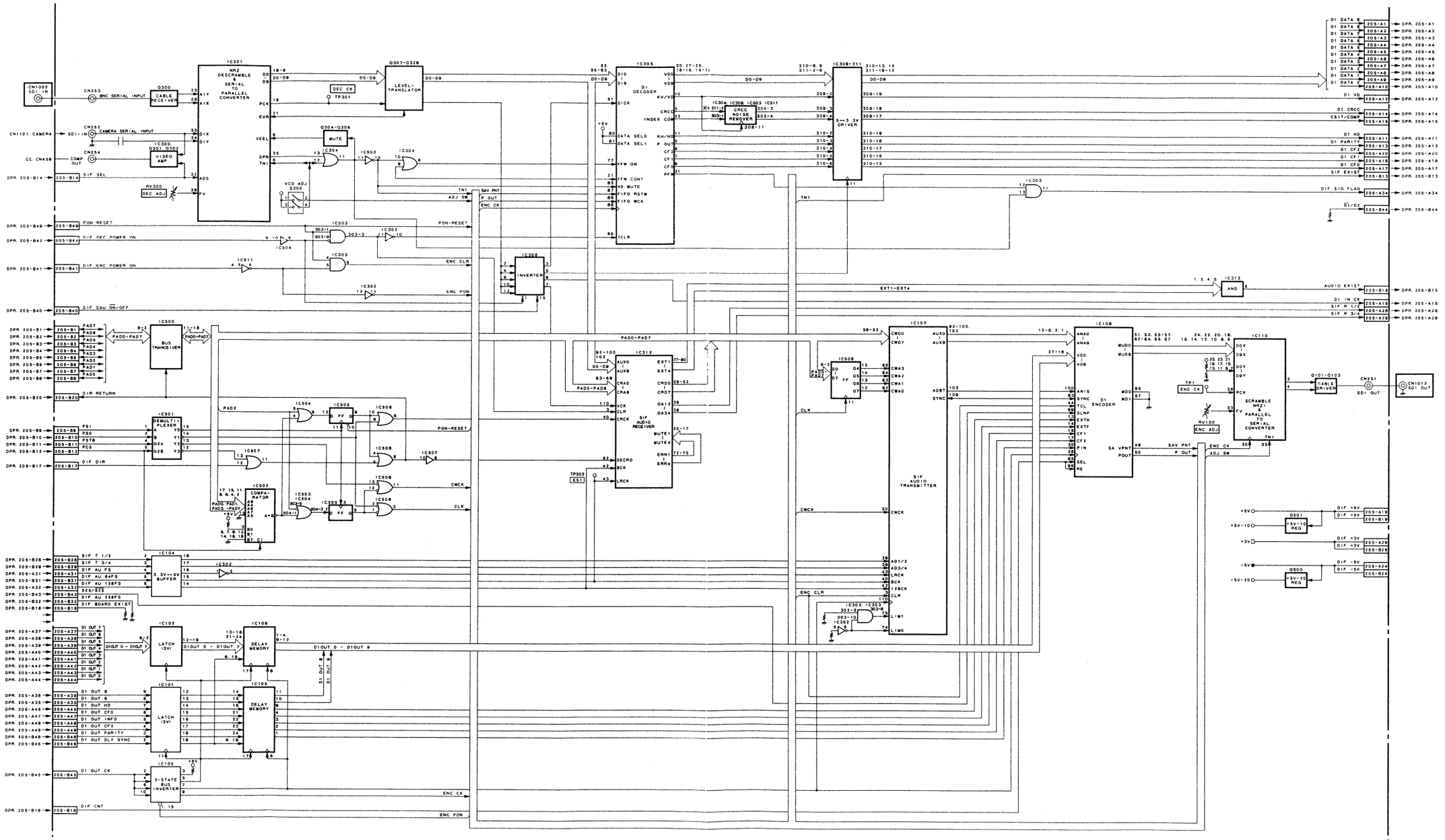

AUDIO SIGNAL PROCESSING

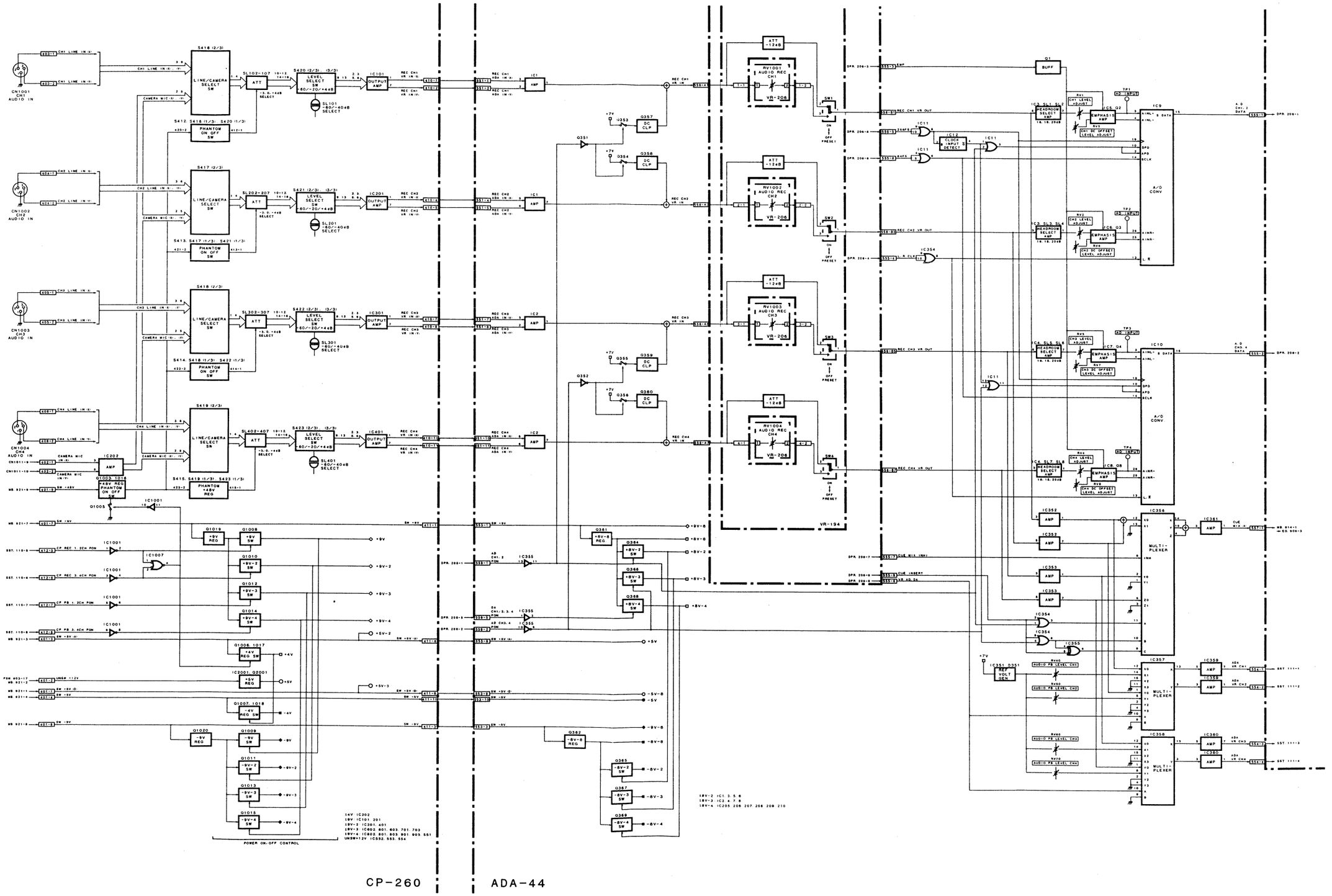

1-8

AUDIO SIGNAL PROCESSING

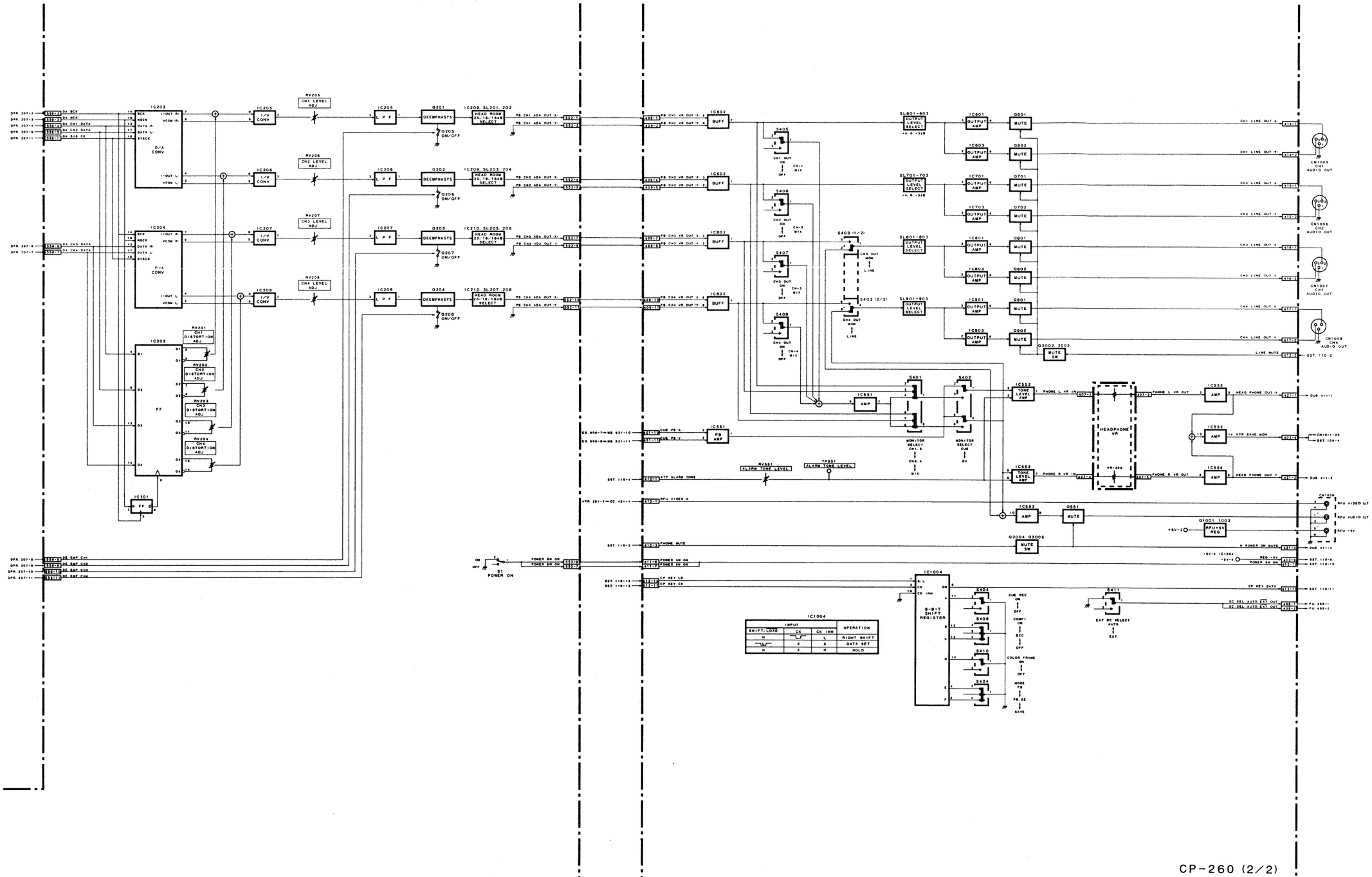

CP-260 (2/2)

DIGITAL VIDEO PROCESSING

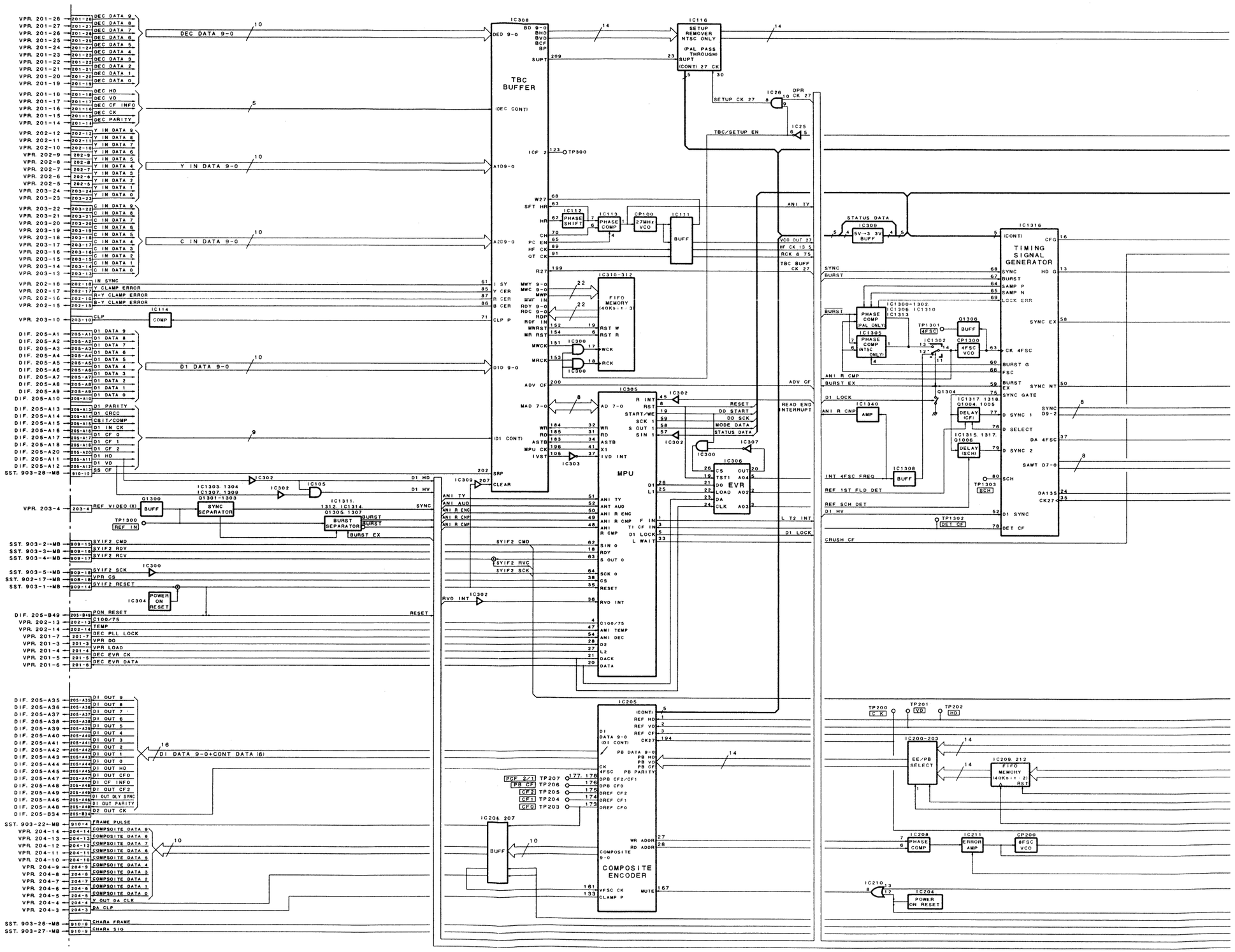

1-10

DIGITAL VIDEO PROCESSING

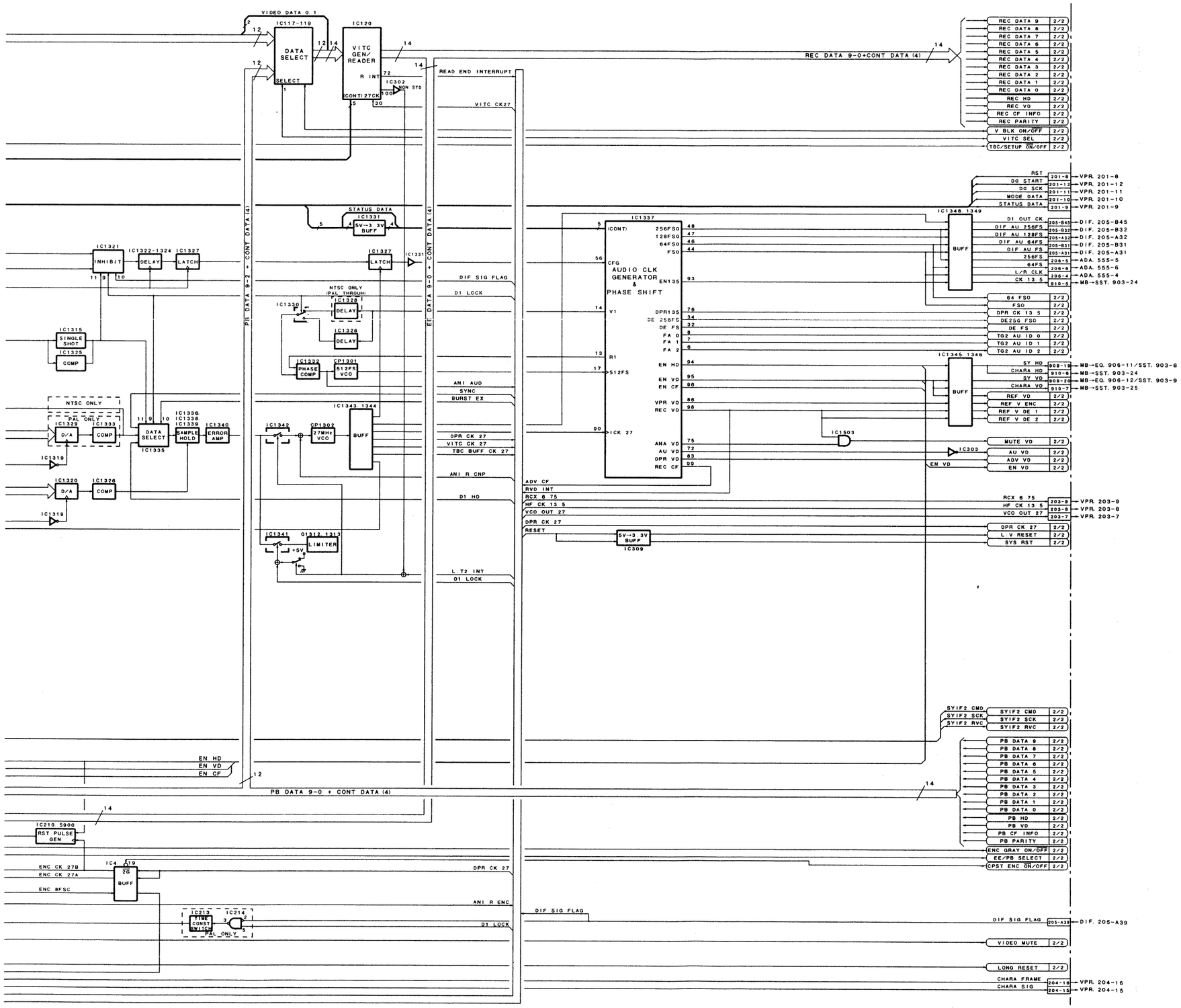

1-11

DIGITAL VIDEO PROCESSING
DVW-250/250P

DIGITAL DATA PROCESSING

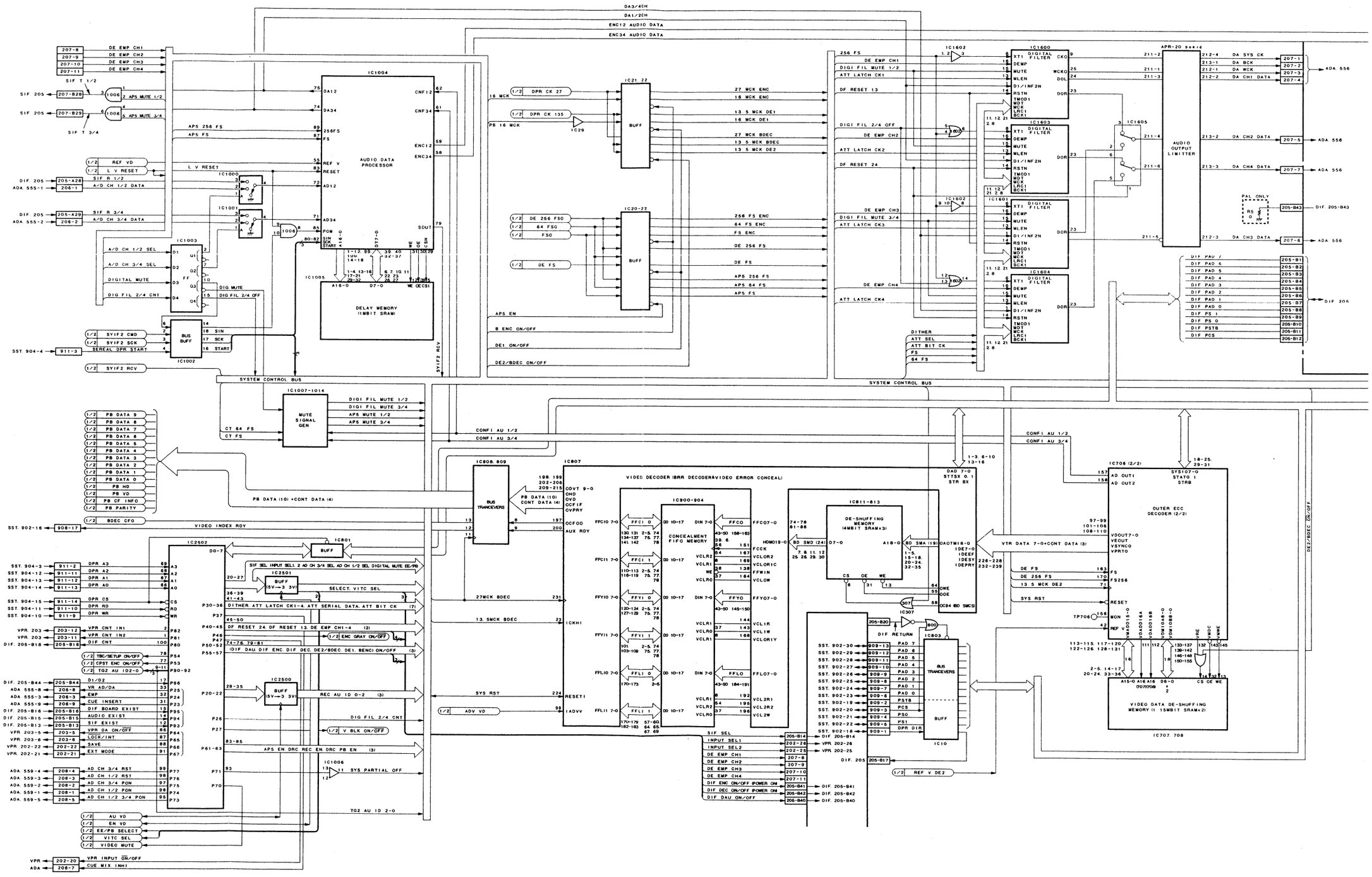

1-12

DIGITAL DATA PROCESSING

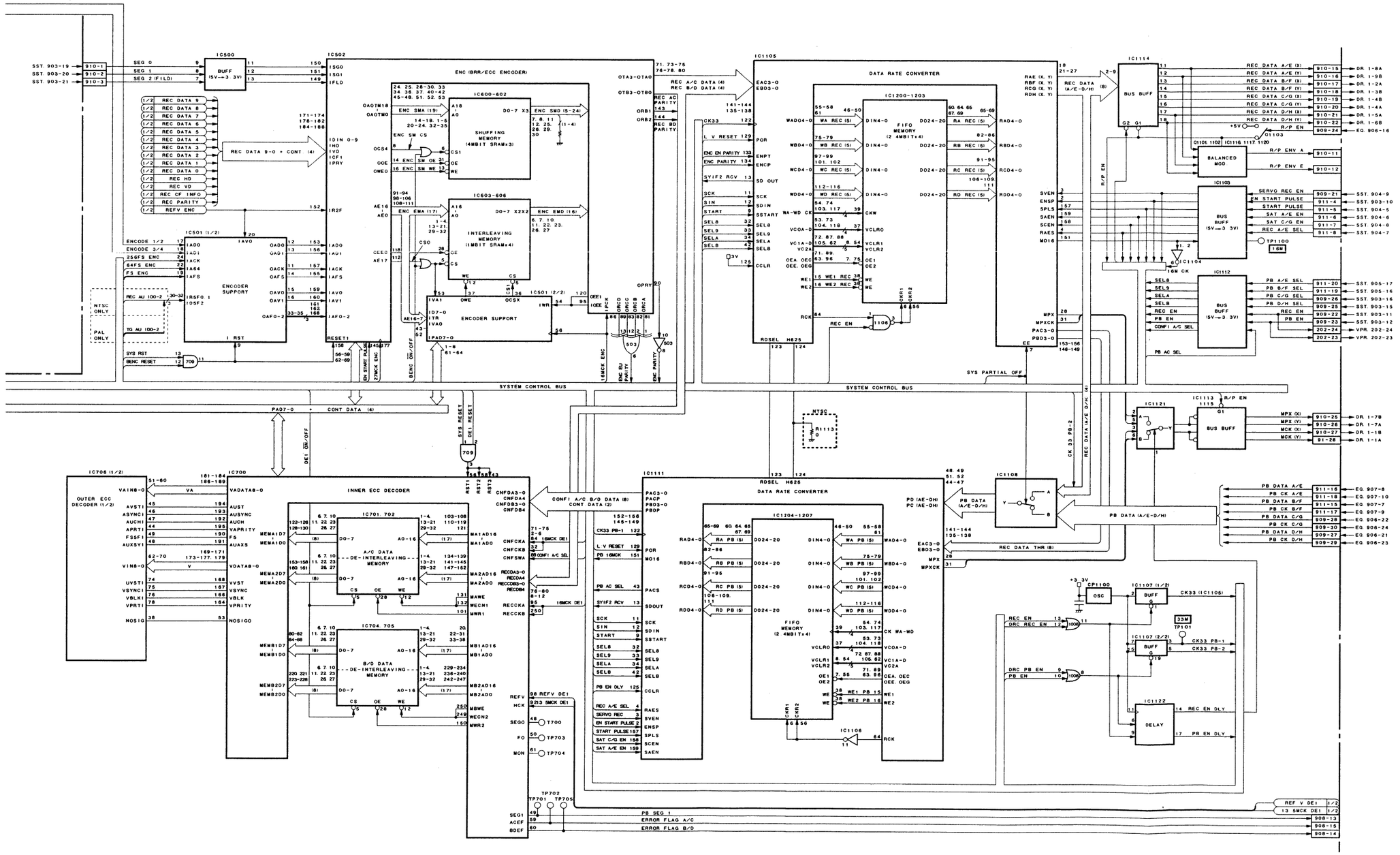

PB RF/CUE SIGNAL PROCESSING

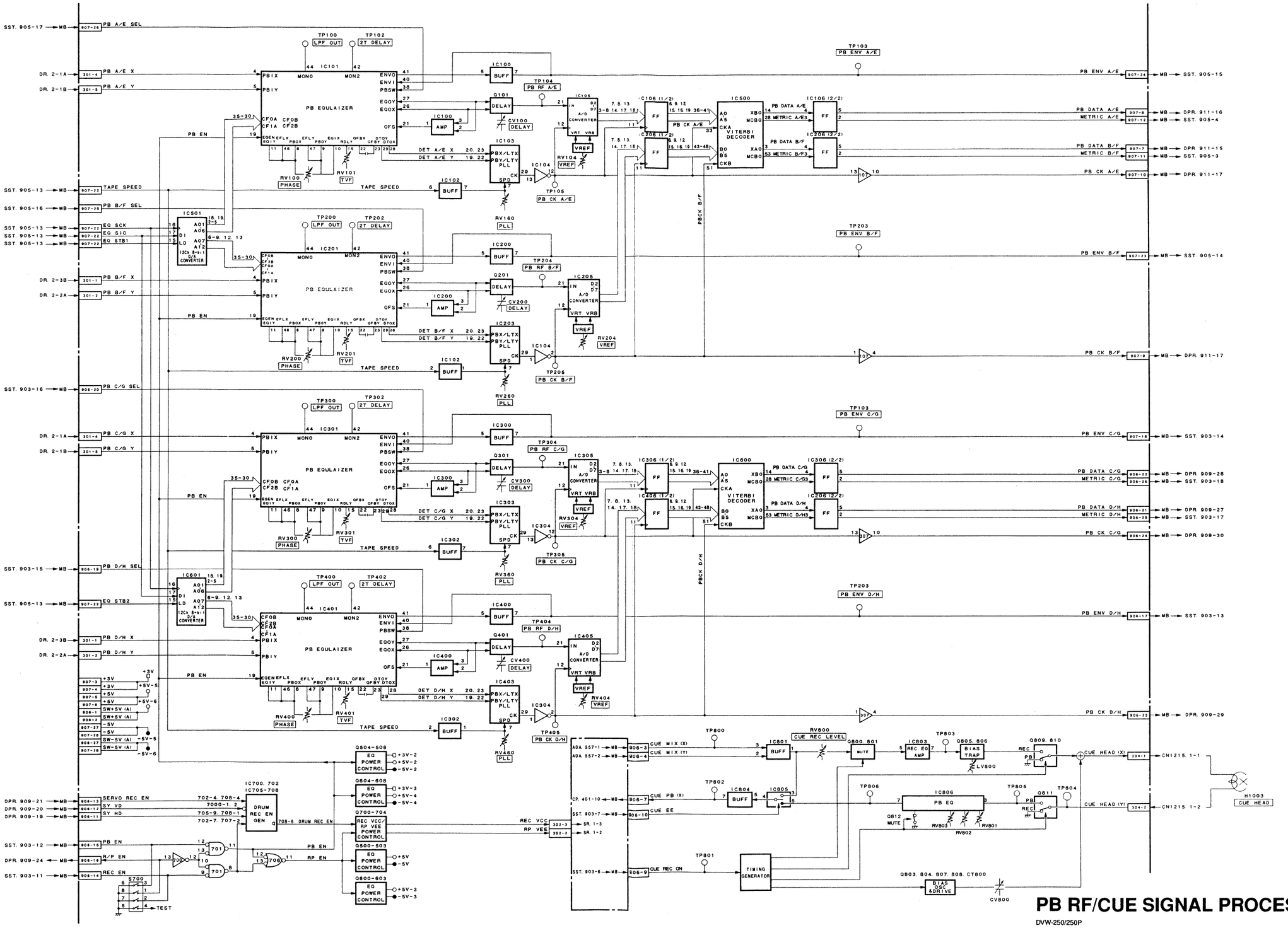

PB RF/CUE SIGNAL PROCESSING

DVW-250/250P

1-14

SYSTEM CONTROL BLOCK

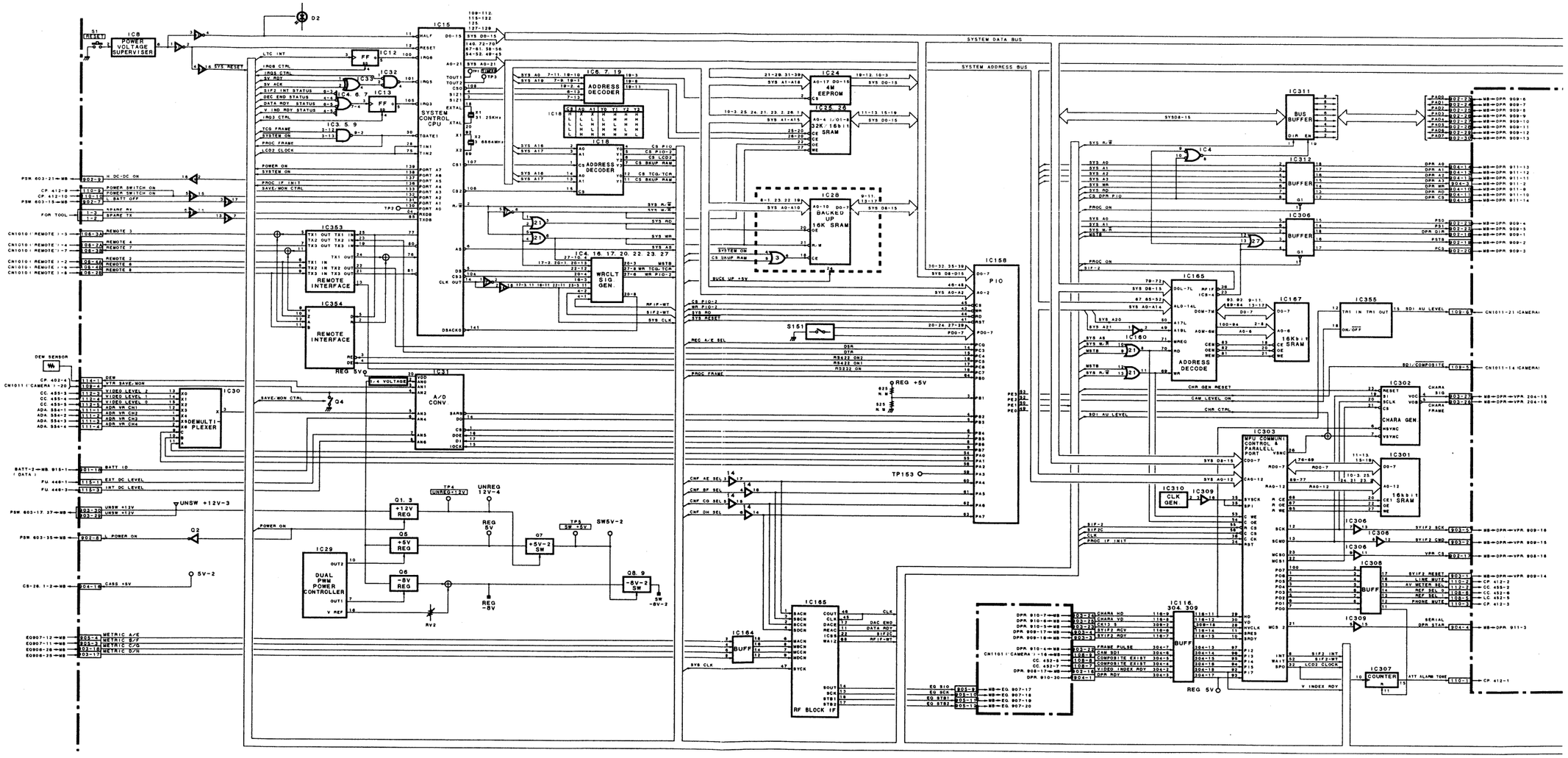

1-16

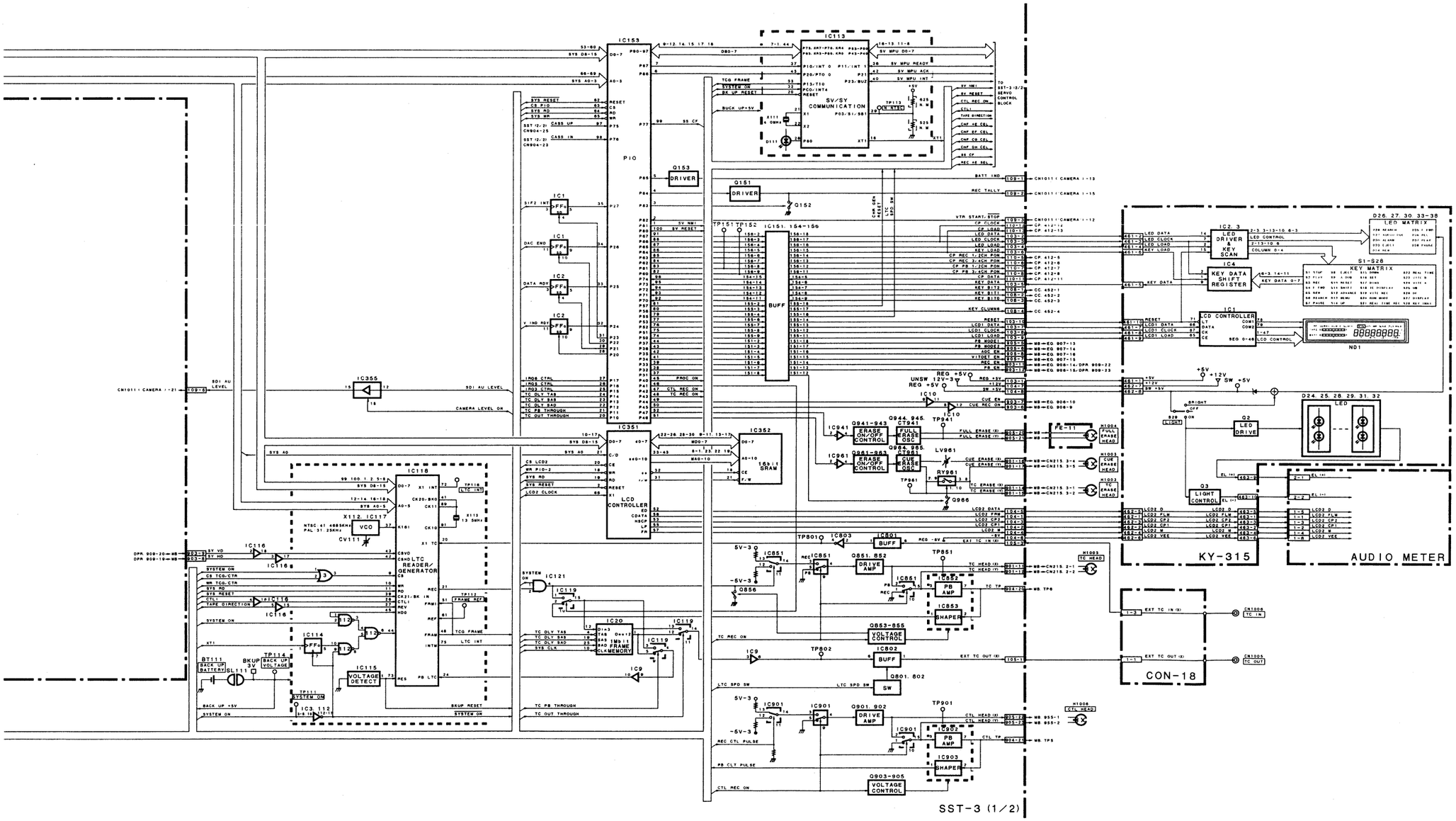

SYSTEM CONTROL BLOCK
DVW-250/250P

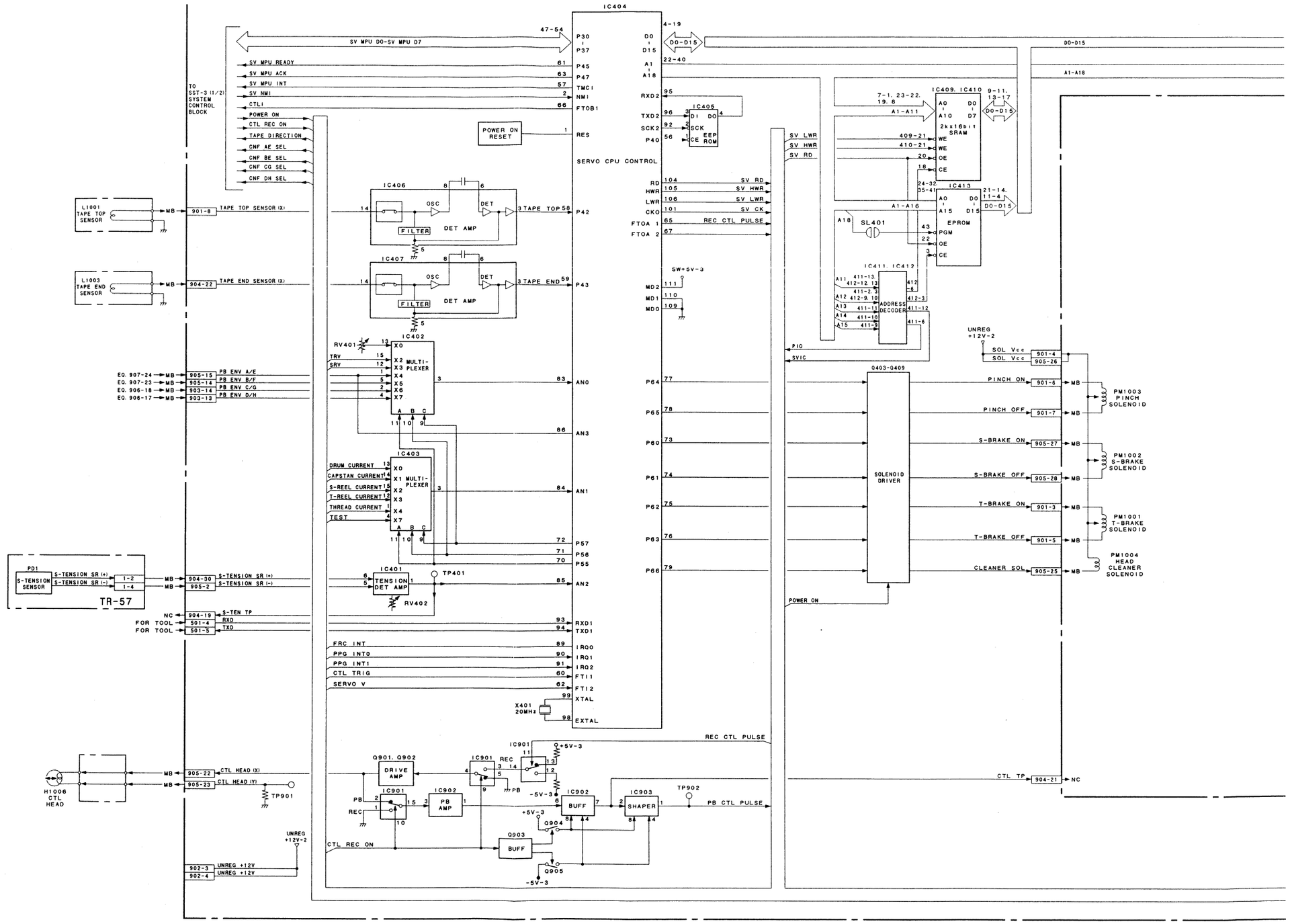
IC404
SERVO CPU CONTROL
TO SST-3 (1/2) SYSTEM CONTROL BLOCK
SV MPU D0-SV MPU D7
SV MPU READY
SV MPU ACK
SV MPU INT
SV NMI
CTL1
POWER ON
CTL REC ON
TAPE DIRECTION
CNF AE SEL
CNF BE SEL
CNF CG SEL
CNF DH SEL
POWER ON RESET
RES
L1001 TAPE TOP SENSOR
TAPE TOP SENSOR (X)
IC406
OSC
DET
FILTER
DET AMP
TAPE TOP
L1003 TAPE END SENSOR
TAPE END SENSOR (X)
IC407
TAPE END
IC402
RV401
MULTI-PLEXER
PB ENV A/E
PB ENV B/F
PB ENV C/G
PB ENV D/H
AN0
AN3
IC403
DRUM CURRENT
CAPSTAN CURRENT
S-REEL CURRENT
T-REEL CURRENT
THREAD CURRENT
TEST
AN1
IC401
TENSION DET AMP
TP401
RV402
AN2
PD1
S-TENSION SENSOR
S-TENSION SR (+)
S-TENSION SR (-)
TR-57
S-TEN TP
RXD
TXD
FOR TOOL
NC
FRC INT
PPG INT0
PPG INT1
CTL TRIG
SERVO V
IRQ0
IRQ1
IRQ2
FTI1
FTI2
XTAL
EXTAL
X401 20MHz
H1006 CTL HEAD
CTL HEAD (X)
CTL HEAD (Y)
TP901
UNREG +12V-2
UNREG +12V
Q901, Q902
DRIVE AMP
IC901
REC
PB
PB AMP
IC902
BUFF
IC903
SHAPER
TP902
PB CTL PULSE
REC CTL PULSE
CTL REC ON
Q903
Q904
Q905
+5V-3
-5V-3
SW+5V-3
RXD2
TXD2
SCK2
P40
IC405
EEP ROM
SCK
CE
SV RD
SV HWR
SV LWR
SV CK
REC CTL PULSE
FTOA 1
FTOA 2
MD2
MD1
MD0
PIO
SVIC
P64
P65
P60
P61
P62
P63
P66
0403-0409
SOLENOID DRIVER
POWER ON
IC409, IC410
2kx16bit SRAM
IC413
EPROM
SL401
IC411, IC412
ADDRESS DECODER
PINCH ON
PINCH OFF
S-BRAKE ON
S-BRAKE OFF
T-BRAKE ON
T-BRAKE OFF
CLEANER SOL
CTL TP
PM1003 PINCH SOLENOID
PM1002 S-BRAKE SOLENOID
PM1001 T-BRAKE SOLENOID
PM1004 HEAD CLEANER SOLENOID
D0-D15
A1-A18
A1-A11
A1-A16

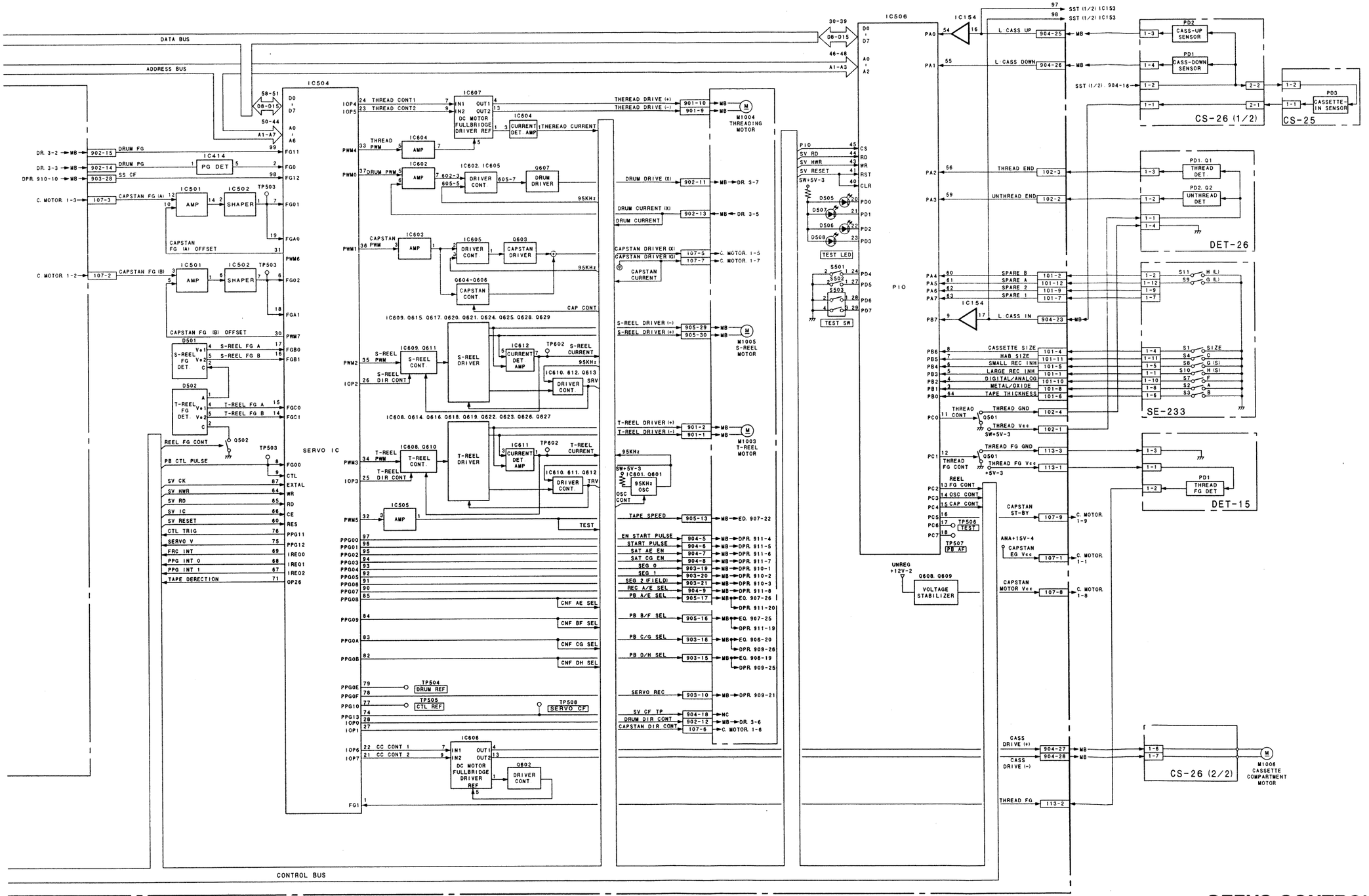

SERVO CONTROL BLOCK
DVW-250/250P

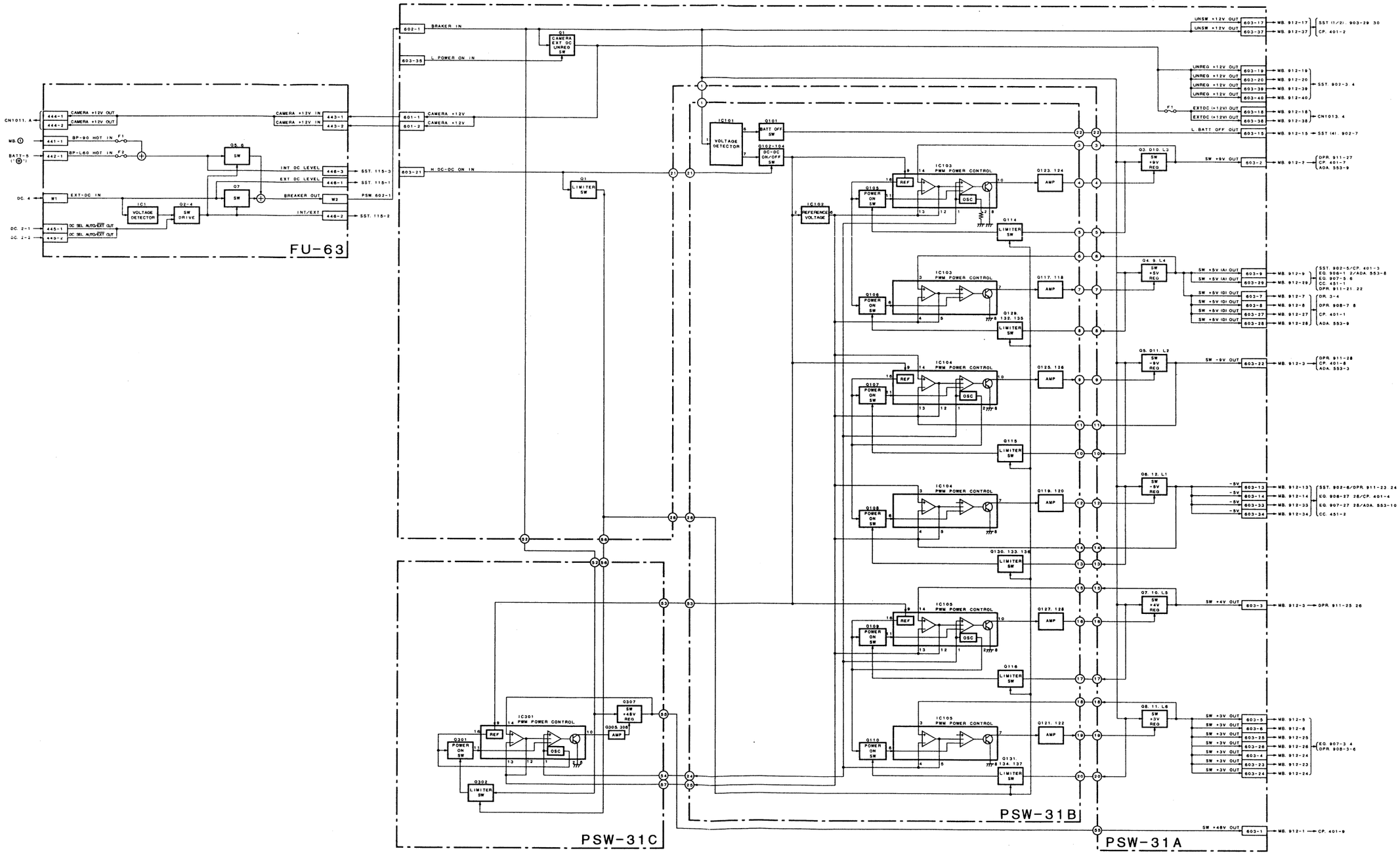
FU-63
PSW-31C
PSW-31B
PSW-31A
BRAKER IN
L POWER ON IN
H DC-DC ON IN
CAMERA +12V
CAMERA +12V IN
CAMERA +12V OUT
EXT-DC IN
DC SEL AUTO/EXT OUT
INT DC LEVEL
EXT DC LEVEL
BREAKER OUT
INT/EXT
BP-90 HOT IN
BP-L60 HOT IN
VOLTAGE DETECTOR
SW DRIVE
SW
CAMERA EXT DC UNREG SW
LIMITER SW
BATT OFF SW
DC-DC ON/OFF SW
REFERENCE VOLTAGE
PWM POWER CONTROL
REF
OSC
POWER ON SW
AMP
SW +9V REG
SW +5V (A) REG
SW +5V (D) REG
SW -9V REG
SW +8V REG
SW +4V REG
SW +3V REG
UNSW +12V OUT
UNREG +12V OUT
EXTDC (+12V) OUT
L BATT OFF OUT
SW +9V OUT
SW +5V (A) OUT
SW +5V (D) OUT
SW -9V OUT
-8V
SW +4V OUT
SW +3V OUT
SW +48V OUT

Section 2
Board Layouts

INDEX

System	Board name	Circuit function	Page
VIDEO	CC-66	Video Input/Output	2-2
	VPR-12	Video Signal Processor (AD/DA)	2-3
	DIF-31	4:2:2 Component Serial Digital Interface	2-4
AUDIO	CP-260	Audio Input/Output, Panel Switches	2-5
	ADA-44	Audio Signal Processor (AD/DA)	2-6
	CON-18	TC IN/OUT Connectors	2-6
	VR-194	Audio Rec Level Selector (Preset/Variable)	2-7
	DUS-339	Head Phone Connector	2-7
	VR-205	Phone Level Control	2-7
	VR-206	Audio Rec Level Control	2-7
DIGITAL PROCESS	DPR-62	Digital Data Processor (Encode/Decode, Error Correction) Ref CK Generator, Data Rate Converter Rec Current Control, Rec Envelope Detector	2-8
	APR-20	Audio Signal Processor (Limiter)	2-10
RF & CUE	EQ-54	RF Equalizer (PB EQ, PB Envelope Detector) Cue Rec/PB	2-10
SERVO, SYSTEM CONTROL, TIMECODE	KY-315	Panel Switches	2-11
	SST-3	Servo & System Control, Timecode Full Erase & Channel Erase Oscillator	2-12
	SE-233	Sensor (Casette Coding)	2-14
	DET-15	Cassette In Detector	2-14
	DET-26	Sensor (Thread/Unthread)	2-14
	CS-25	Cassette Up/Down Detector	2-15
	CS-26	Cassette Up/Down Detector	2-15
	TR-57	S-Tension Detector	2-15
MOTHER BOARD	MB-601	Mother Board	2-16
POWER SUPPLY	FU-63	Fuse	2-17
	DC-85	DC Input Select Switch	2-17
	PSW-31A	DC-DC Converter	2-18
	PSW-31B	DC-DC Converter	2-18
	PSW-31C	DC-DC Converter	2-18

2-1

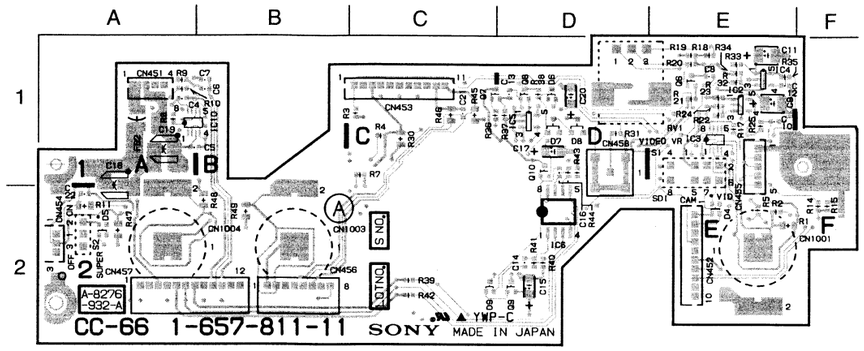

CC-66 - A SIDE -
1-657 811 11

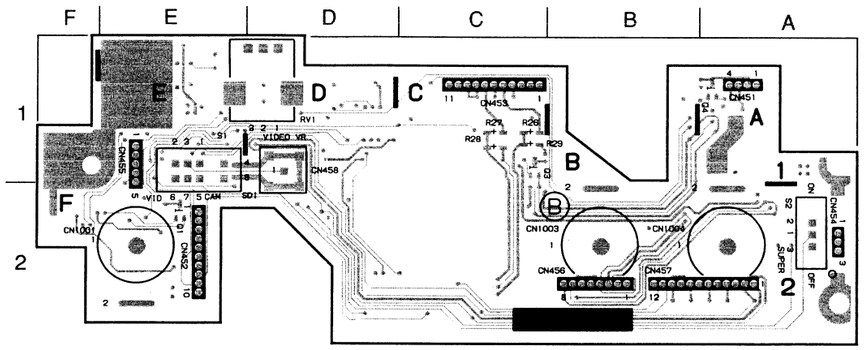

CC-66 - B SIDE -
1-657-811-11

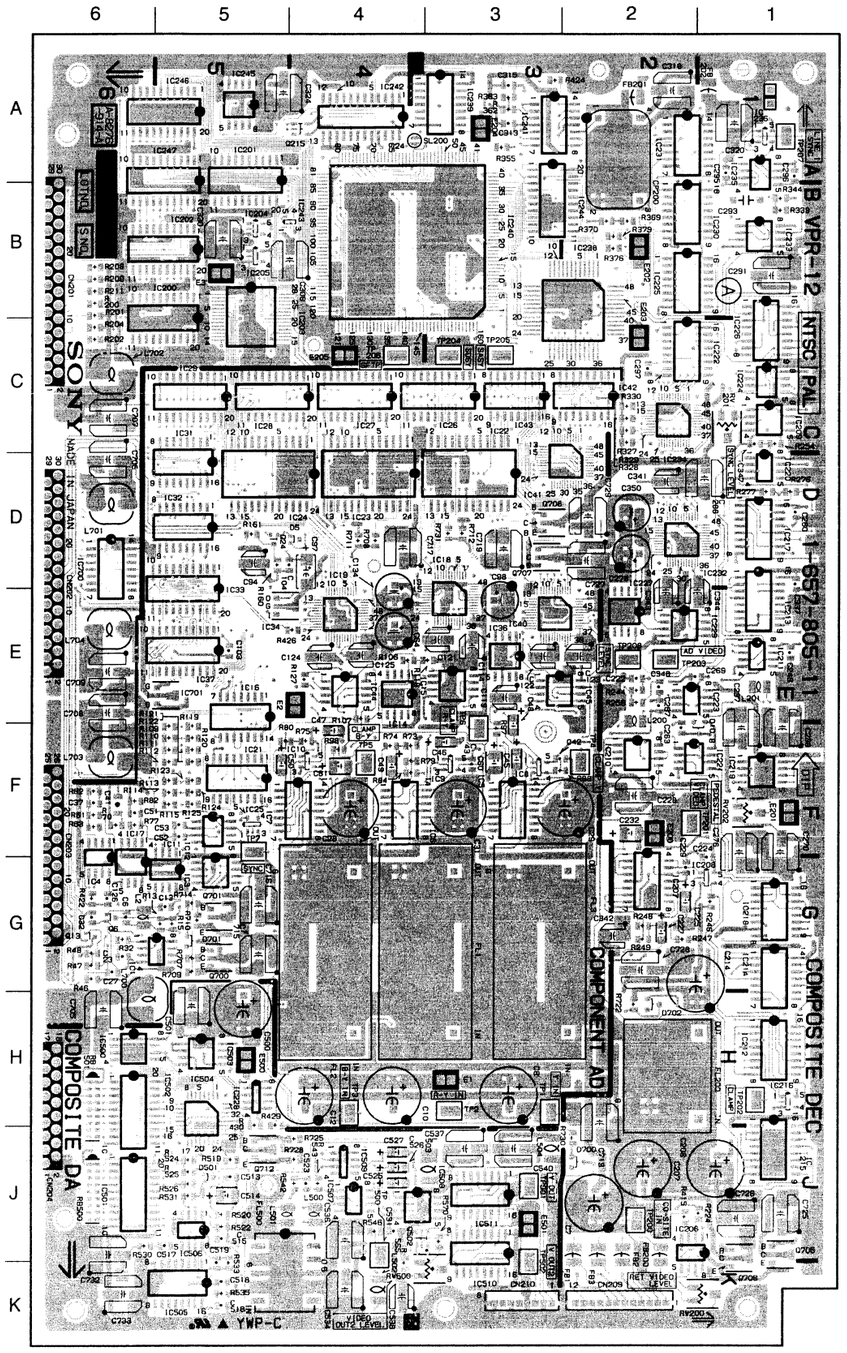

VPR-12 - A SIDE -
1-657-805-11

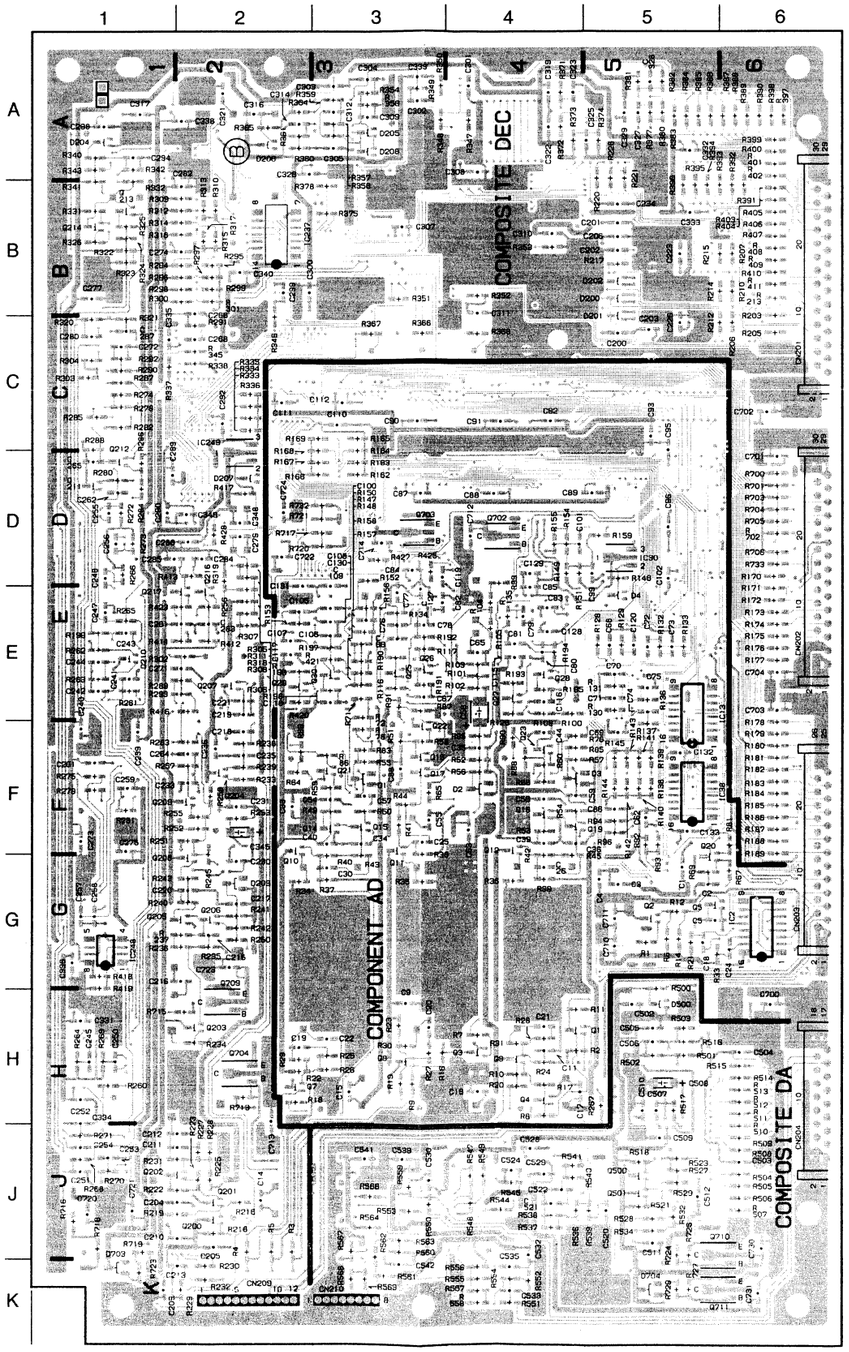

VPR-12 - B SIDE -
1-657-805-11

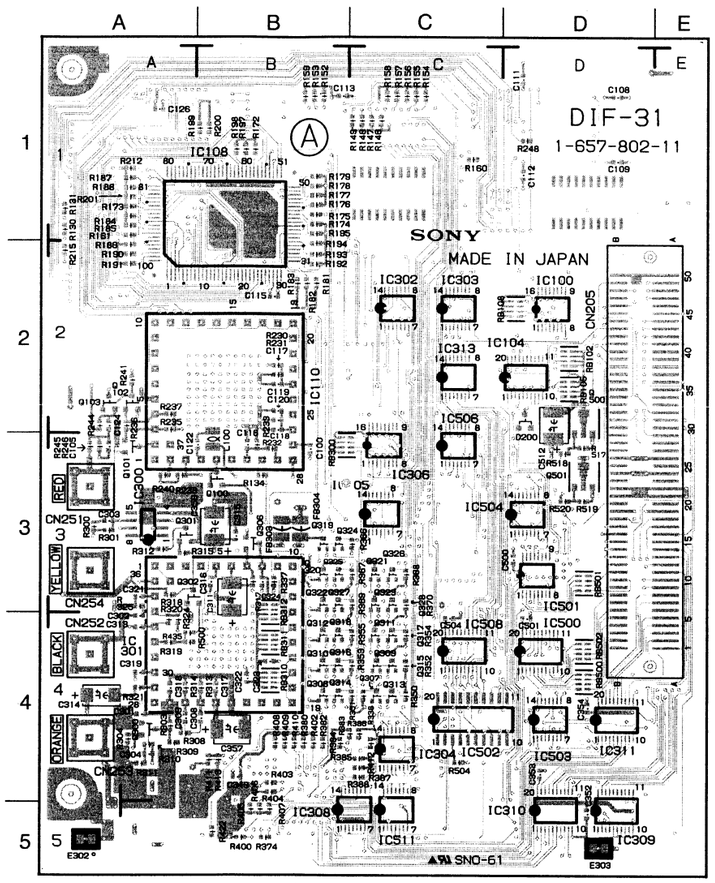

DIF-31 - A SIDE -
1-657-802-11

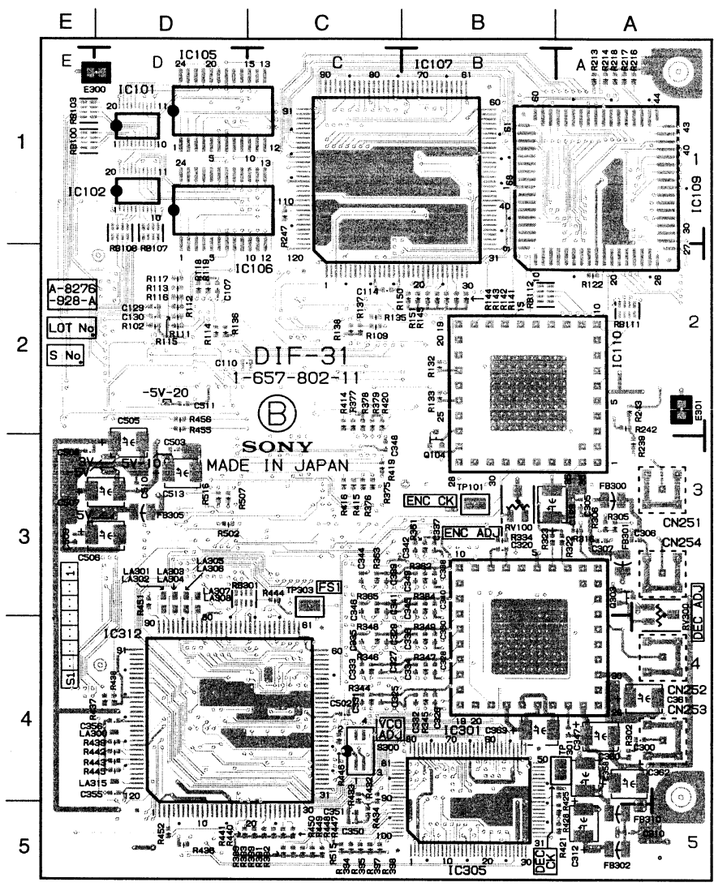

DIF-31 - B SIDE -
1-657-802-11

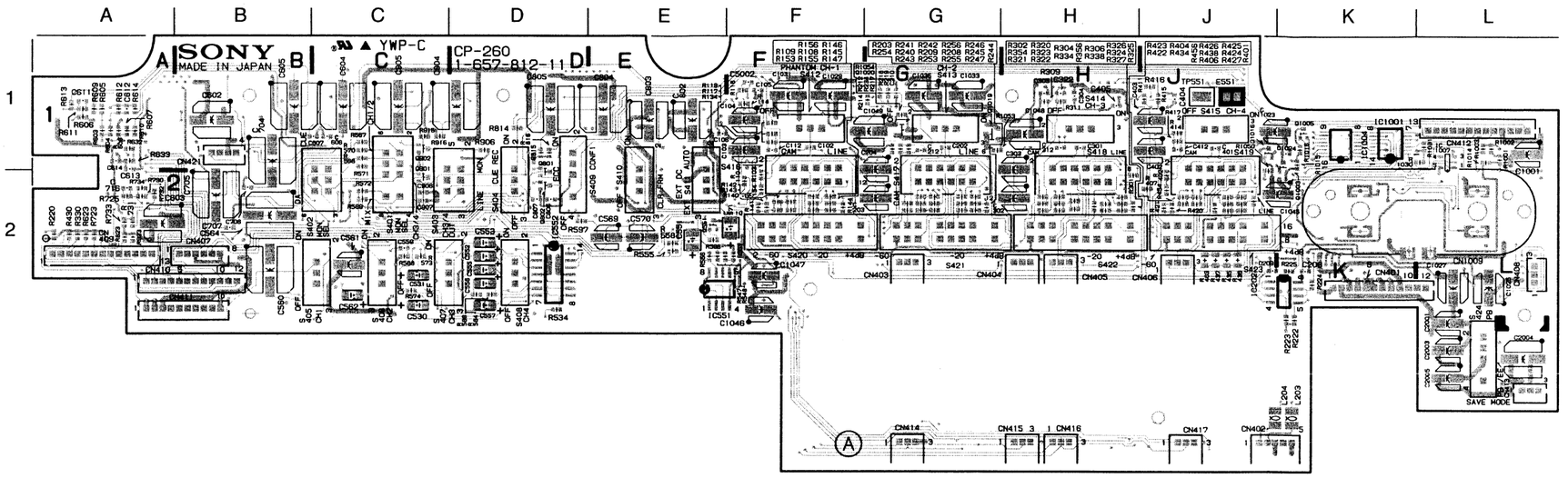

CP-260 - A SIDE -
1-657-812-11

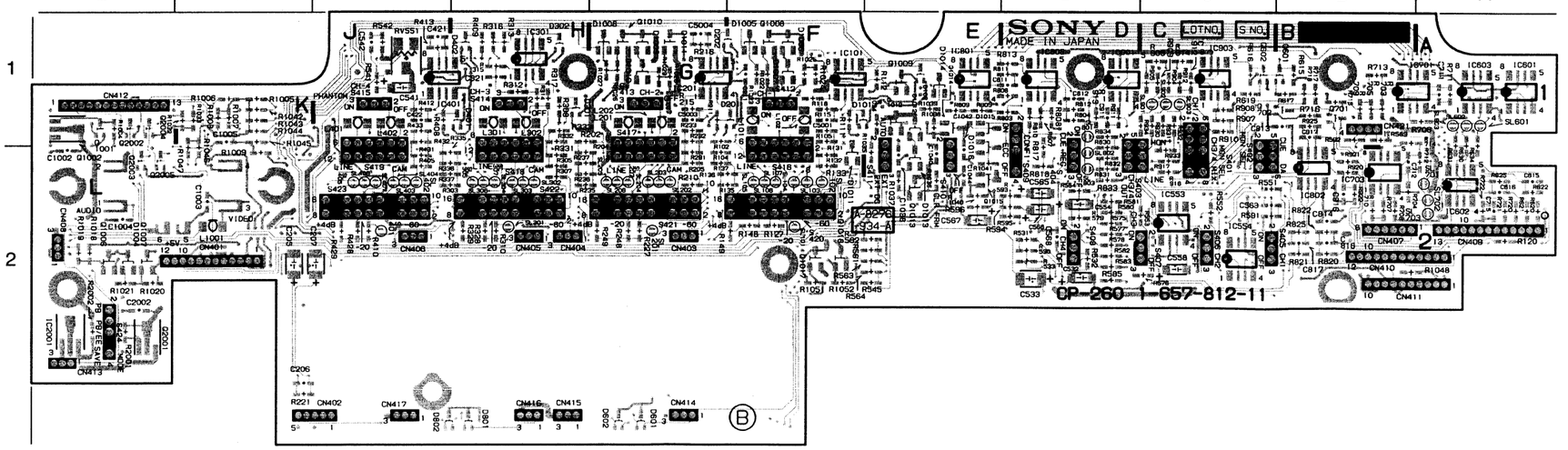

CP-260 - B SIDE -
1-657-812-11

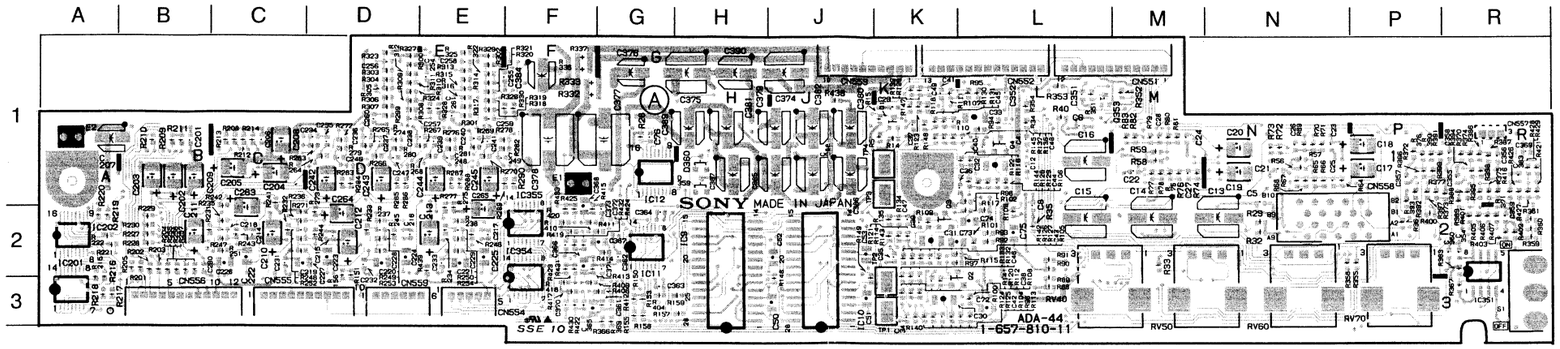

ADA-44 - A SIDE -
1-657-810-11

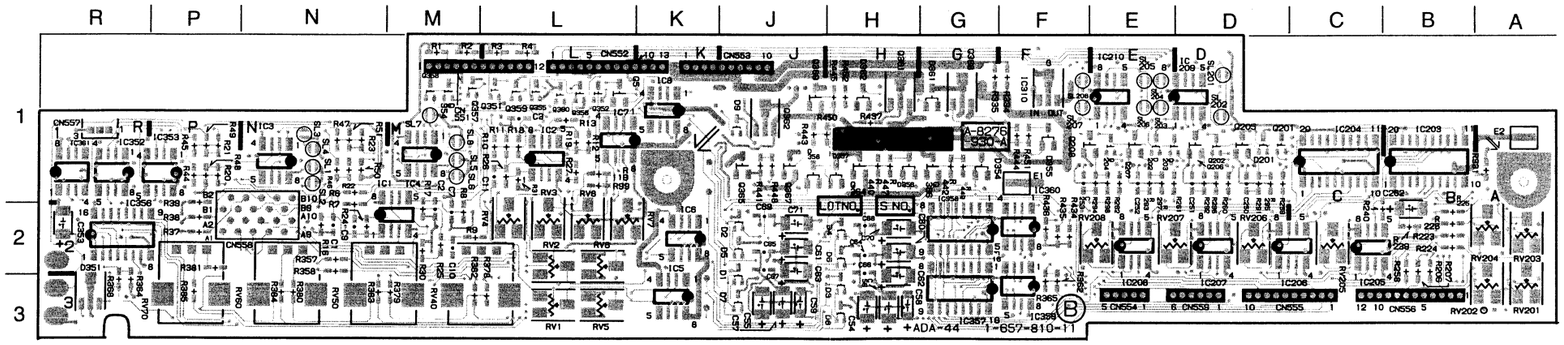

ADA-44 - B SIDE -
1-657-810-11

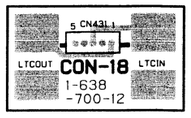

CON-18 - A SIDE -
1-638-700-12

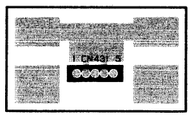

CON-18 - B SIDE -
1-638-700-12

VR-194/205/206, DUS-339

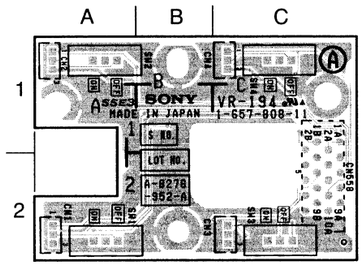

VR-194 - A SIDE -
1-657-808-11

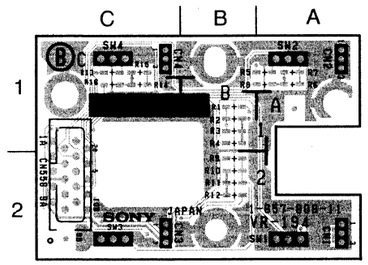

VR-194 - B SIDE -
1-657-808-11

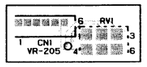

VR-205 - A SIDE -
1-657-814-11

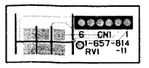

VR-205 - B SIDE -
1-657-814-11

VR-206 - A SIDE -
1-657-809-11

VR-206 - B SIDE -
1-657-809-11

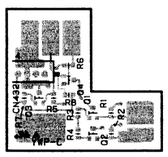

DUS-339 - A SIDE -
1-638-694-13

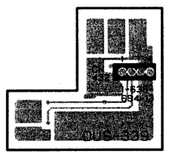

DUS-339 - B SIDE -
1-638-694-13

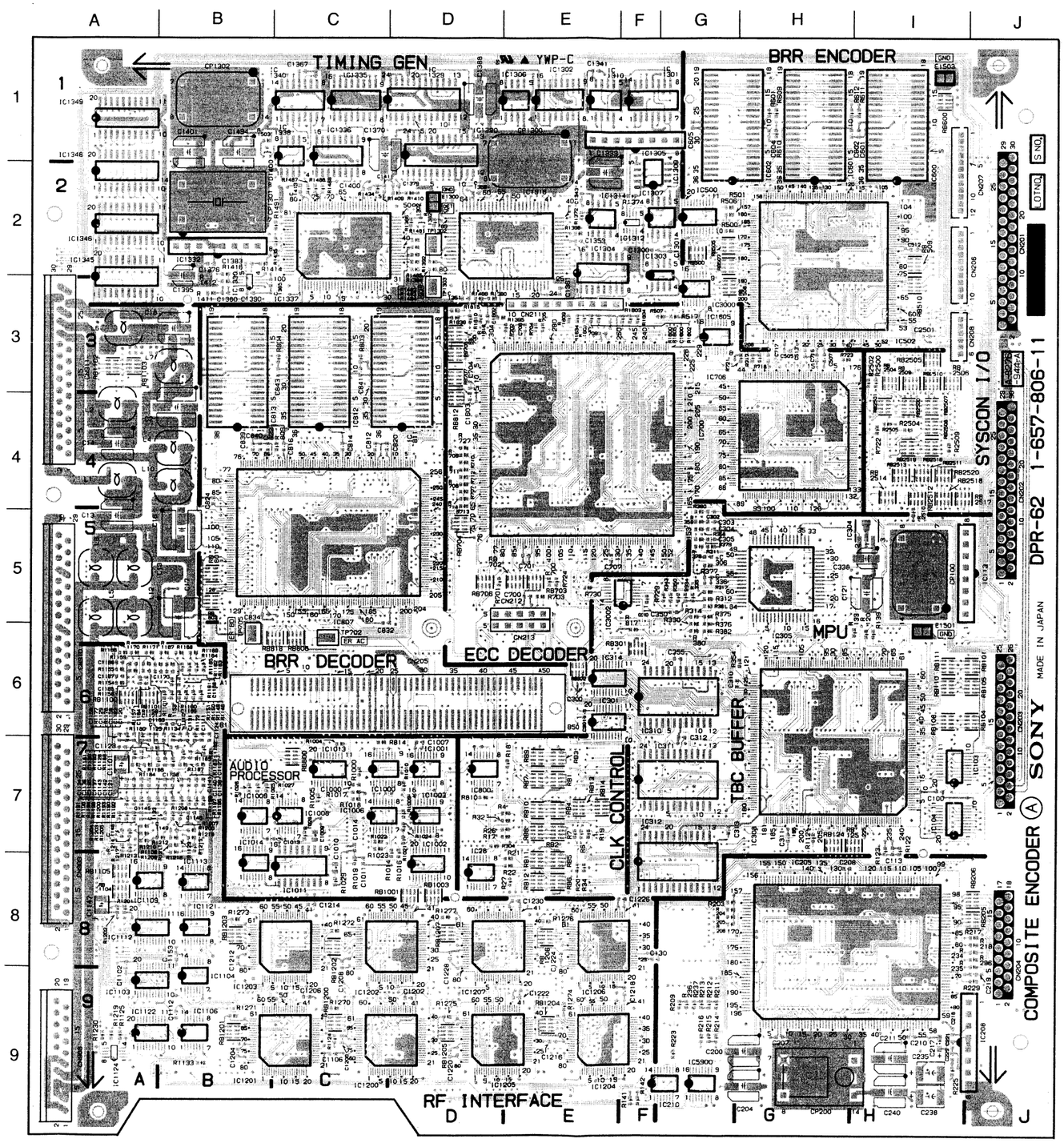

DPR-62 - A SIDE -
1-657-806-11

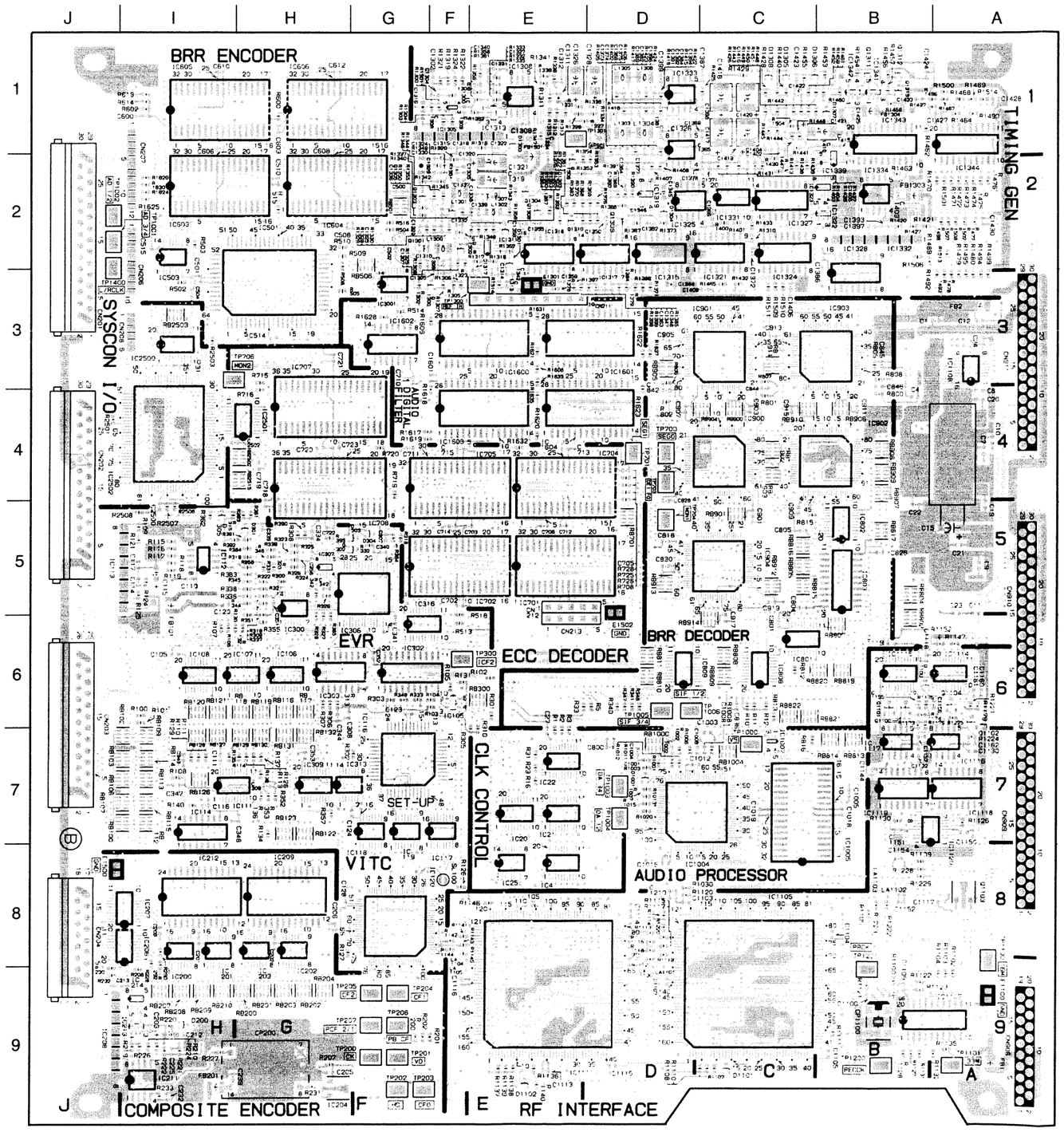

DPR-62 - B SIDE -
1-657-806-11

APR-20, EQ-54

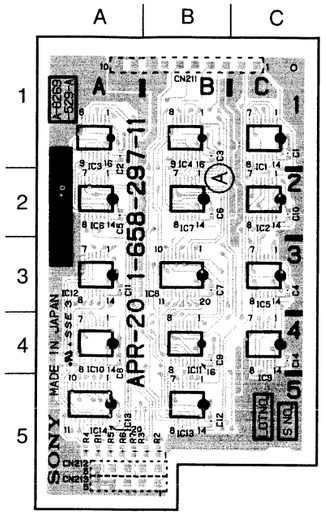

APR-20 - A SIDE -
1-658-297-11

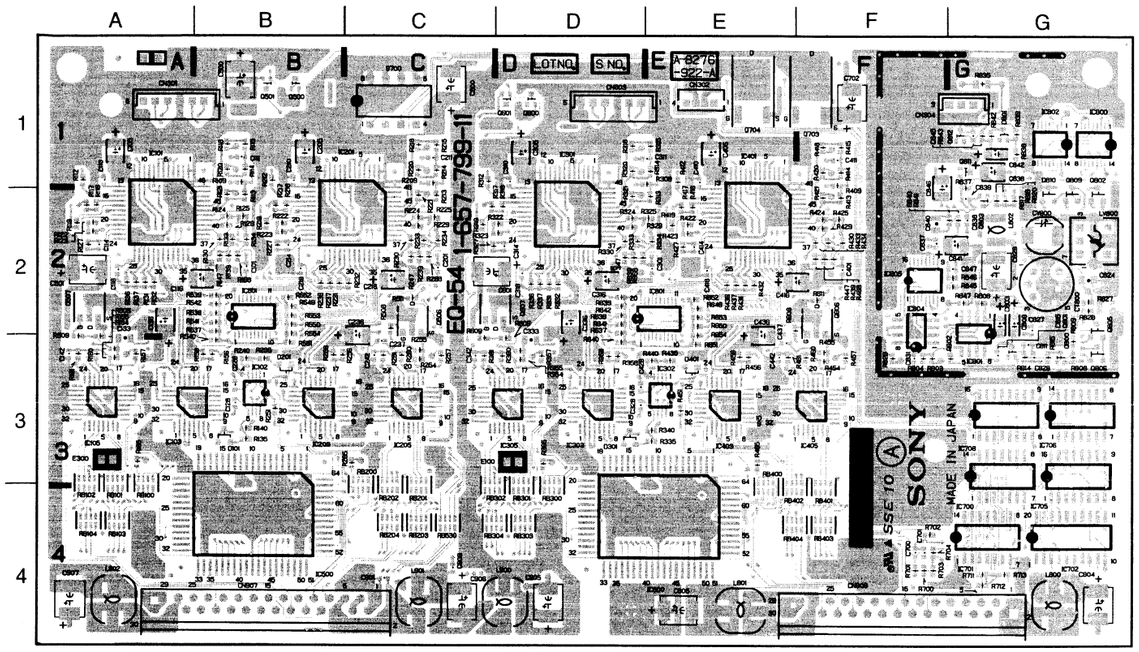

EQ-54 - A SIDE -
1-657-799-11

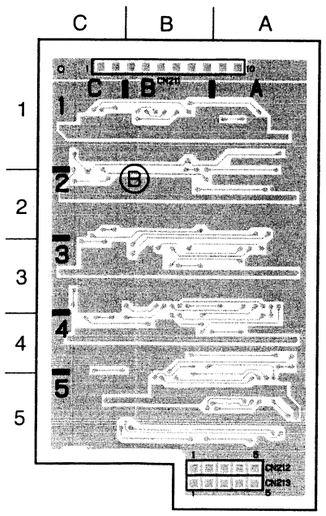

APR-20 - B SIDE -
1-658-297-11

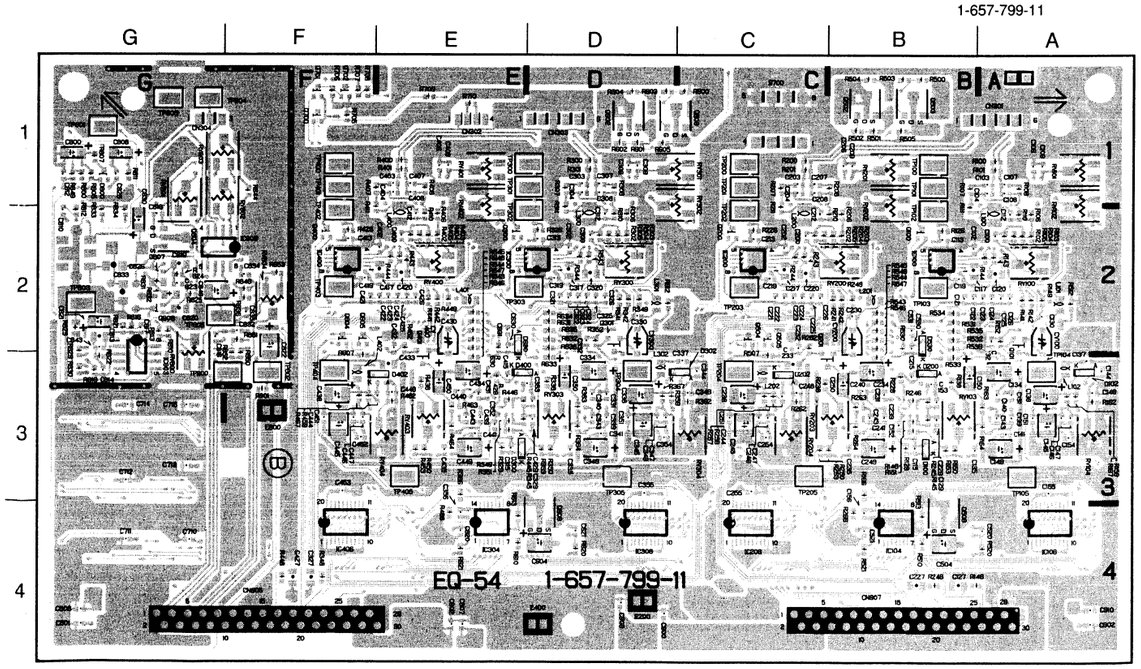

EQ-54 - B SIDE -
1-657-799-11

2-10

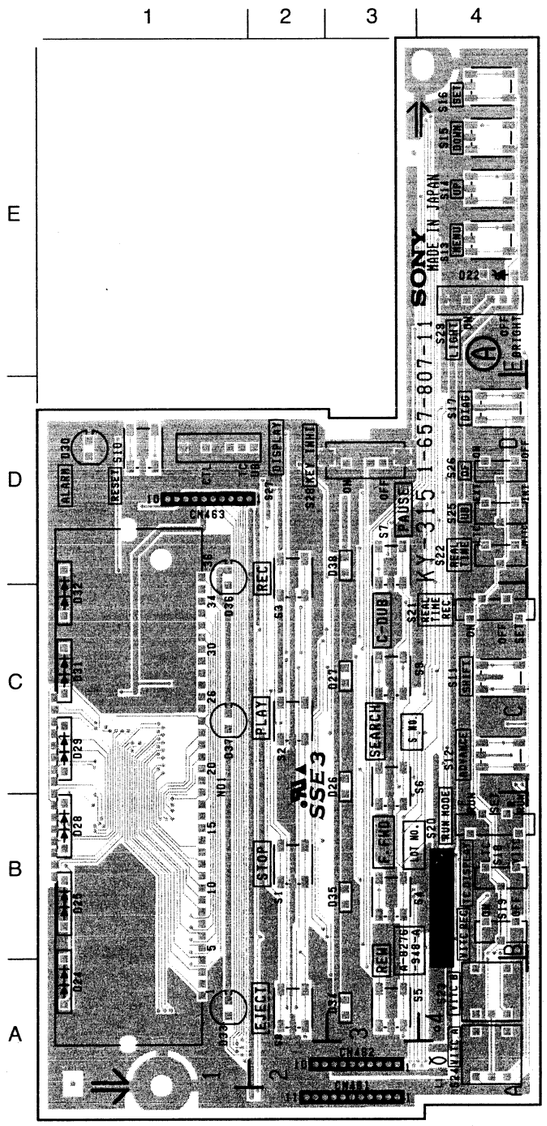

KY-315 - A SIDE -
1-657-807-11

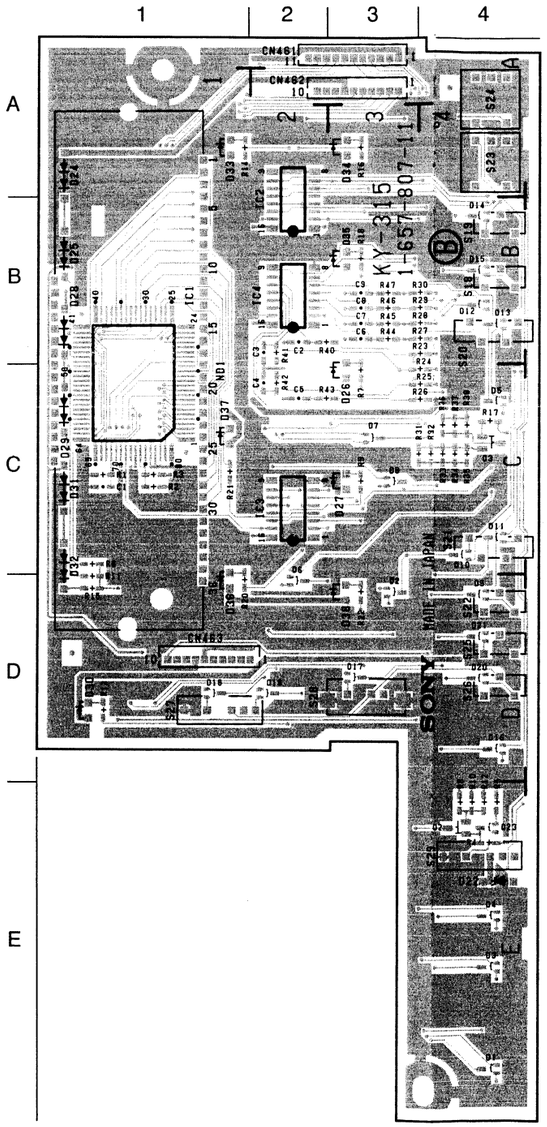

KY-315 - B SIDE -
1-657-807-11

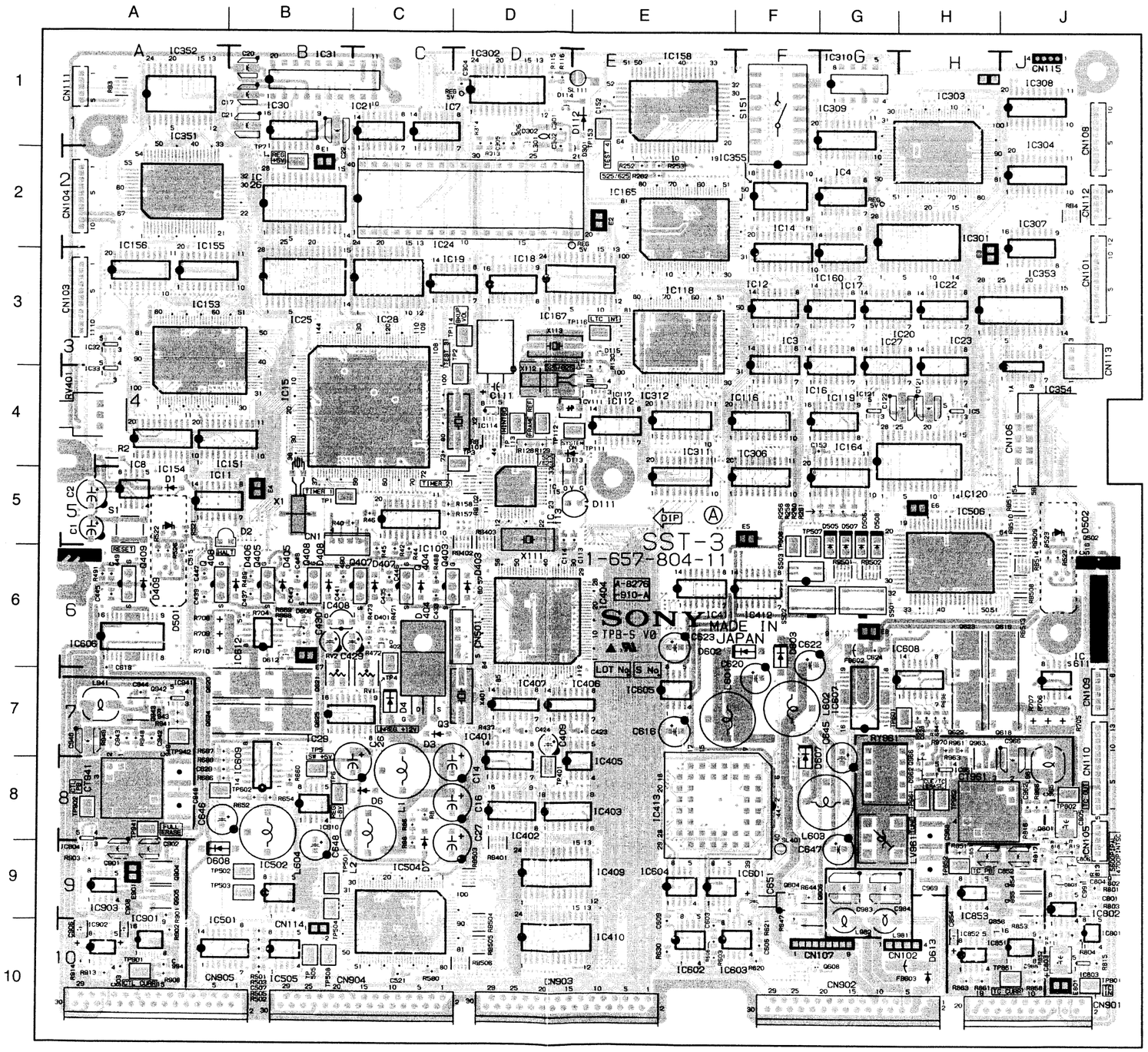

SST-3 - A SIDE -
1-657-804-11

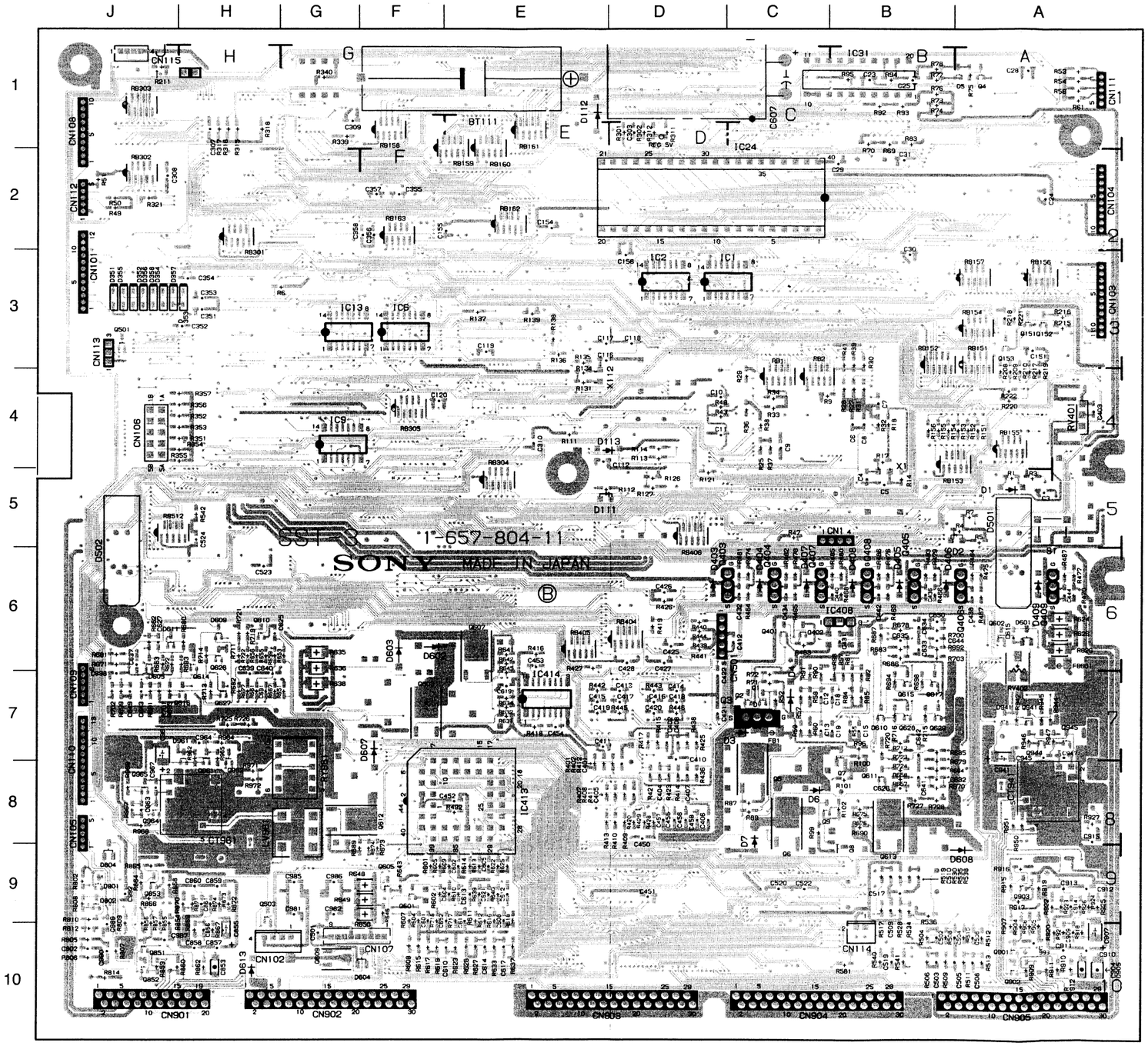

SST-3 - B SIDE -
1-657-804-11

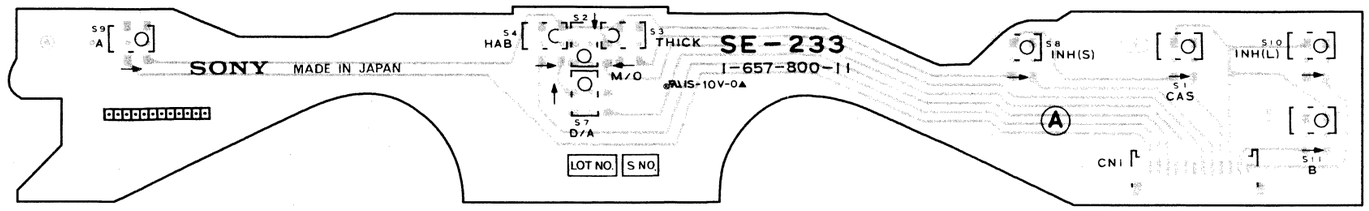

SE-233 - A SIDE -
1-657-800-11

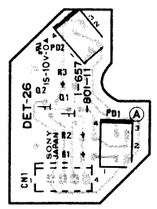

DET-26 - A SIDE -
1-657-801-11,-12

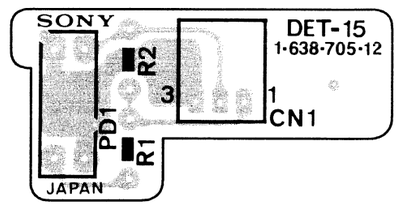

DET-15 - A SIDE -
1-638-705 -12

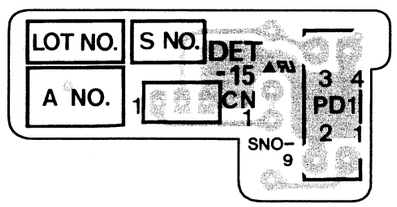

DET-15 - B SIDE -
1-638-705 -12

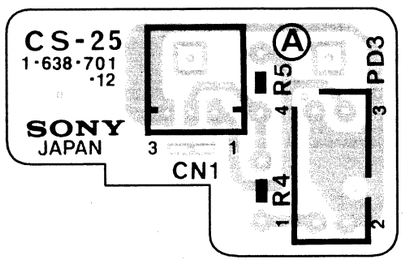

CS-25 - A SIDE -
1-638-701-12

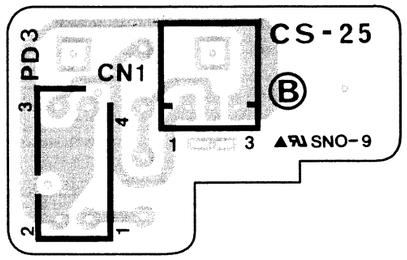

CS-25 - B SIDE -
1-638-701-12

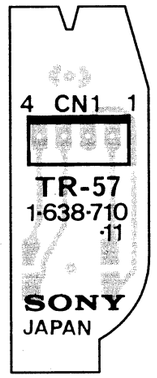

TR-57 - A SIDE -
1-638-710-11

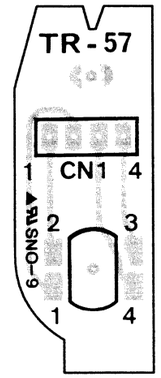

TR-57 - B SIDE -
1-638-710-11

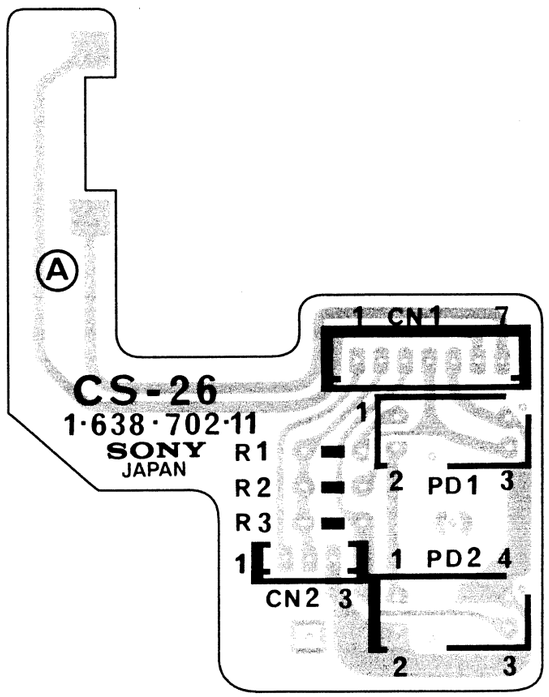

CS-26 - A SIDE -
1-638-702-11

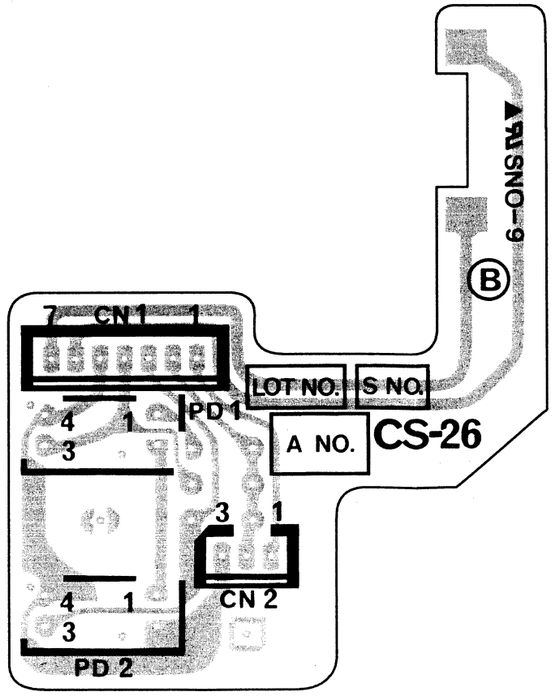

CS-26 - B SIDE -
1-638-702-11

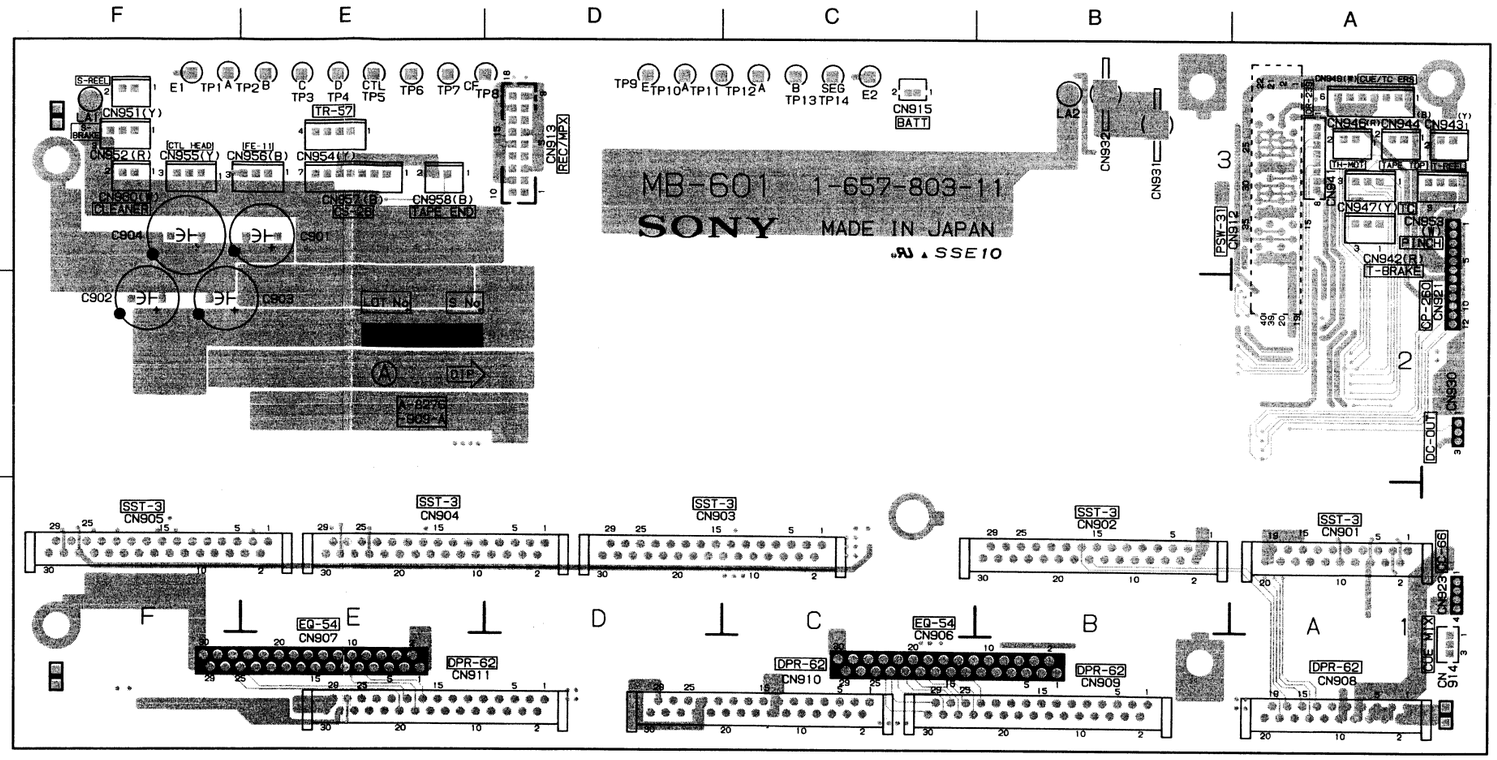

MB-601 - A SIDE -
1-657-803-11

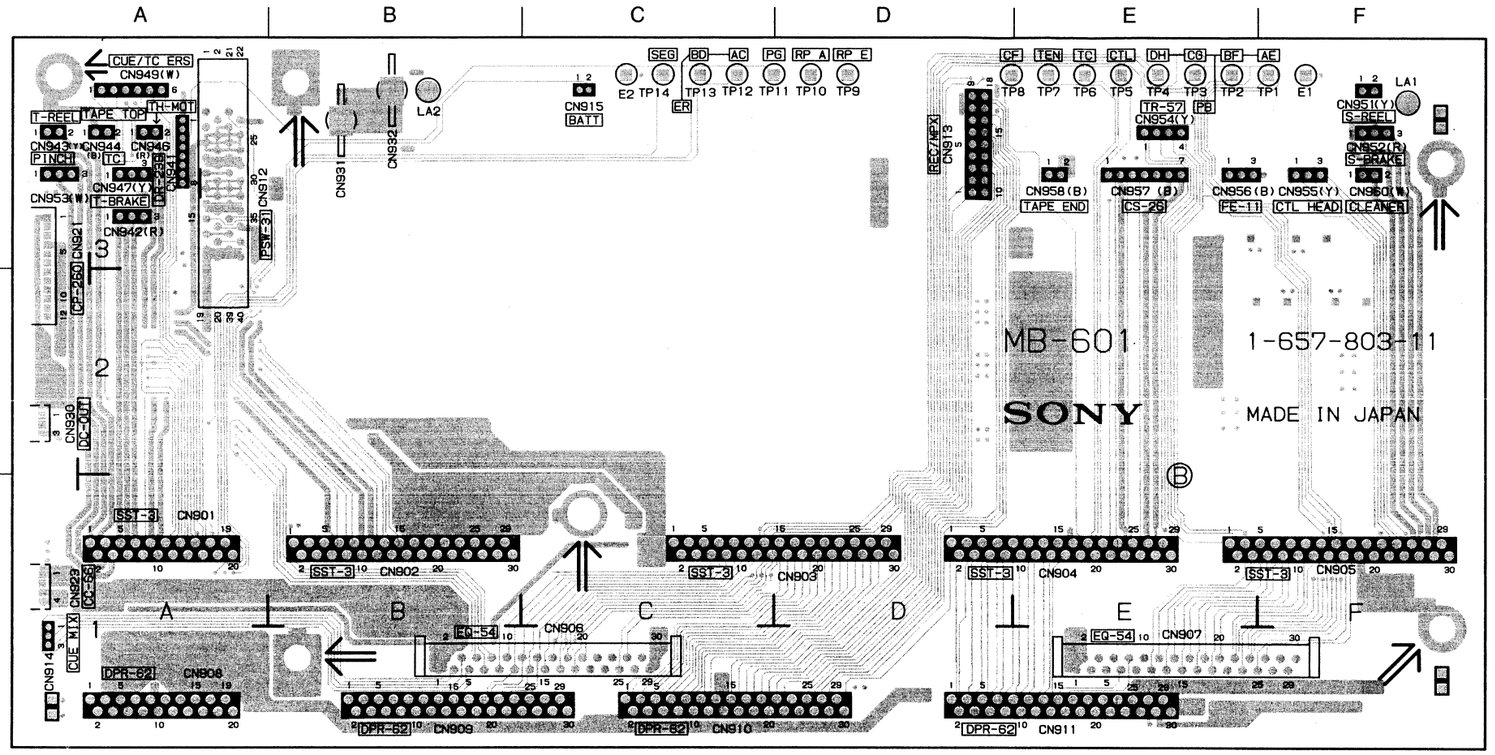

MB-601 - B SIDE -
1-657-803-11

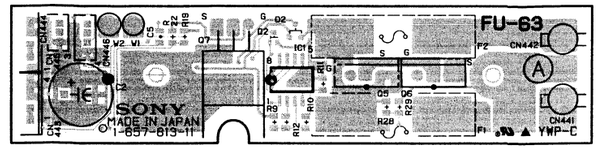

FU-63 - A SIDE -
1-657-813-11

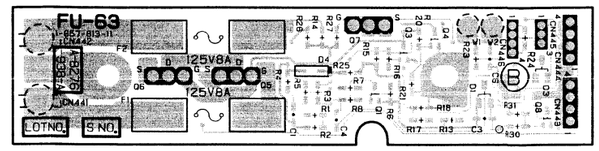

FU-63 - B SIDE -
1-657-813-11

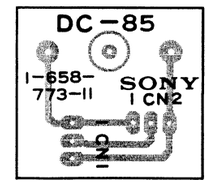

DC-85 - A SIDE -
1-658-773-11

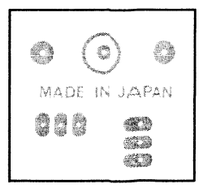

DC-85 - B SIDE -
1-658-773-11

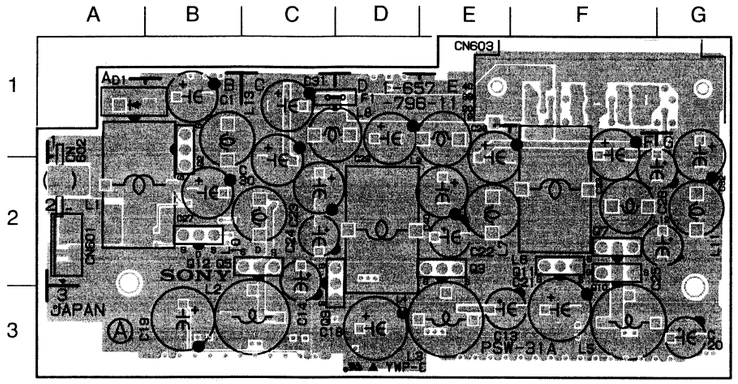

PSW-31A - A SIDE -
1-657-796-11

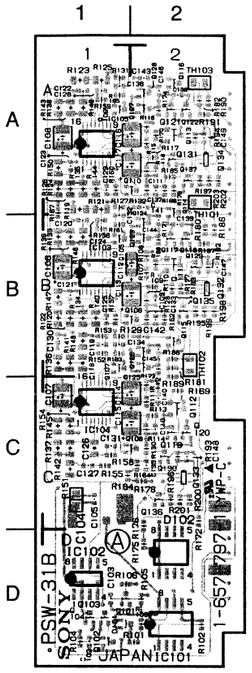

PSW-31B - A SIDE -
1-657-797-11

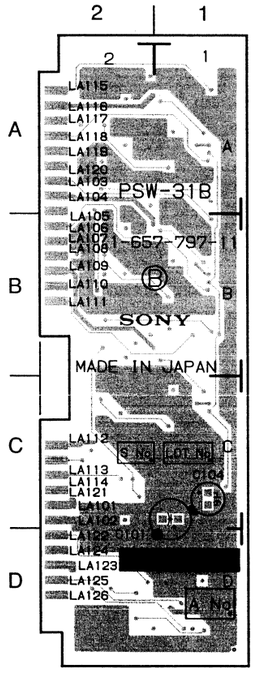

PSW-31B - B SIDE -
1-657-797-11

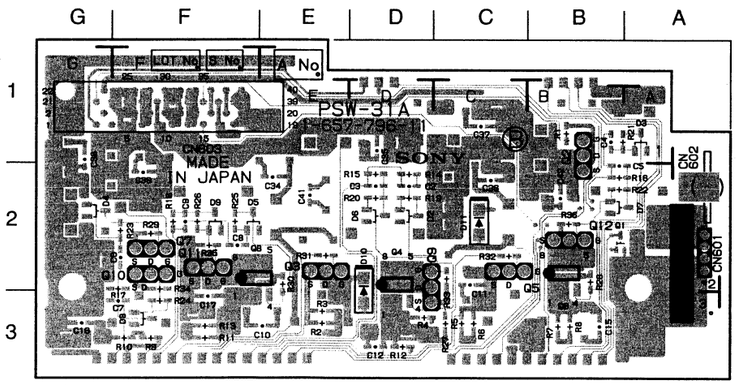

PSW-31A - B SIDE -
1-657-796-11

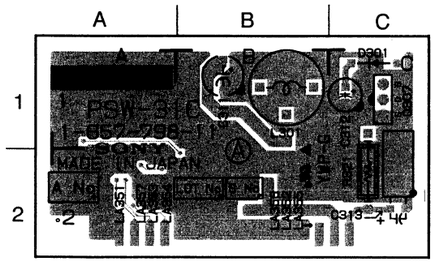

PSW-31C - A SIDE -
1-657-798-11

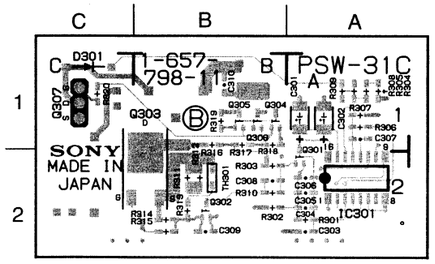

PSW-31C - B SIDE -
1-657-798-11

Section 3
Schematic Diagrams

INDEX

System	Board name	Circuit function	Page
FRAME WIRING			3-2
VIDEO	CC-66	Video Input/Output	3-6
	VPR-12	Video Signal Processor (AD/DA)	3-8
	DIF-31	4:2:2 Component Serial Digital Interface	3-20
AUDIO	CP-260	Audio Input/Output, Panel Switches	3-26
	ADA-44	Audio Signal Processor (AD/DA)	3-32
	CON-18	TC IN/OUT Connectors	3-2
	VR-194	Audio Rec Level Selector (Preset/Variable)	3-38
	DUS-339	Head Phone Connector	3-38
	VR-205	Phone Level Control	3-2
	VR-206	Audio Rec Level Control	3-2
DIGITAL PROCESS	DPR-62	Digital Data Processor (Encode/Decode, Error Correction) Ref CK Generator, Data Rate Converter Rec Current Control, Rec Envelope Detector	3-40
	APR-20	Audio Signal Processor (Limiter)	3-68
RF & CUE	EQ-54	RF Equalizer (PB EQ, PB Envelope Detector) Cue Rec/PB	3-70
SERVO, SYSTEM CONTROL, TIMECODE	KY-315	Panel Switches	3-94
	SST-3	Servo & System Control, Timecode Full Erase & Channel Erase Oscillator	3-76
	SE-233	Sensor (Casette Coding)	3-96
	DET-15	Cassette In Detector	3-96
	DET-26	Sensor (Thread/Unthread)	3-96
	CS-25	Cassette Up/Down Detector	3-97
	CS-26	Cassette Up/Down Detector	3-97
	TR-57	S-Tension Detector	3-97
MOTHER BOARD	MB-601	Mother Board	3-104
POWER SUPPLY	FU-63	Fuse	3-102
	DC-85	DC Input Select Switch	3-102
	PSW-31A	DC-DC Converter	3-98
	PSW-31B	DC-DC Converter	3-100
	PSW-31C	DC-DC Converter	3-101

3-1

FRAME WIRING (1/2)

FRAME WIRING (1/2)

DVW-250 (J)
DVW-250 (UC)
DVW-250P (SY)

DRUM ASSY (1/2)

DR-239 (1/2)

SR-56

EQ-54 (1/2)

CC-66

VPR-12

VR-194

VR-206
1-657-809-11

ADA-44

DPR-62 (1/2)

3-2

FRAME WIRING (1/2)

FRAME WIRING (1/2)

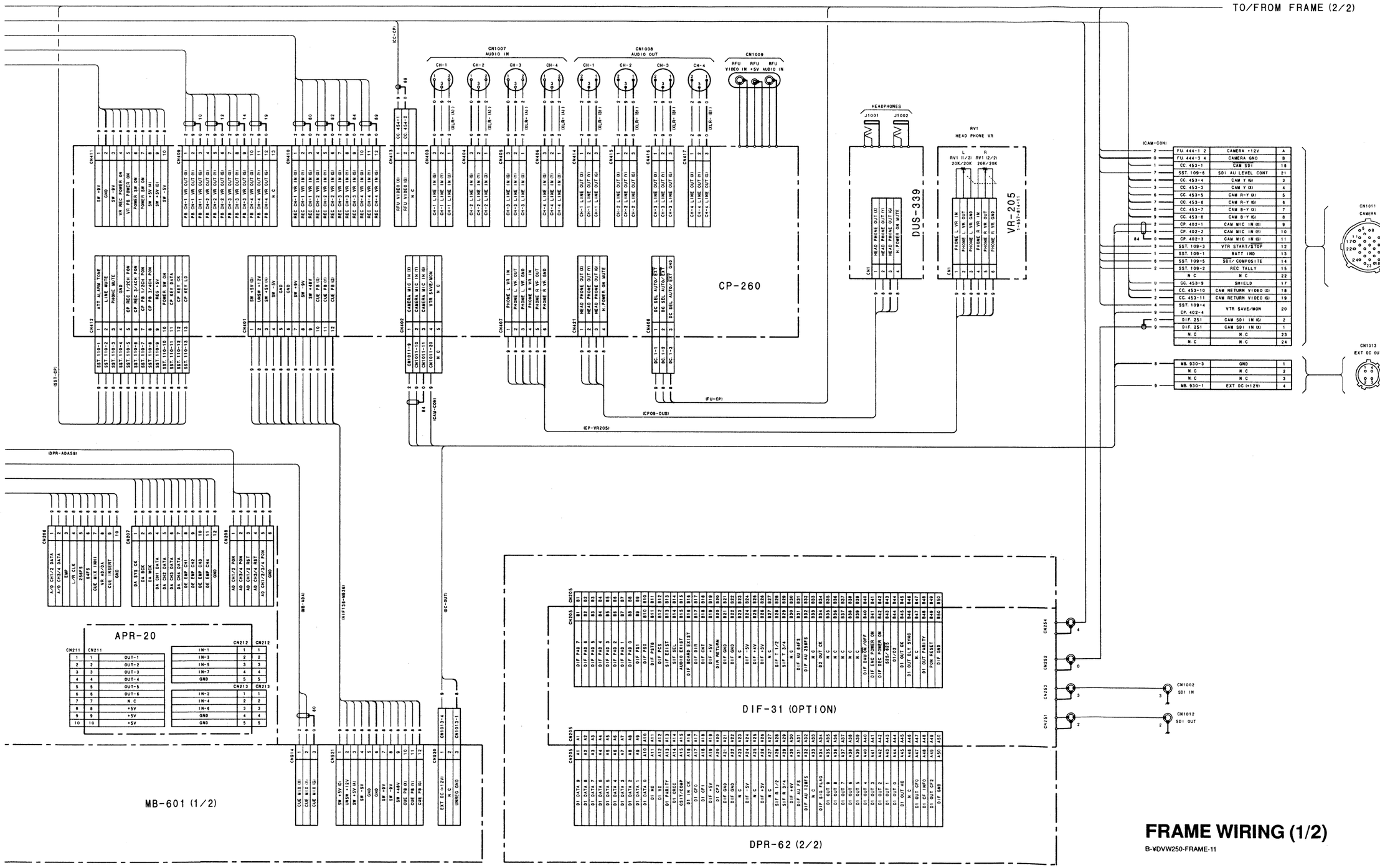

FRAME WIRING (1/2)

B-VDVW250-FRAME-11

FRAME WIRING (2/2)

DVW-250 (J)
DVW-250 (UC)
DVW-250P (SY)

TO/FROM FRAME (1/2)

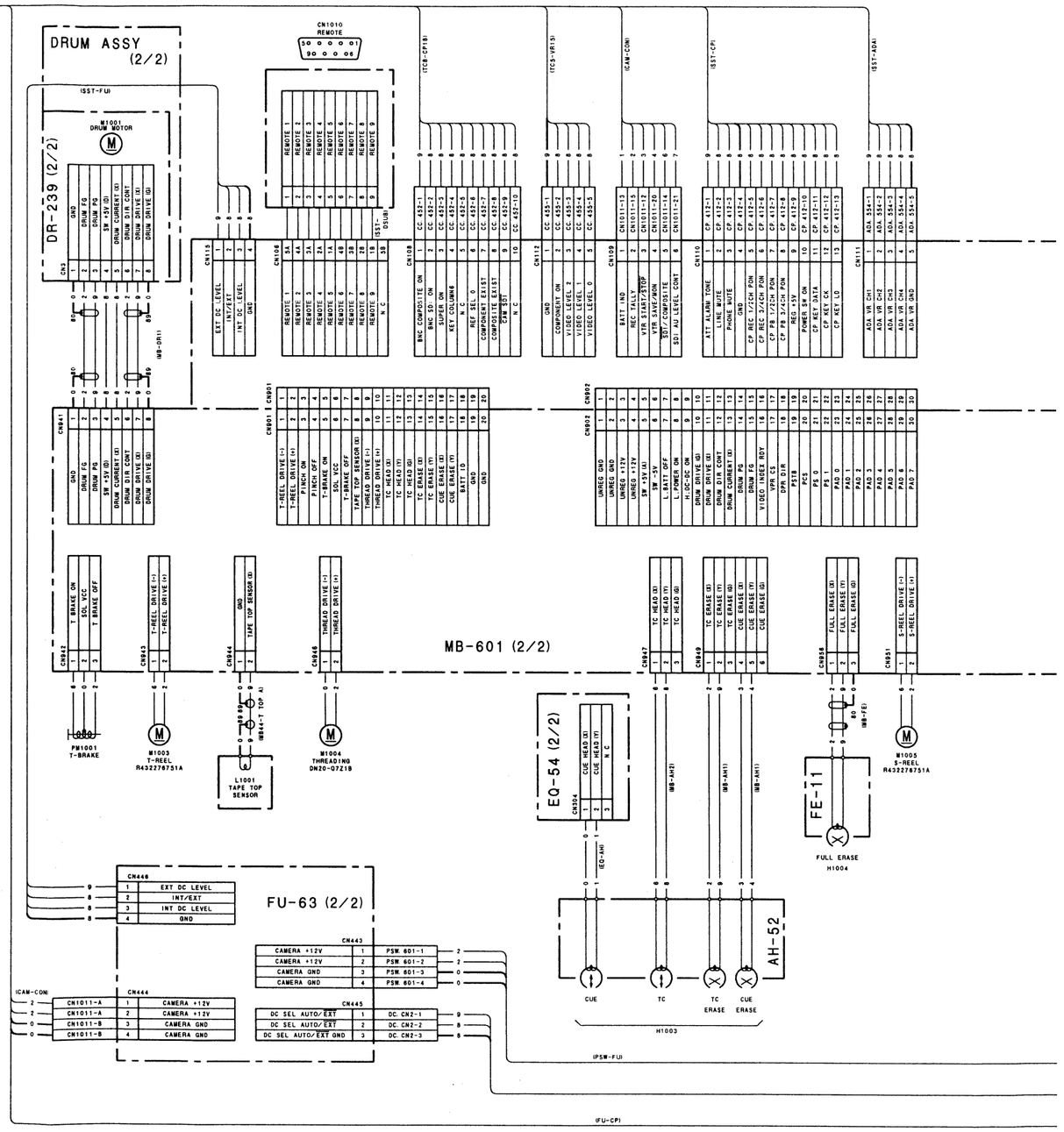

3-4

FRAME WIRING (2/2)

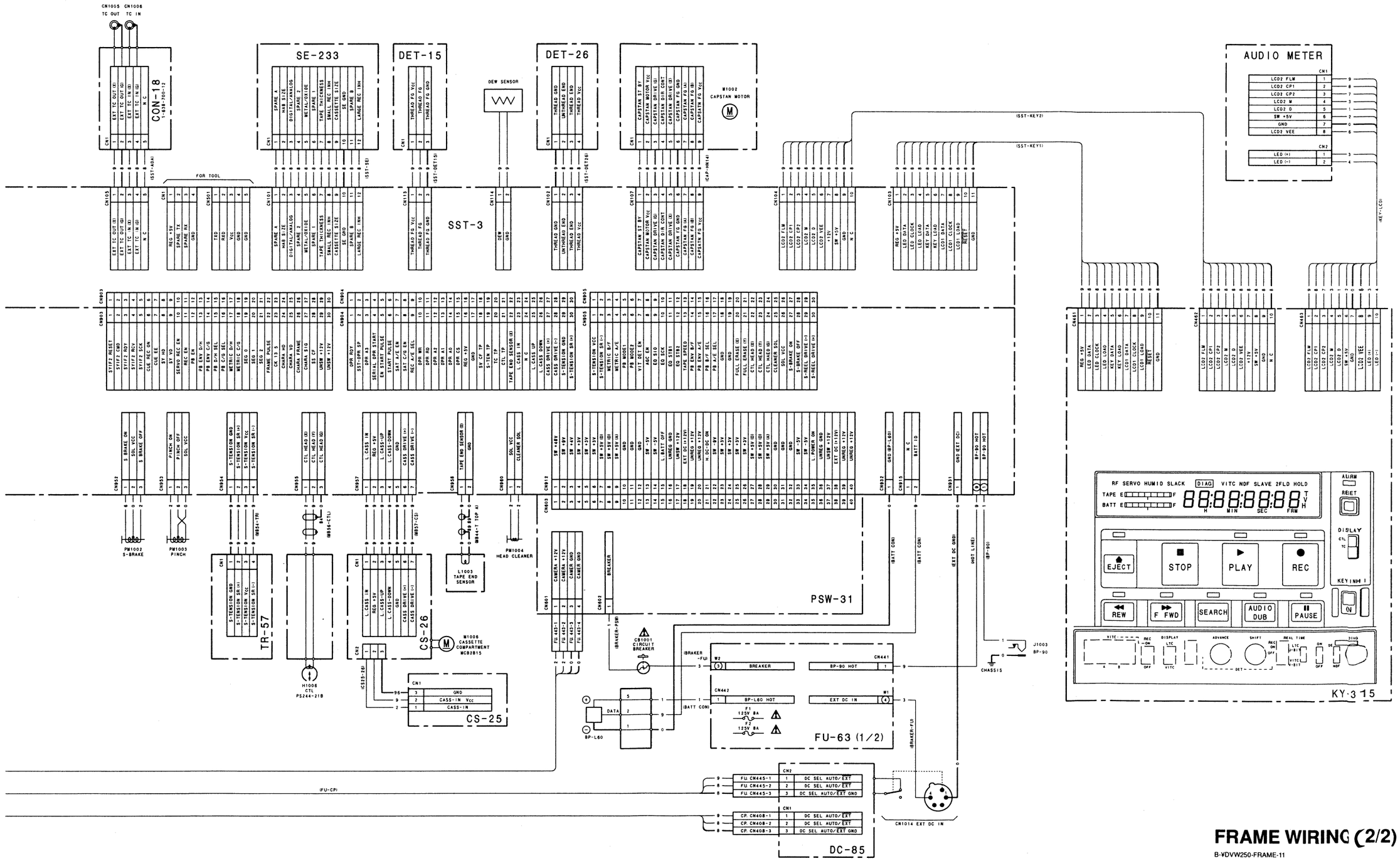

DVW-250 (J)
DVW-250 (UC)
DVW-250P (SY)

CC-66 (1-657-811-11)

1	CN451	A1
	CN452	E2
	CN453	C1
	CN454	A2
	CN455	E1
	CN456	B2
	CN457	A2
	CN458	D1
	D4	E2
	D5	A2
	D6	D1
	D7	D1
	D8	D1
	D9	C2
	FB2	A1
2	IC2	E1
	IC3	E1
	IC4	E1
	IC5	D1
	IC6	D2
	IC10	A1
	Q1	*E2
	Q3	*C1
	Q4	*A1
	Q6	E1
	Q7	D1
	Q8	D1
	Q9	D2
	Q10	D1
	S1	*E1
3	S2	*A2

* : Soldering Side

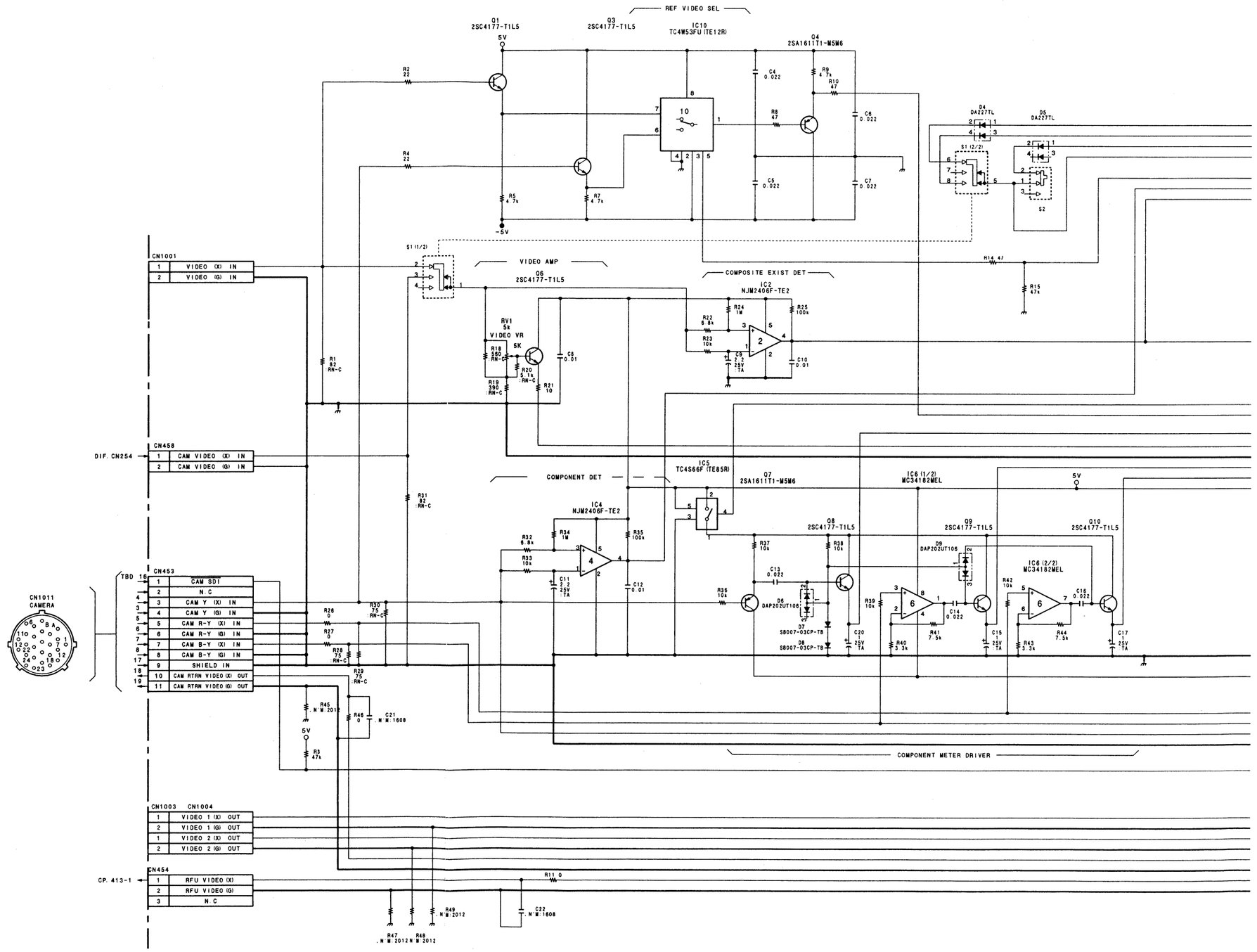

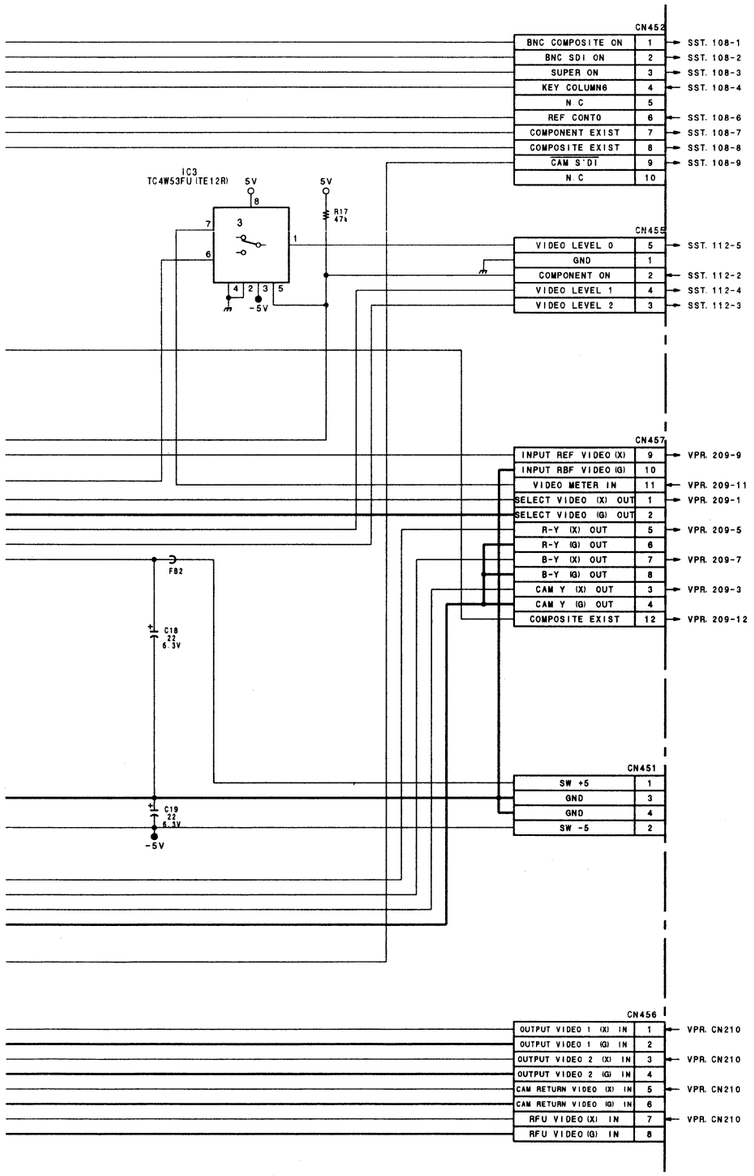

VIDEO INPUT/OUTPUT

CC-66

BOARD NO. 1-657-811-11
LOT NO. 409-
B-¥DVW250-CC66-11

DVW-250 (J)
DVW-250 (UC)
DVW-250P (SY)

VPR-12A (1-657-805-11)

CN201	*B6	IC29	C5	L200	F2	RV500	K3
CN202	*D6	IC30	*D5	L201	E1		
CN203	*F6	IC31	C5	L500	J4	TP1	H3
CN204	*H6	IC32	D5	L501	J4	TP2	H3
CN209	K2	IC33	D5	L502	K4	TP3	H4
CN210	K3	IC34	E5	L503	J3	TP4	F2
		IC36	E3	L504	J3	TP5	F4
CP200	A2	IC37	E5	L700	H6	TP6	F3
		IC38	*F5	L701	D6	TP7	F5
D1	*F3	IC40	E3	L702	C6	TP200	J2
D2	*F4	IC41	D2	L703	F6	TP201	F2
D3	*F4	IC42	C2	L704	E6	TP202	H1
D4	*E5	IC43	C3			TP203	E2
D5	D4	IC44	E4	Q1	*H4	TP204	C3
D10	F1	IC45	E3	Q2	*G5	TP205	C3
D200	*B5	IC200	B5	Q3	*H4	TP206	C4
D201	*C5	IC201	A5	Q4	*H4	TP207	A1
D202	*B5	IC202	B5	Q5	*G5	TP208	E2
D203	*G2	IC203	B5	Q6	G6	TP500	J4
D204	*A1	IC204	B5	Q7	*H2	TP501	J3
D206	*A2	IC205	B5	Q8	*H3	TP502	K3
D207	*D2	IC206	J1	Q9	*H4		
D500	*H5	IC207	G2	Q10	*F2	* : Soldering Side	
D700	J2	IC208	G1	Q11	*F3		
D701	G5	IC209	C1	Q12	*F4		
D702	H2	IC210	F2	Q13	G6		
D703	*K1	IC211	E1	Q14	*F3		
D704	*K5	IC212	H1	Q15	*F3		
		IC213	D1	Q16	*F3		
E1	H3	IC214	G1	Q17	*F3		
E2	E4	IC215	J1	Q18	*F4		
E3	B5	IC216	H1	Q19	*F4		
E200	F2	IC217	D1	Q20	*G5		
E201	F1	IC218	G1	Q21	*F3		
E202	B2	IC219	F1	Q22	*F3		
E203	C2	IC220	D1	Q23	*F4		
E204	A3	IC221	F2	Q24	D5		
E205	C4	IC222	C2	Q25	*E3		
E500	H5	IC223	E2	Q26	*E3		
E501	J3	IC224	C1	Q27	*E4		
		IC225	B2	Q28	*E4		
FB1	J2	IC226	B1	Q29	*E2		
FB2	J2	IC227	E2	Q30	*E3		
FB3	J2	IC228	H5	Q200	*J2		
FB200	J2	IC229	E2	Q201	*J2		
FB201	A2	IC230	B2	Q202	*J2		
FB202	A1	IC231	A2	Q203	*H2		
		IC232	D2	Q204	*F2		
FL1	G3	IC233	B1	Q205	*G2		
FL2	G4	IC234	C2	Q206	*G2		
FL3	G3	IC235	A1	Q207	*E2		
FL200	H2	IC236	A1	Q208	*G2		
FL500	K4	IC237	*B2	Q209	*F2		
		IC238	B2	Q210	*E1		
IC1	G6	IC239	A4	Q211	*D1		
IC2	*G6	IC240	B4	Q212	*D1		
IC3	G5	IC241	A3	Q213	*B1		
IC4	F6	IC242	A4	Q214	*B1		
IC5	F3	IC243	B4	Q215	A4		
IC6	F4	IC244	A3	Q216	*E2		
IC7	F5	IC245	A5	Q217	*E2		
IC8	F3	IC246	A5	Q500	*J5		
IC9	F3	IC247	A5	Q501	*J5		
IC10	F4	IC248	*G1	Q502	J3		
IC11	F5	IC249	*D2	Q700	G5		
IC12	F5	IC500	H6	Q701	G5		
IC13	*F5	IC501	J6	Q702	*D4		
IC14	E4	IC502	H6	Q703	*D3		
IC15	E3	IC503	H5	Q704	*H2		
IC16	E5	IC504	H5	Q705	J1		
IC17	F6	IC505	K5	Q706	J1		
IC18	E3	IC506	J5	Q707	D3		
IC19	E4	IC507	J4	Q708	D3		
IC21	F5	IC508	J4	Q709	*H2		
IC22	C3	IC509	J4	Q710	*J5		
IC23	C4	IC510	J3	Q711	*K5		
IC24	C4	IC511	J3	Q712	J5		
IC25	F5	IC700	D6				
IC26	C3	IC701	E5	RV200	K1		
IC27	C4			RV201	C1		
IC28	C4	L2	G6	RV202	F1		

VPR-12 (1/6)

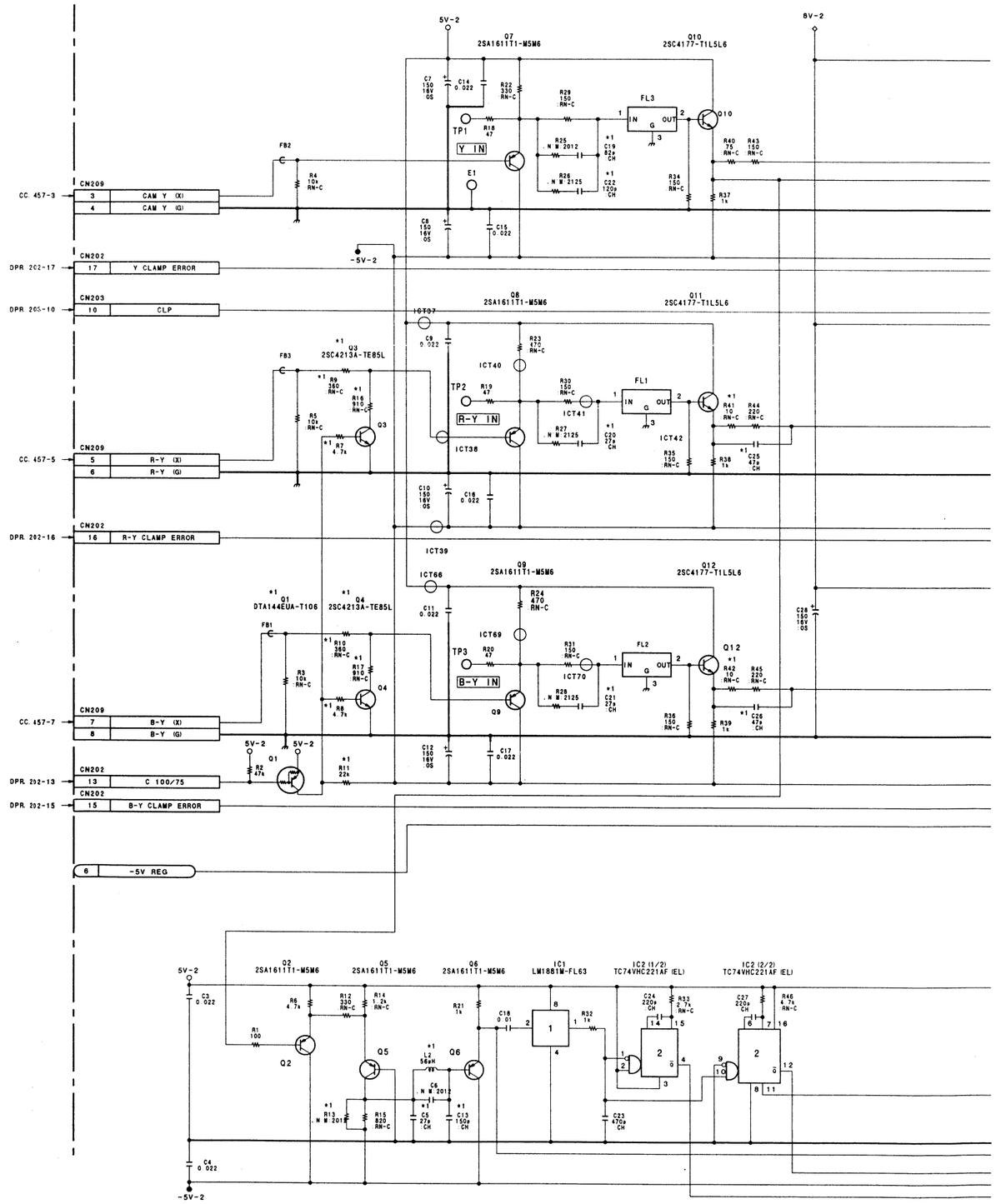

3-8

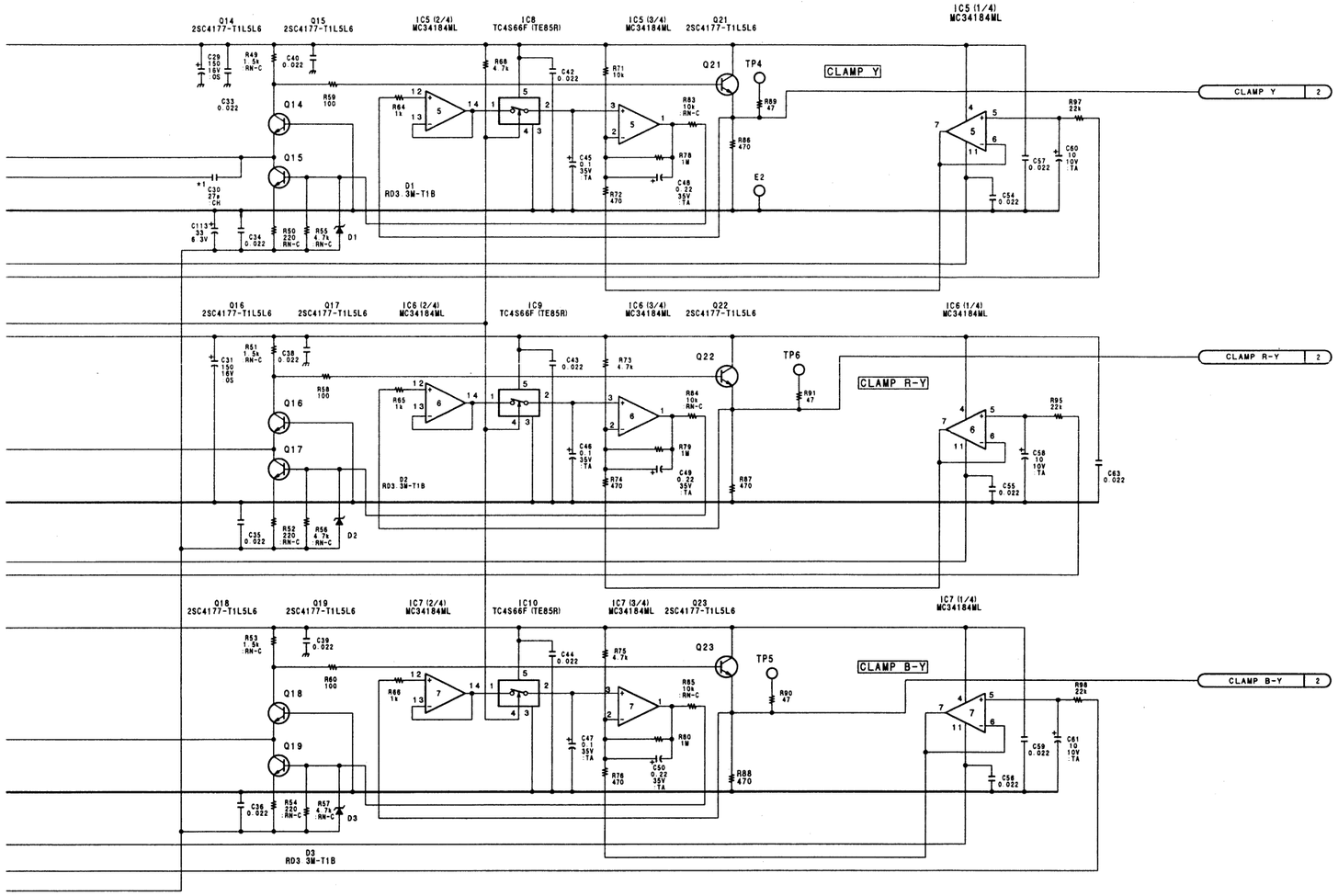

REF	NTSC	PAL
C19	82P	47P
C20	27P	22P
C21	27P	22P
C22	120P	100P
C5	27P	47P
C13	150P	220P
C25	47P	33P
C26	47P	33P
C30	27P	33P
C52	120P	150P
L2	56UH	82UH
Q3	2SC4213A	N'M
Q4	2SC4213A	N'M
Q1	DTA144EU	N'M
R13	N'M	15K
R9	360	0
R16	910	N'M
R7	4.7K	N'M
R10	360	0
R17	910	N'M
R8	4.7K	N'M
R11	22K	N'M
R41	10	0
R42	10	0

VIDEO SIGNAL PROCESSOR (AD/DA)

VPR-12 (1/6)

BOARD NO. 1-657-805-11

LOT NO. 409-

B-¥DVW250-VPR12-11-S/M

I J K L M N O P

DVW-250 (J)
DVW-250 (UC)
DVW-250P (SY)

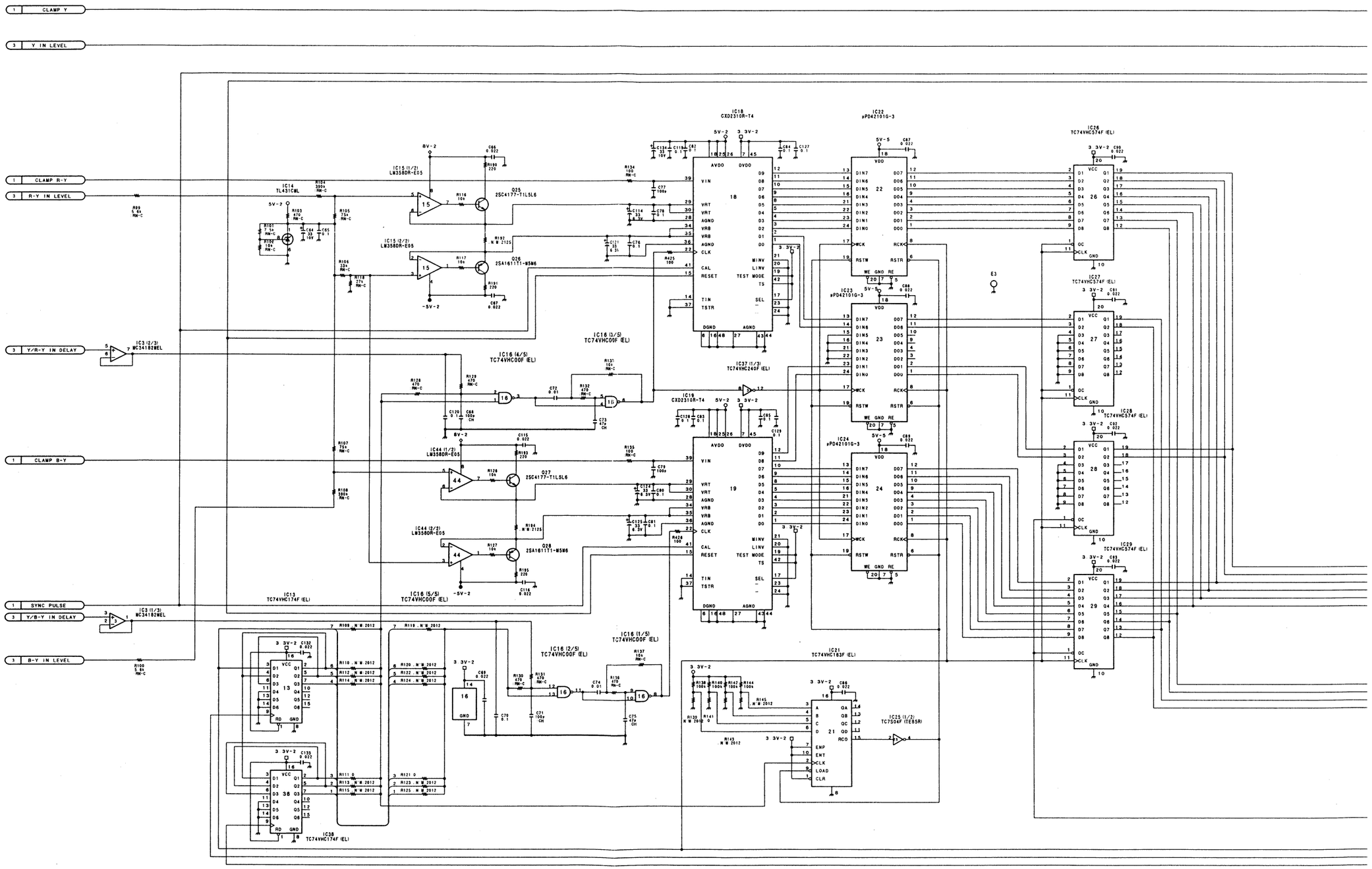

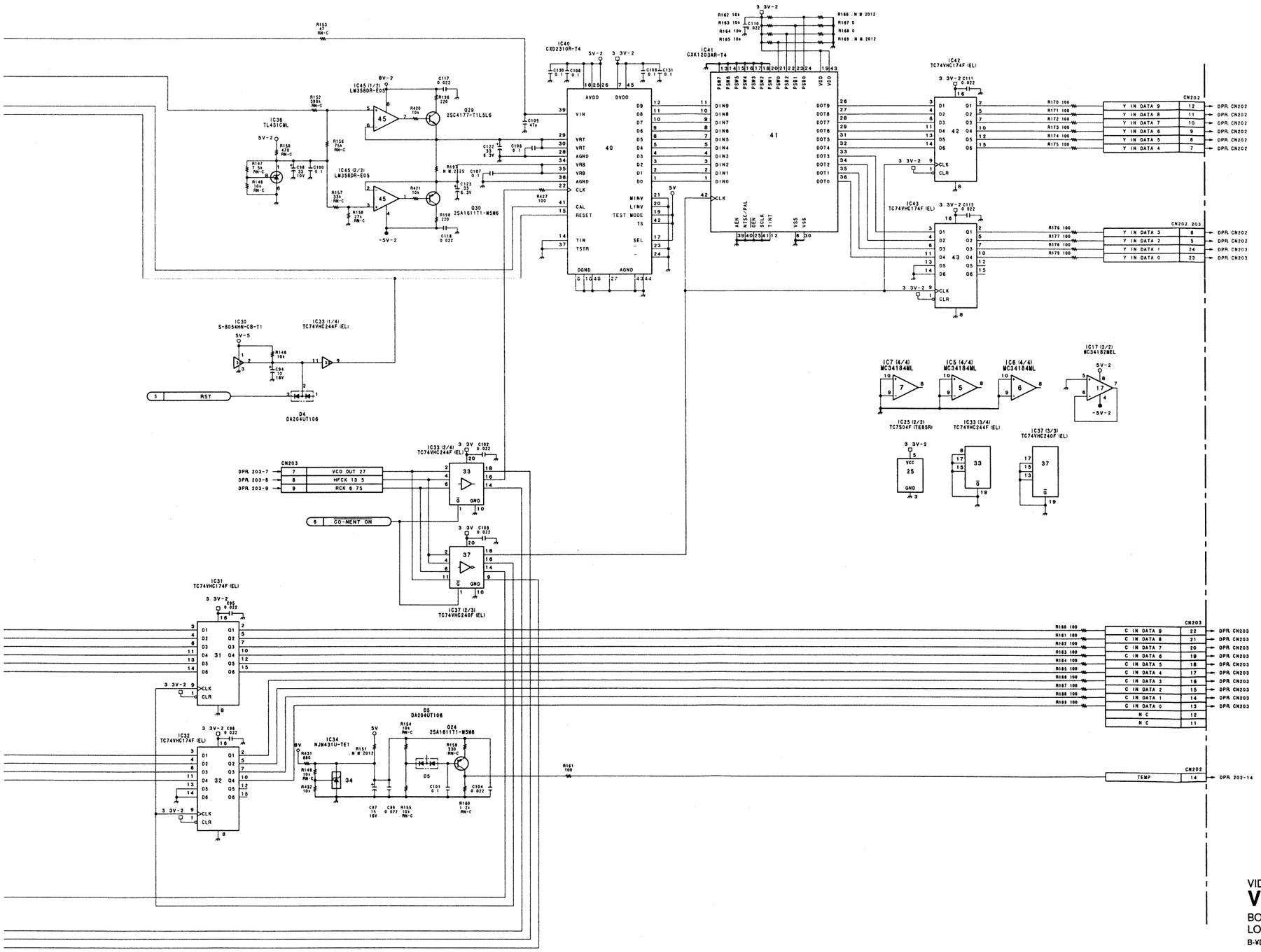

VIDEO SIGNAL PROCESSOR (AD/DA)

VPR-12 (2/6)

BOARD NO. 1-657-805-11
LOT NO. 409-
B-¥DVW250-VPR12-11-S/M

DVW-250 (J)
DVW-250 (UC)
DVW-250P (SY)

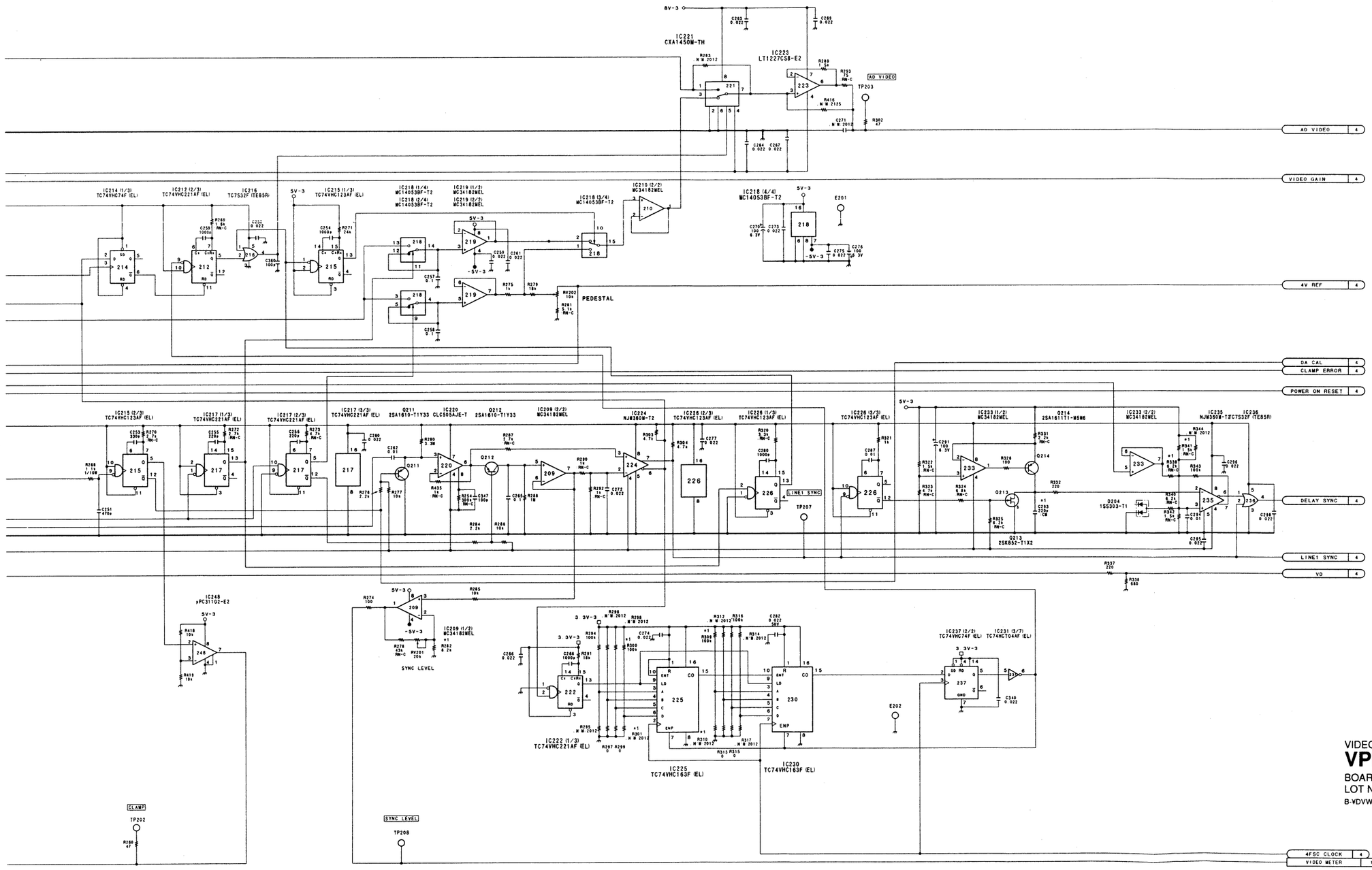

*1

REF	NTSC	PAL
C293	220P	150P
R300	100K	N.M
R301	N.M	0
R309	100K	N.M
R310	N.M	0
R339	6.2K	5.6K
R341	1.5K	1.8K
C215	27P	39P
R282	8.2K	10K

VIDEO SIGNAL PROCESSOR (AD/DA)

VPR-12 (3/6)

BOARD NO. 1-657-805-11

LOT NO. 409-

B-¥DVW250-VPR12-11-S/M

DVW-250 (J)
DVW-250 (UC)
DVW-250P (SY)

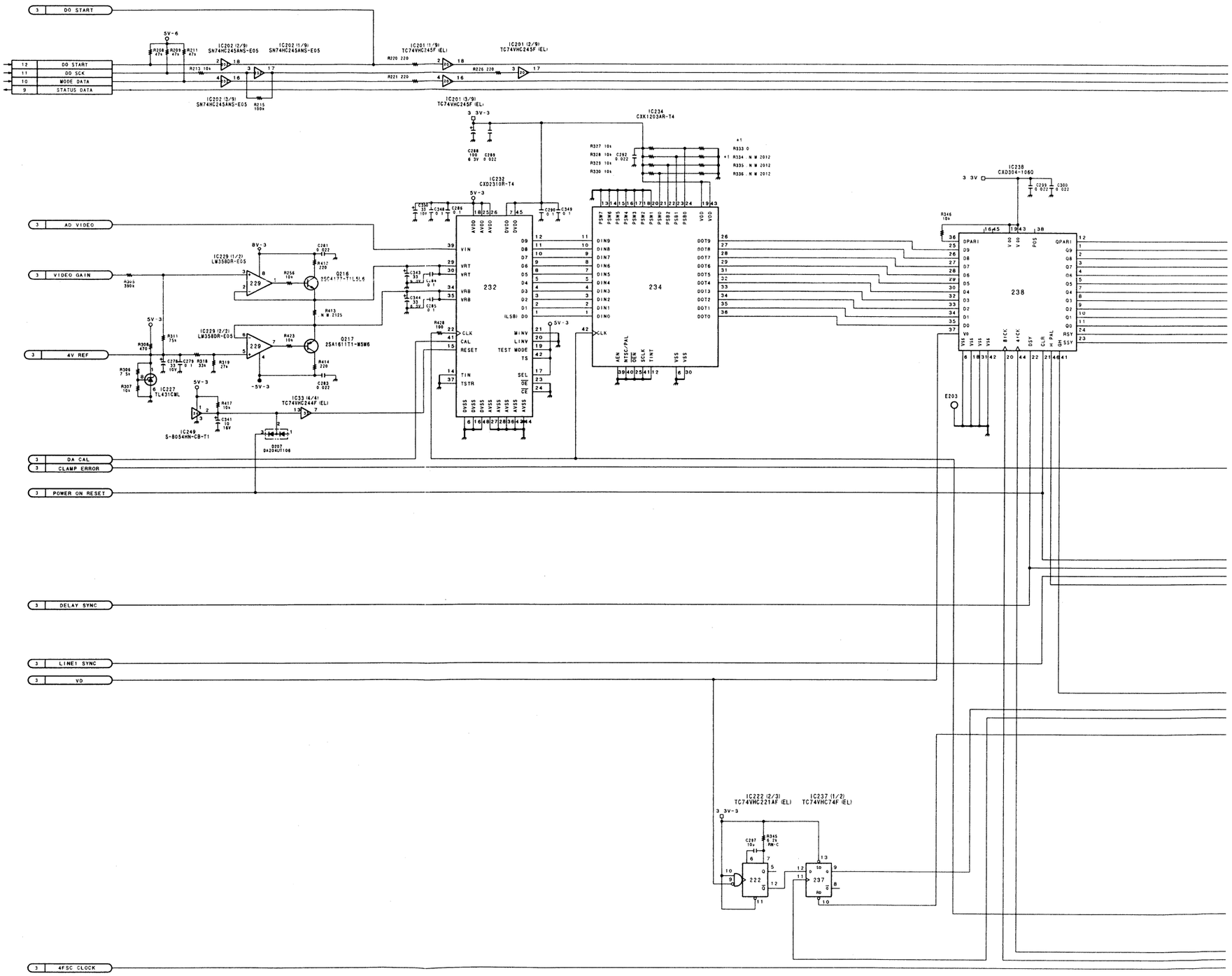

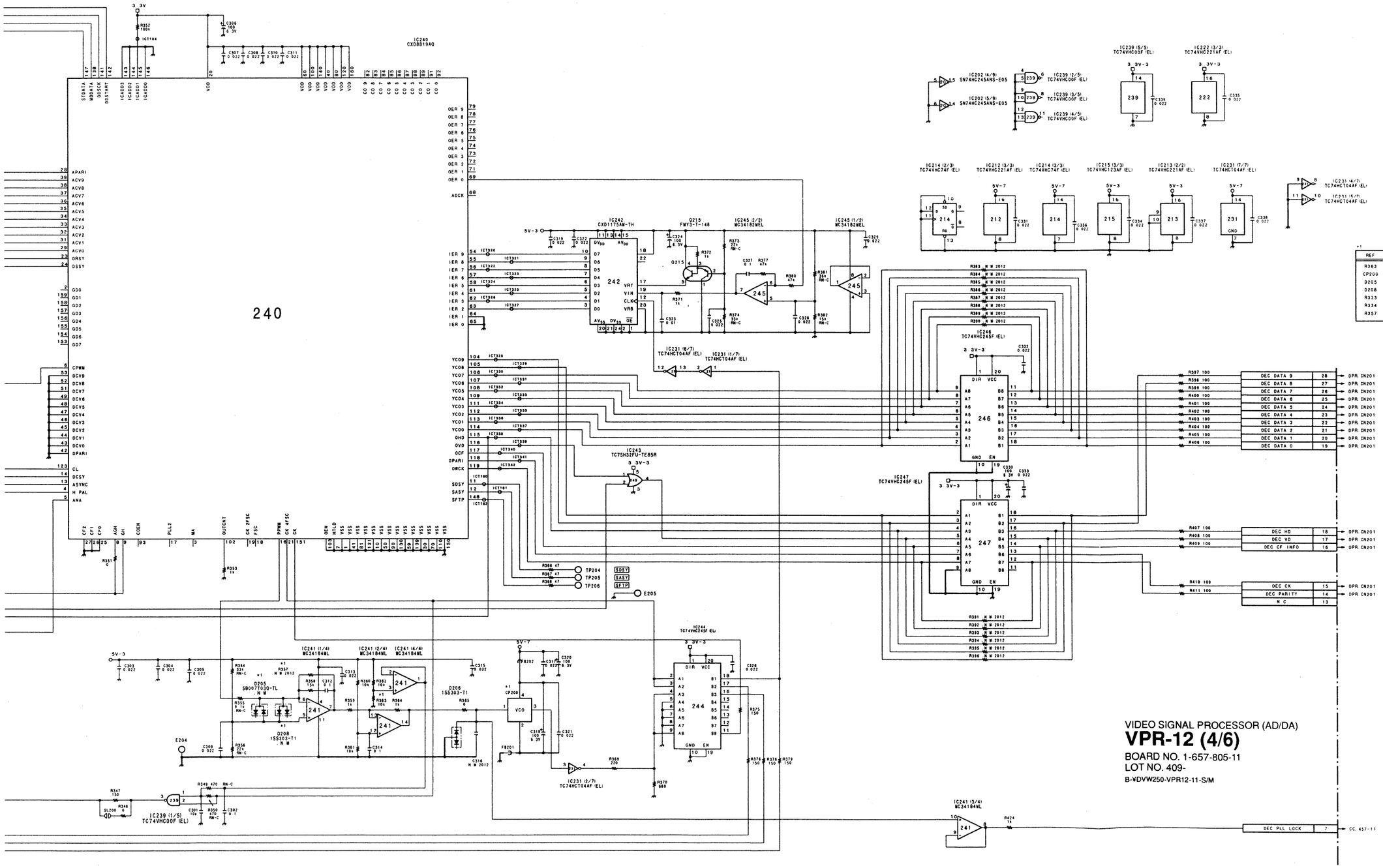

REF	NTSC	PAL
R363	10K	4.7K
CP200	X TAL OSC(296)	X TAL OSC(537)
D205	N.M	SB007T03Q-TL
D208	N.M	1SS303-T1
R333	0	N.M
R334	N.M	0
R357	N.M	2.2M

VIDEO SIGNAL PROCESSOR (AD/DA)

VPR-12 (4/6)

BOARD NO. 1-657-805-11
LOT NO. 409-
B-¥DVW250-VPR12-11-S/M

DVW-250 (J)
DVW-250 (UC)
DVW-250P (SY)

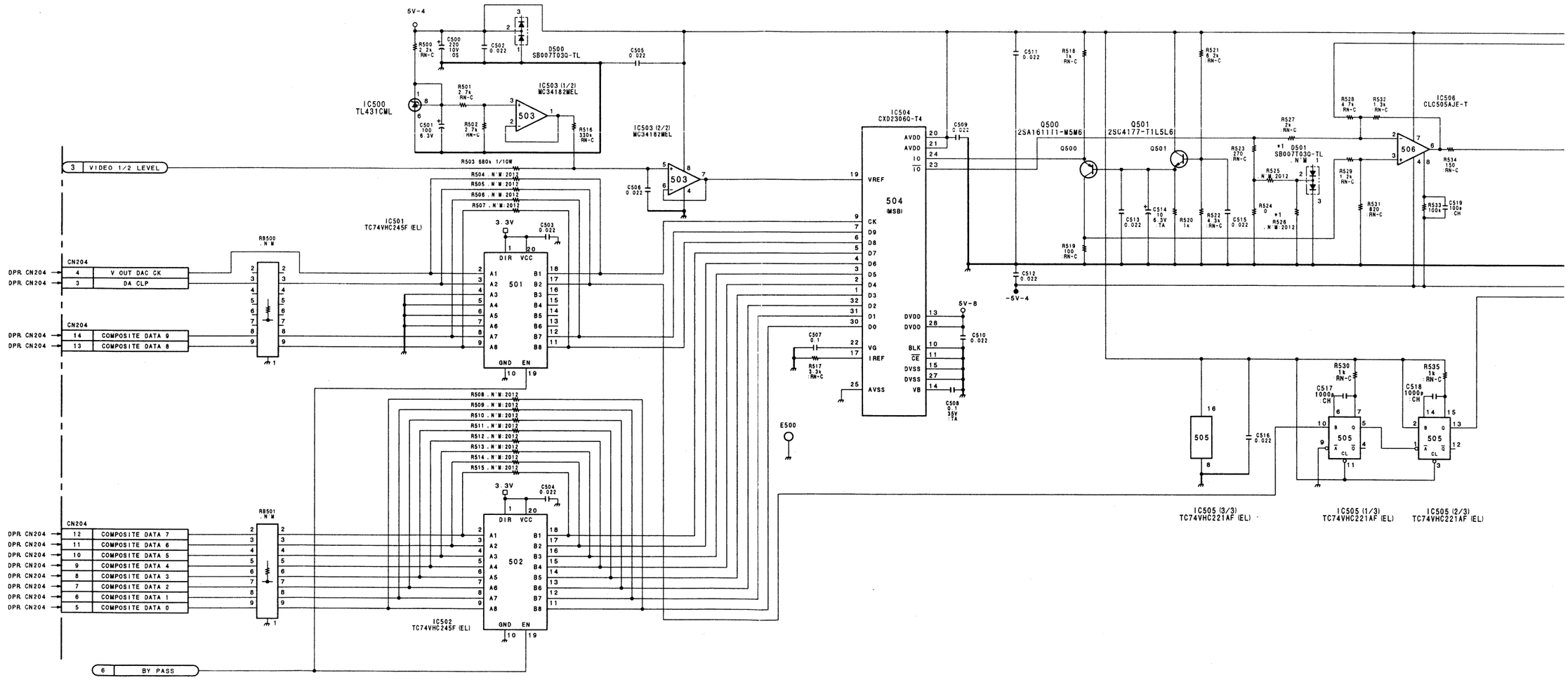

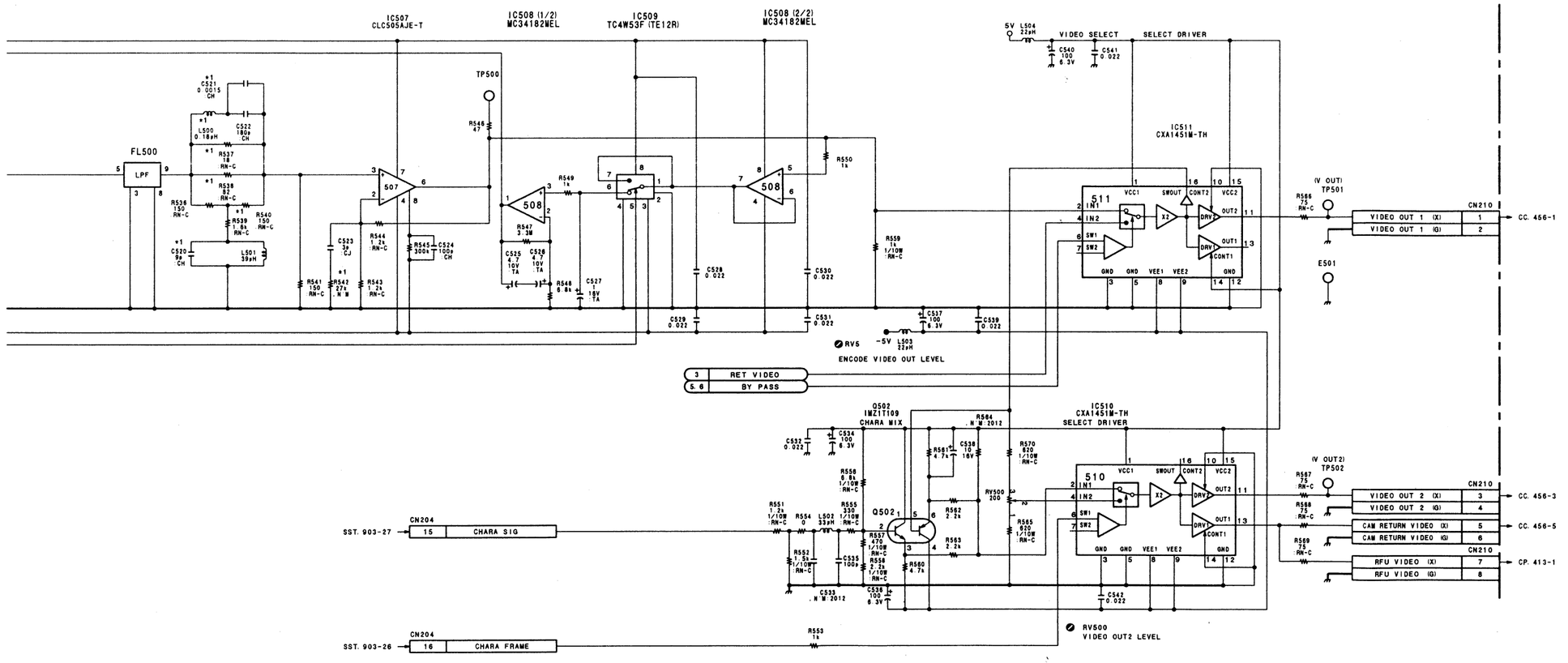

*1

REF	NTSC	PAL
C520	9P	6P
C521	1500P	2200P
D501	N.M	SB007
L500	0.18UH	0.12UH
R526	N.M	1.8K
R537	18	10
R538	82	27
R539	1.6K	2.7K
R542	N.M	39K

VIDEO SIGNAL PROCESSOR (AD/DA)
VPR-12 (5/6)
BOARD NO. 1-657-805-11
LOT NO. 409-
B-¥DVW250-VPR12-11-S/M

DVW-250 (J)
DVW-250 (UC)
DVW-250P (SY)

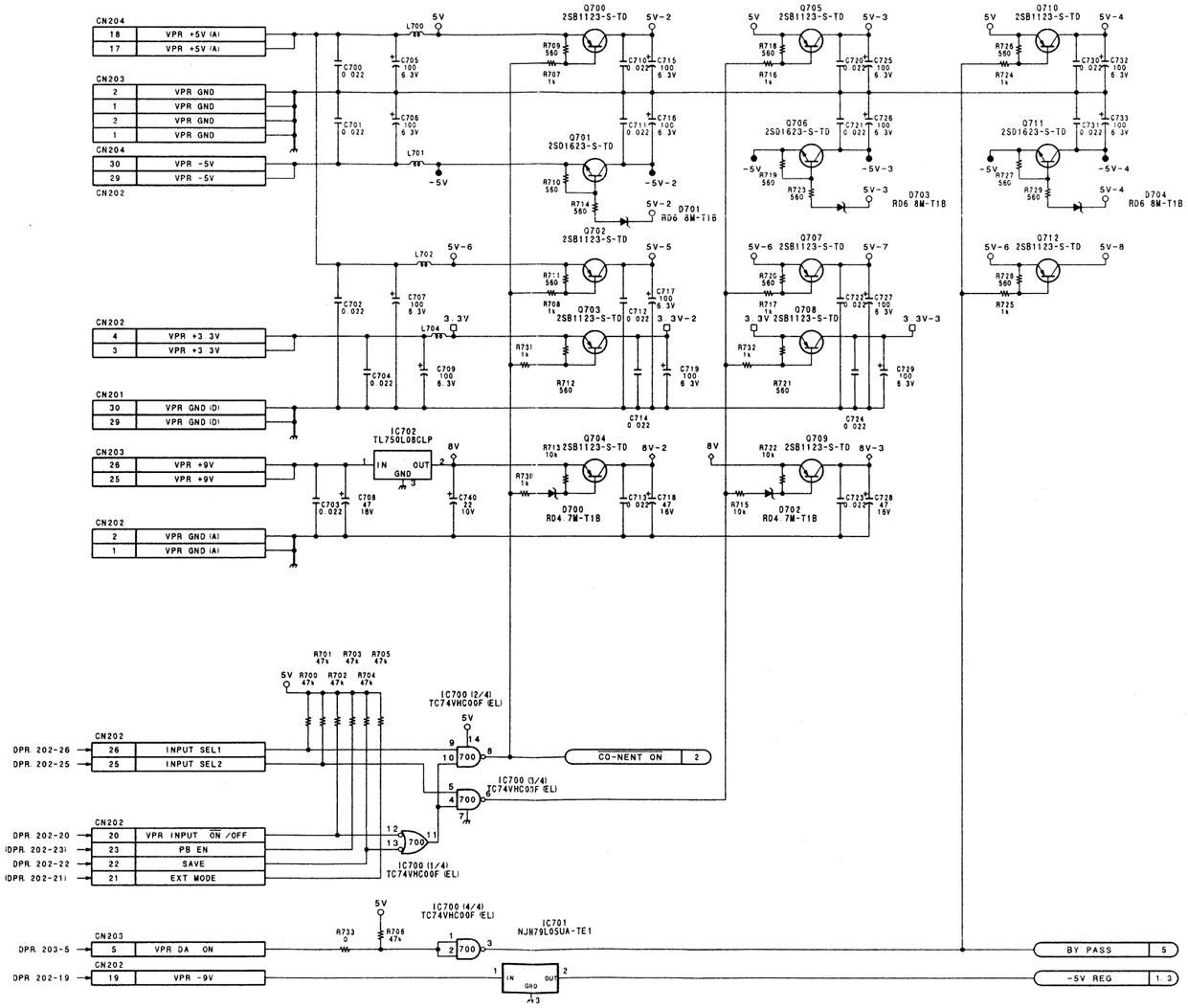

VIDEO SIGNAL PROCESSOR (AD/DA)

VPR-12 (6/6)

BOARD NO. 1-657-805-11
LOT NO. 409-
B-VDVW250-VPR12-11-S/M

DVW-250 (J)
DVW-250 (UC)
DVW-250P (SY)

DIF-31 (1-657-802-11)

CN205	D3	Q323	C3	
CN251	A3	Q324	B3	
CN252	A4	Q325	B3	
CN253	A4	Q326	C3	
CN254	A3	Q327	B3	
		Q328	C3	
D200	D2	Q500	D2	
		Q501	D3	
E300	*D1			
E301	*A2	RB100	*E1	
E302	A5	RB102	D2	
E303	D5	RB103	*E1	
		RB105	D2	
FB300	*A3	RB106	*D1	
FB301	*A3	RB107	*D1	
FB302	*A5	RB108	D2	
FB303	B3	RB111	*A2	
FB304	B3	RB112	*B2	
FB305	*D3	RB300	B3	
FB310	*A5	RB301	*D3	
		RB310	B4	
IC100	D2	RB311	B4	
IC101	*D1	RB312	B3	
IC102	*D1	RB500	D4	
IC104	D2	RB501	D3	
IC105	*D1	RB502	D4	
IC106	*D2			
IC107	*C1	RV100	*B3	
IC108	B1	RV300	*A3	
IC110	*B2			
IC300	A3	S300	*C4	
IC301	*B4			
IC302	C2	TP101	*B3	
IC303	C2	TP301	*A4	
IC304	C4	TP303	*C3	
IC305	*B4			
IC306	C3	* : Soldering Side		
IC308	B5			
IC309	D5			
IC310	D5			
IC311	D4			
IC312	*D4			
IC313	C2			
IC500	D4			
IC501	D3			
IC502	C4			
IC503	D4			
IC504	D3			
IC505	C3			
IC506	C3			
IC508	C4			
IC511	C5			
L100	B3			
Q100	B3			
Q101	A3			
Q102	A2			
Q103	A2			
Q104	*B3			
Q300	A4			
Q301	A3			
Q302	A3			
Q303	*A3			
Q306	B3			
Q307	C4			
Q308	B4			
Q309	C4			
Q310	B4			
Q311	C4			
Q312	B4			
Q313	C4			
Q314	B4			
Q315	C4			
Q316	B4			
Q317	C4			
Q318	B4			
Q319	B3			
Q320	B3			
Q321	C3			
Q322	B3			

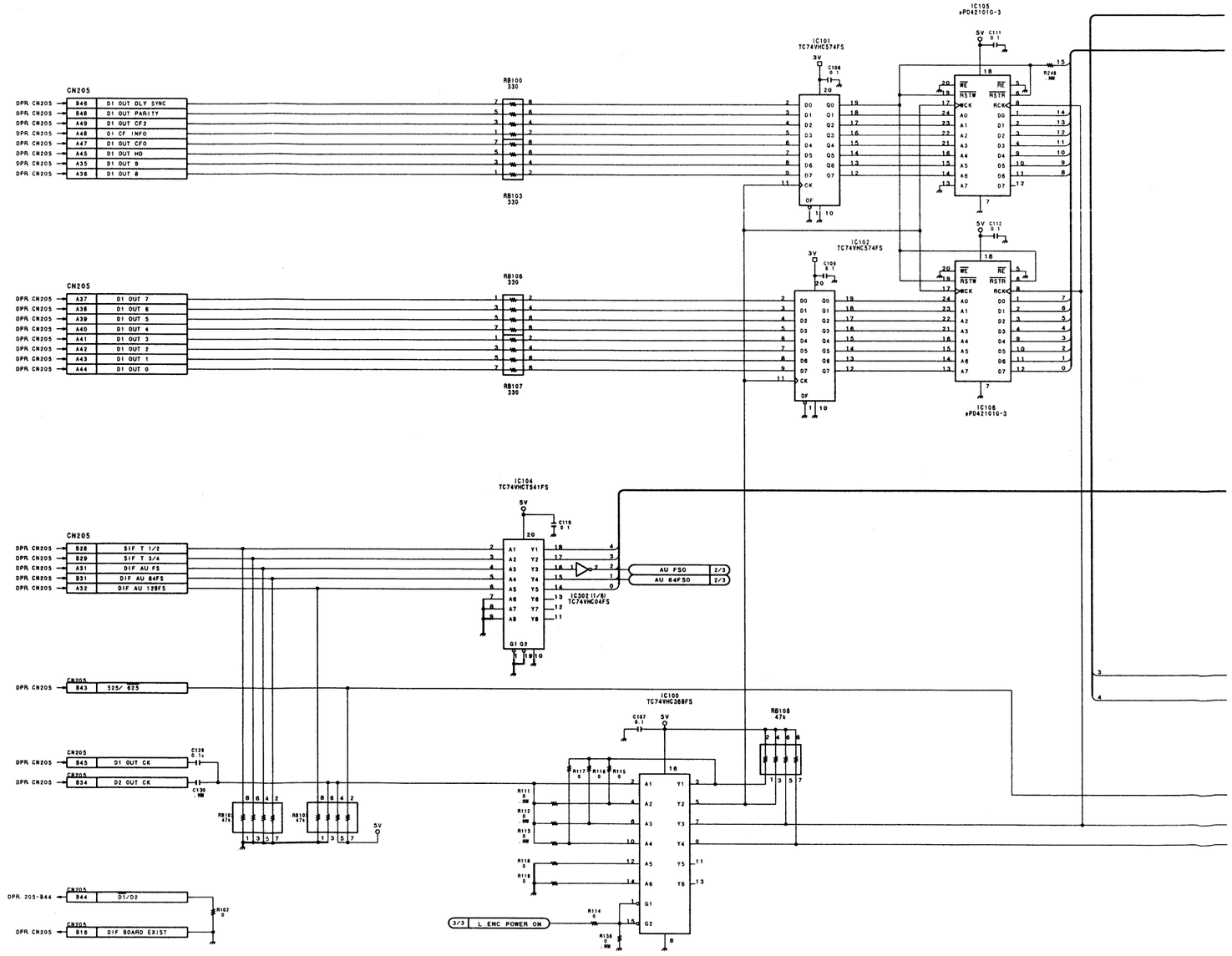

A | B | C | D | E | F | G | H

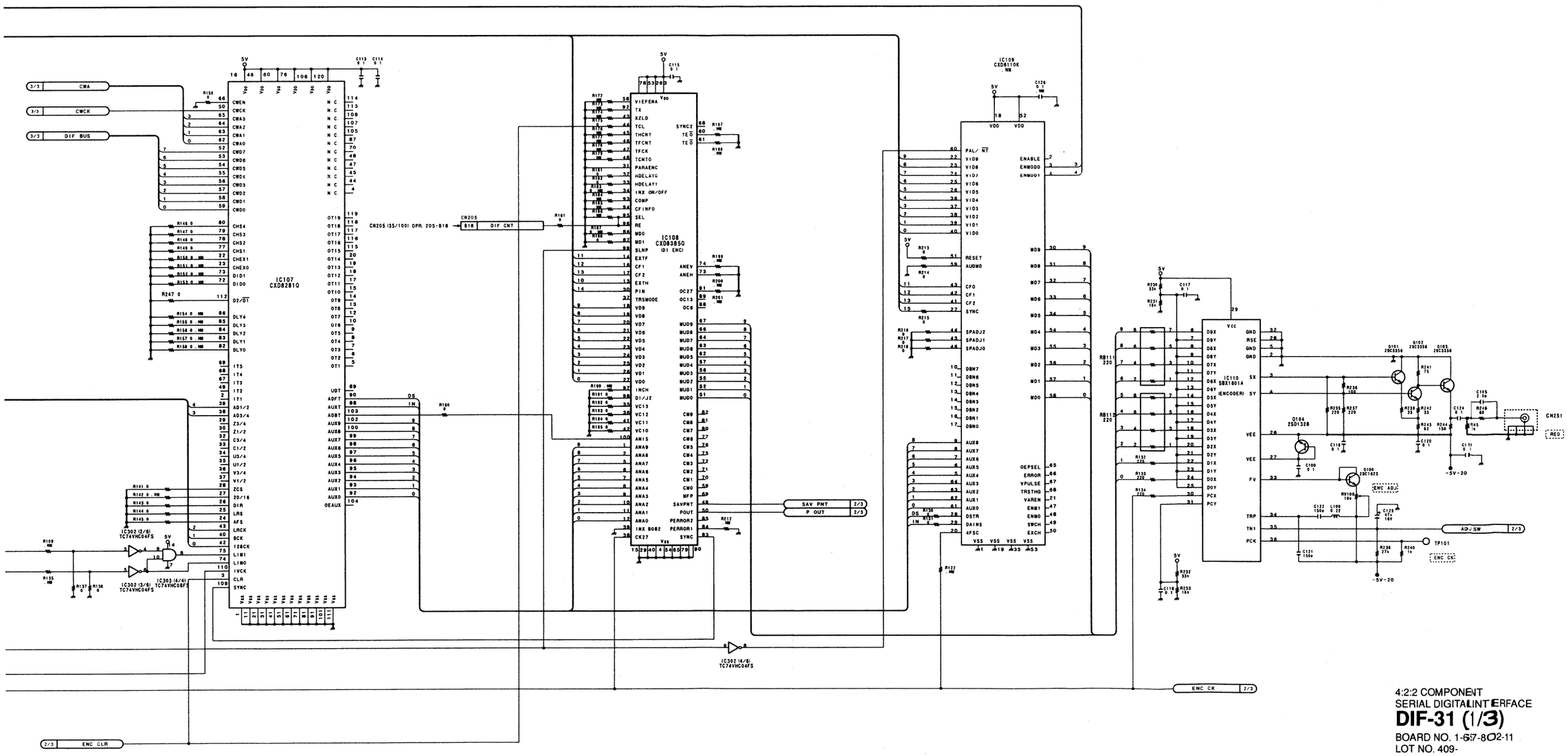

4:2:2 COMPONENT
SERIAL DIGITAL INTERFACE
DIF-31 (1/3)
BOARD NO. 1-67-802-11
LOT NO. 409-
B-VDVW250-DIF31-11

DVW-250 (J)
DVW-250 (UC)
DVW-250P (SY)

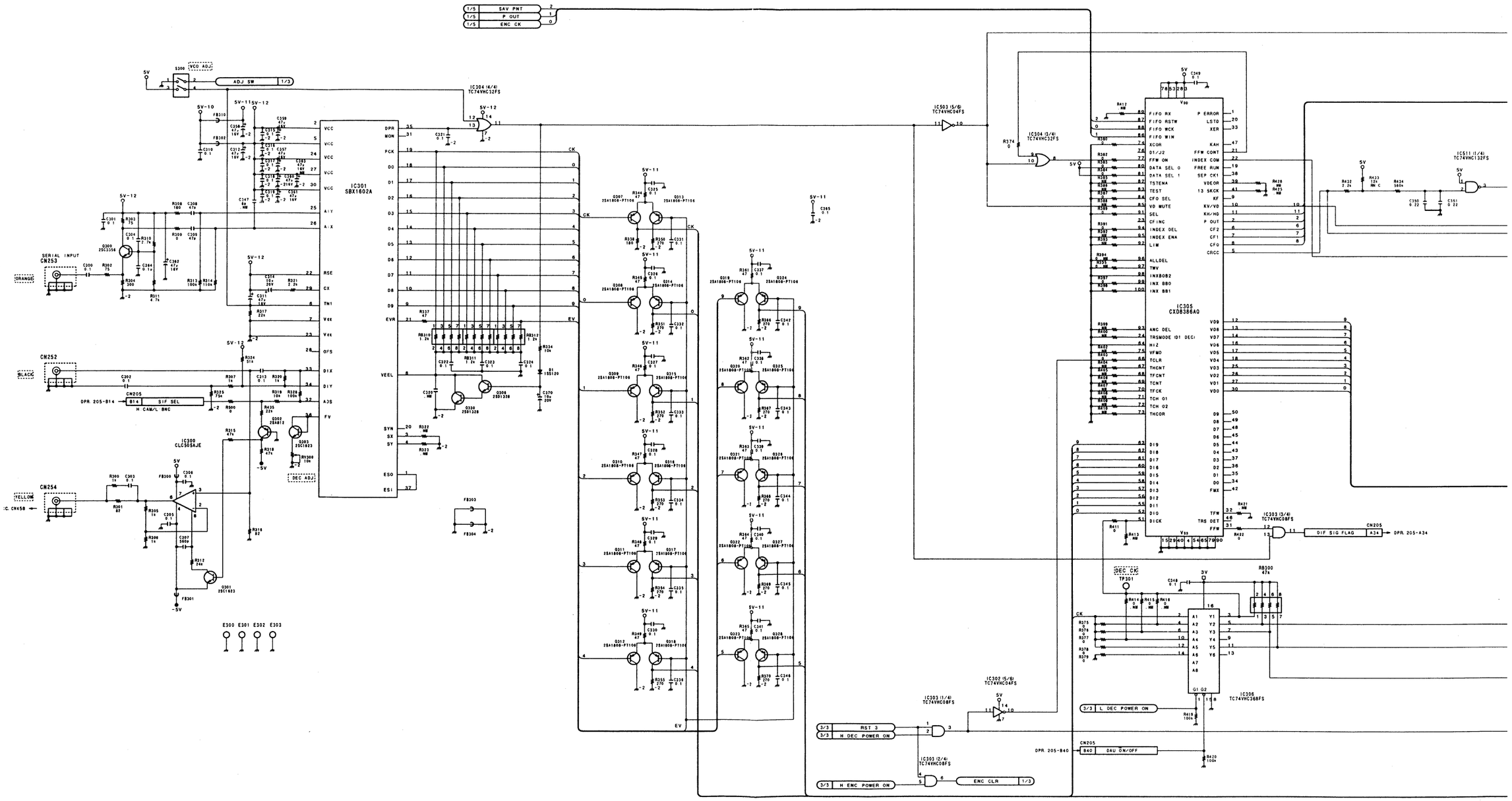

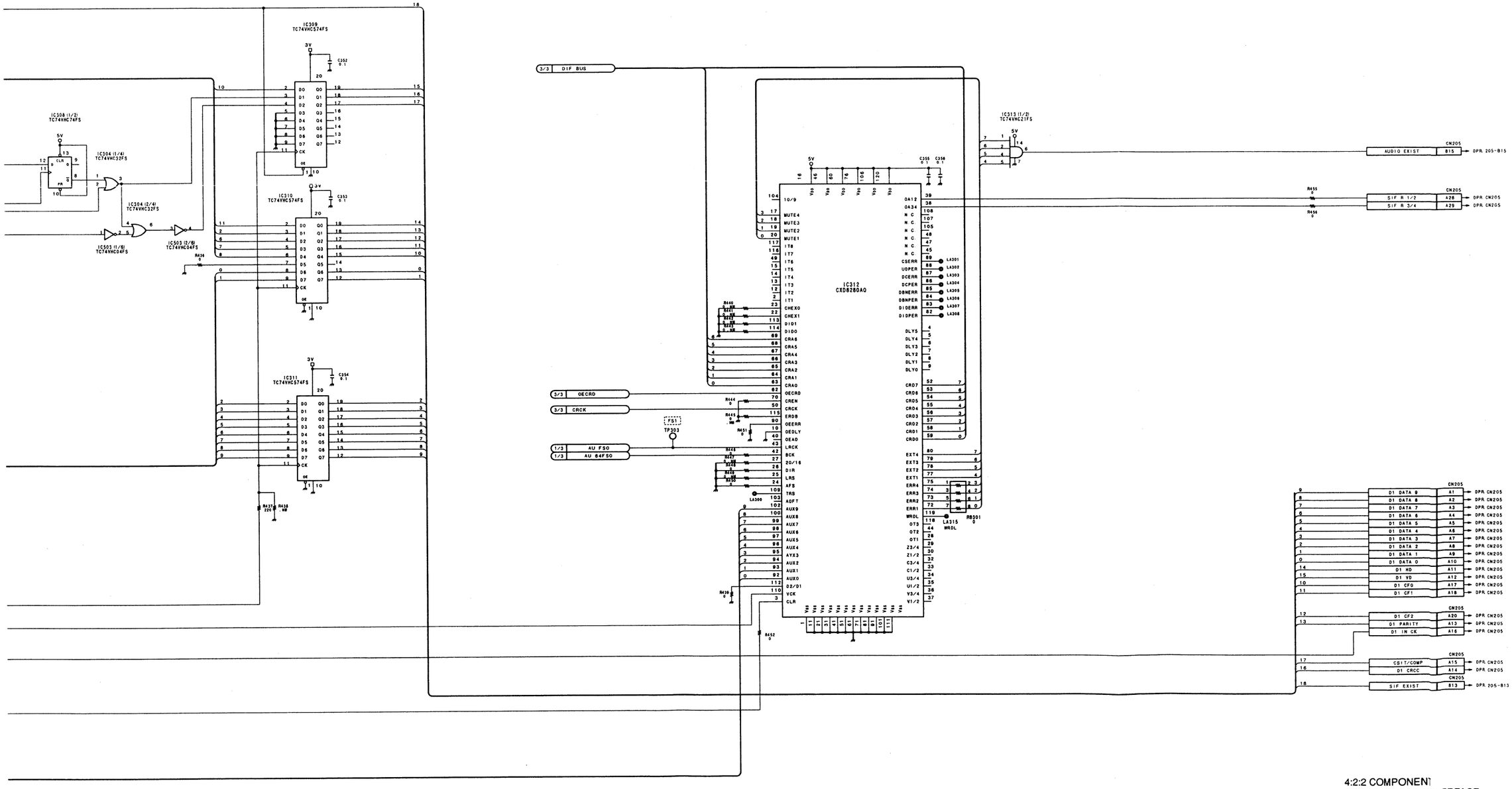

4:2:2 COMPONENT
SERIAL DIGITAL INTERFACE
DIF-31 (2/3)
BOARD NO. 1-657-30● 2-11
LOT NO. 409-
B-VDVW250-DIF31-11

DVW-250 (J)
DVW-250 (UC)
DVW-250P (SY)

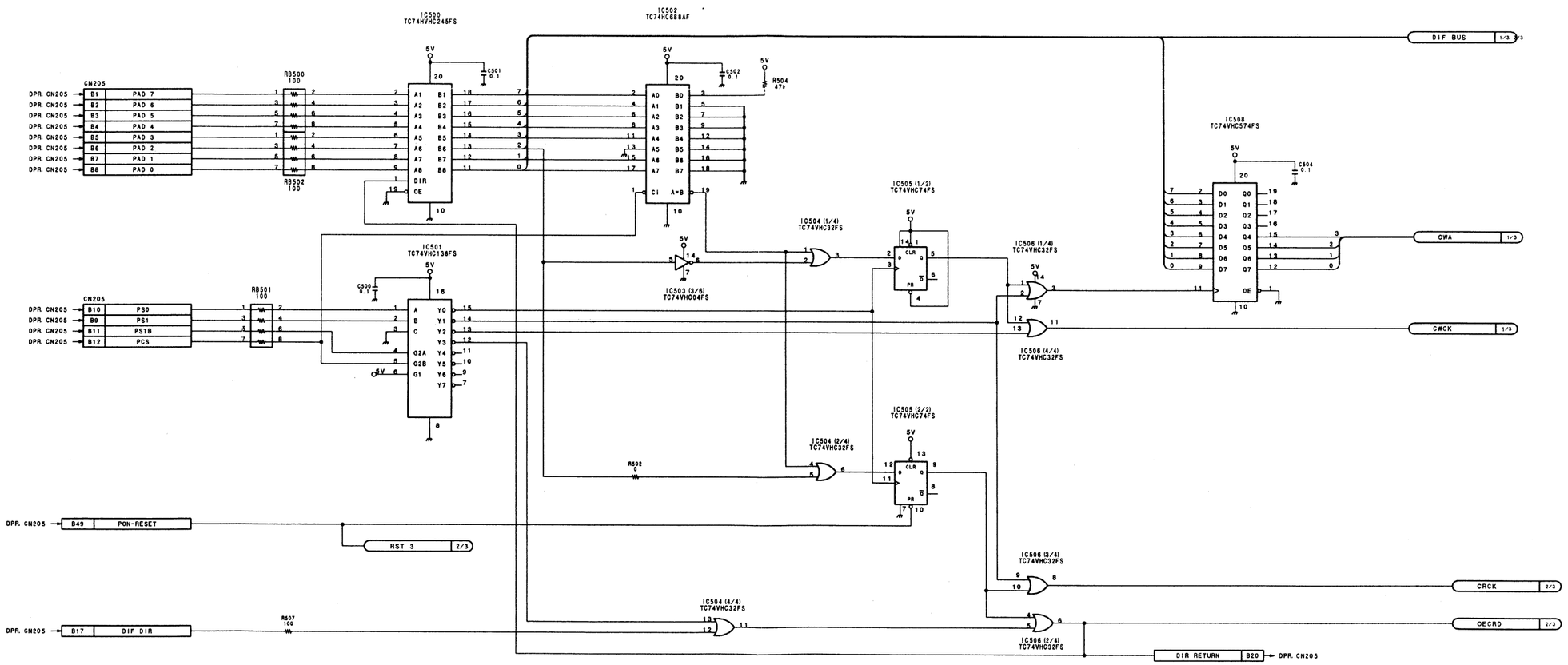

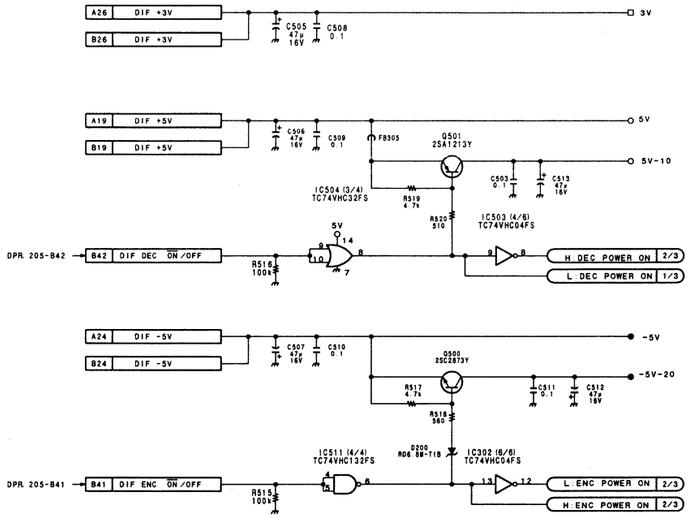

4:2:2 COMPONENT
SERIAL DIGITAL INTERFACE

DIF-31 (3/3)

BOARD NO. 1-657-802-11
LOT NO. 409-

8-¥DVW250-DIF31-11

DVW-250 (J)
DVW-250 (UC)
DVW-250P (SY)

CP-260 (1-657-812-11)

CN401	K2	L402	*J1
CN402	K2	L1001	*K2
CN403	G2		
CN404	H2	Q551	E2
CN405	H2	Q601	*B1
CN406	J2	Q602	*C1
CN407	B2	Q701	*B1
CN408	L2	Q702	*B1
CN409	A2	Q801	D1
CN410	B2	Q802	D2
CN411	B2	Q901	C2
CN412	L1	Q902	C1
CN413	L2	Q1001	*L1
CN414	G2	Q1002	*L1
CN415	H2	Q1003	K1
CN416	H2	Q1005	K1
CN417	J2	Q1006	*L2
CN421	B1	Q1007	*L2
CN1009	L2	Q1008	*F1
		Q1009	*E1
D101	*F1	Q1010	*G1
D102	*E1	Q1011	*G1
D201	*F1	Q1012	*E1
D202	*G1	Q1013	*E2
D301	*H1	Q1014	*E1
D302	*H1	Q1015	*E2
D401	*H1	Q1016	J1
D402	*H1	Q1017	*F2
D601	*G2	Q1018	*F2
D602	*G2	Q1019	G1
D801	*H2	Q1020	G1
D802	*J2	Q2001	*L2
D1004	*L2	Q2002	*L1
D1005	*F1	Q2003	*L2
D1006	*F1	Q2004	*L1
D1007	*F1	Q2005	*L2
D1008	*G1		
D1009	*G1	RV551	*J1
D1010	*G1		
D1011	*F2	S401	C2
D1012	*E1	S402	C2
D1013	*E2	S403	D2
D1014	*E1	S404	D2
D1015	*E1	S405	C2
D1016	*E1	S406	C2
		S407	D2
E551	J1	S408	D2
		S409	D2
IC101	*F1	S410	E2
IC201	*G1	S411	E2
IC202	J2	S412	F1
IC301	*H1	S413	G1
IC401	*J1	S414	H1
IC551	E2	S415	J1
IC552	D2	S416	F2
IC553	*C2	S417	G2
IC554	*C2	S418	H2
IC601	*A1	S419	J2
IC602	*A2	S420	F2
IC603	*A1	S421	G2
IC701	*B1	S422	H2
IC703	*B2	S423	J2
IC801	*E1	S424	L2
IC802	*B2		
IC803	*D1	TP551	J1
IC901	*D1		
IC903	*C1	* : Soldering Side	
IC1001	K1		
IC1004	K1		
IC1007	L1		
IC2001	*L2		
L101	*F1		
L102	*F1		
L201	*G1		
L202	*G1		
L203	K2		
L204	K2		
L301	*H1		
L302	*H1		
L401	*J1		

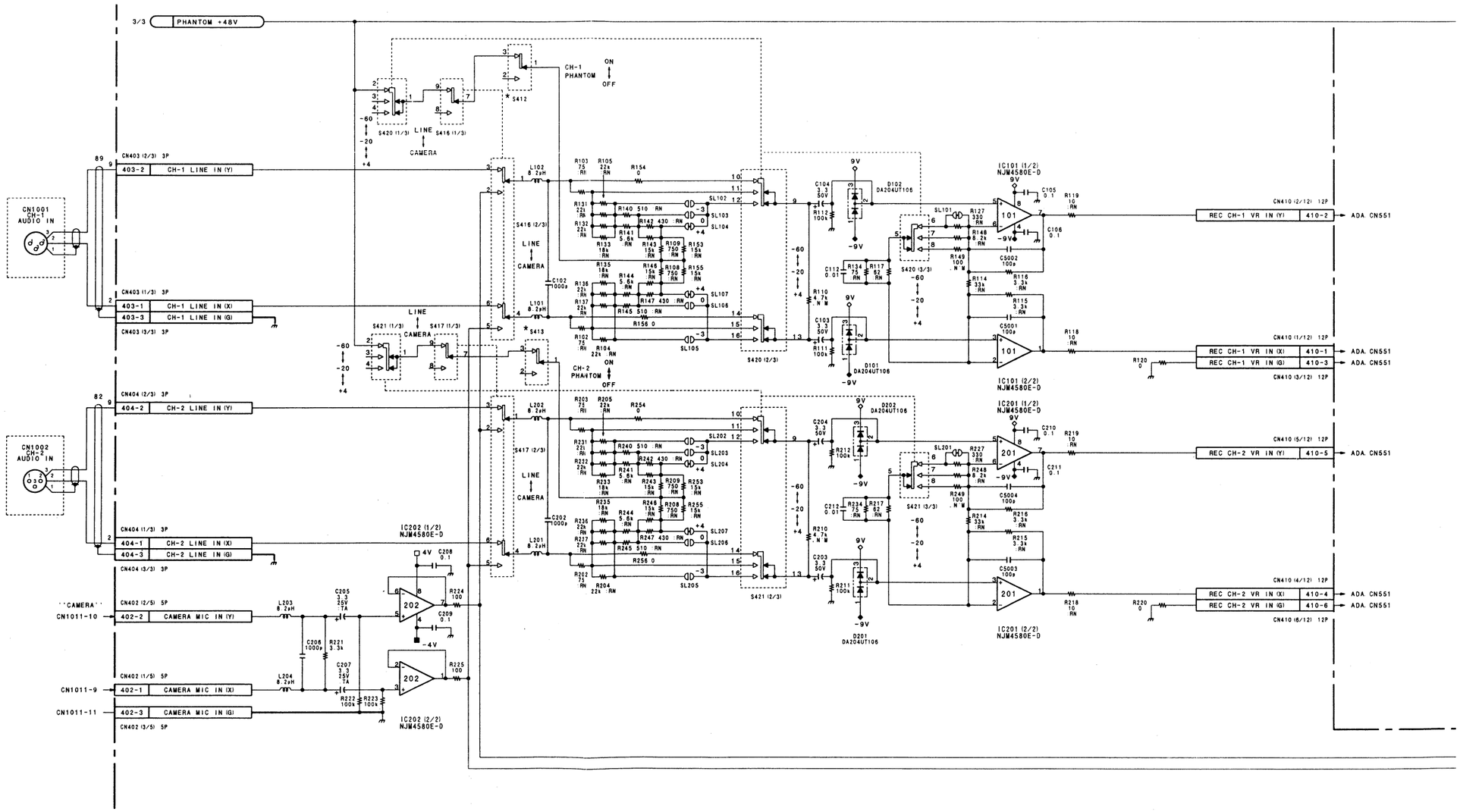

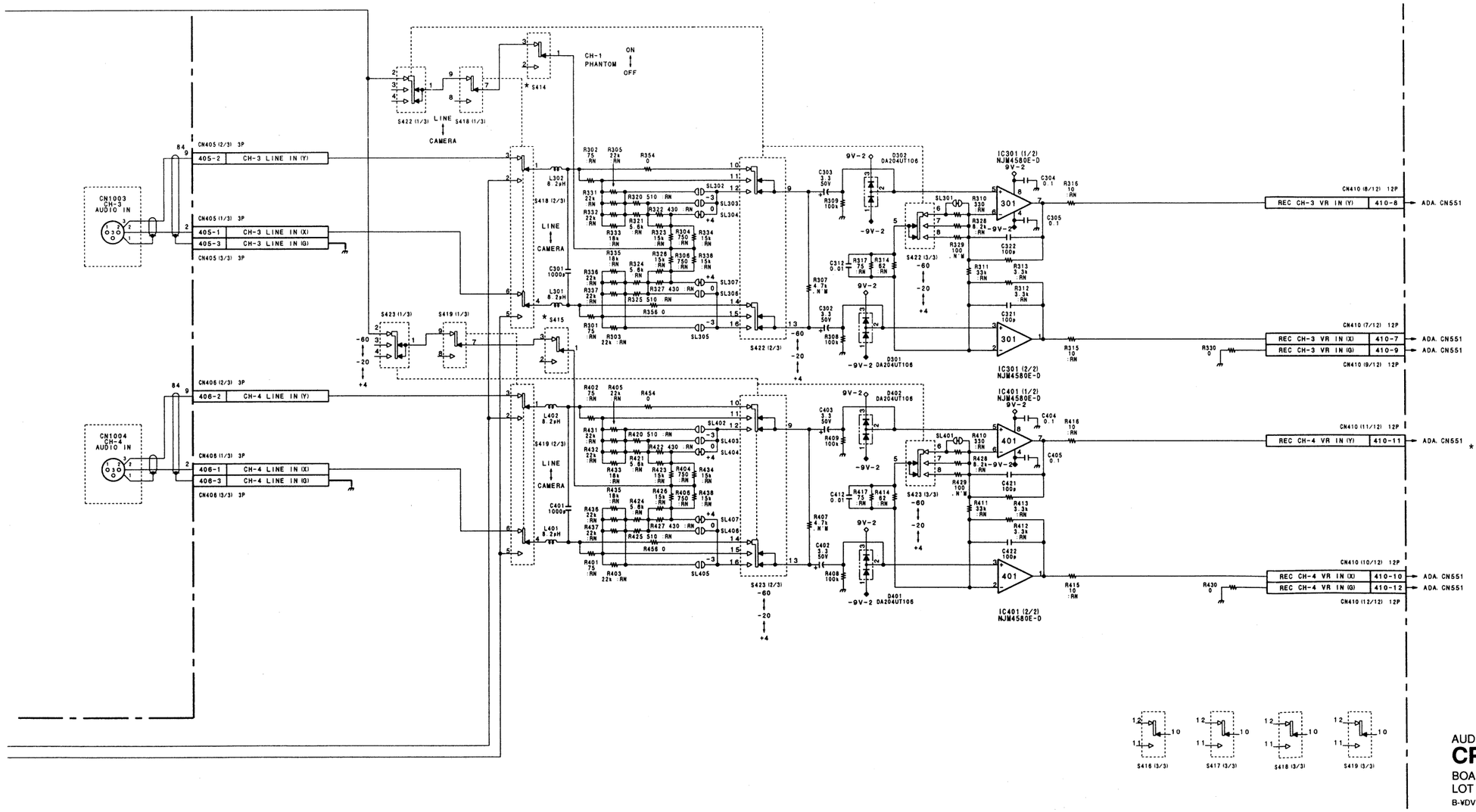

* J MODEL
NO M'T
S412
S413
S414
S415

AUDIO INPUT/OUTPUT, PANEL SWITCHES
CP-260 (1/3)
BOARD NO. 1-657-812-11
LOT NO. 409-
B-VDVW250-CP260-11

I J K L M N O P

DVW-250 (J)
DVW-250 (UC)
DVW-250P (SY)

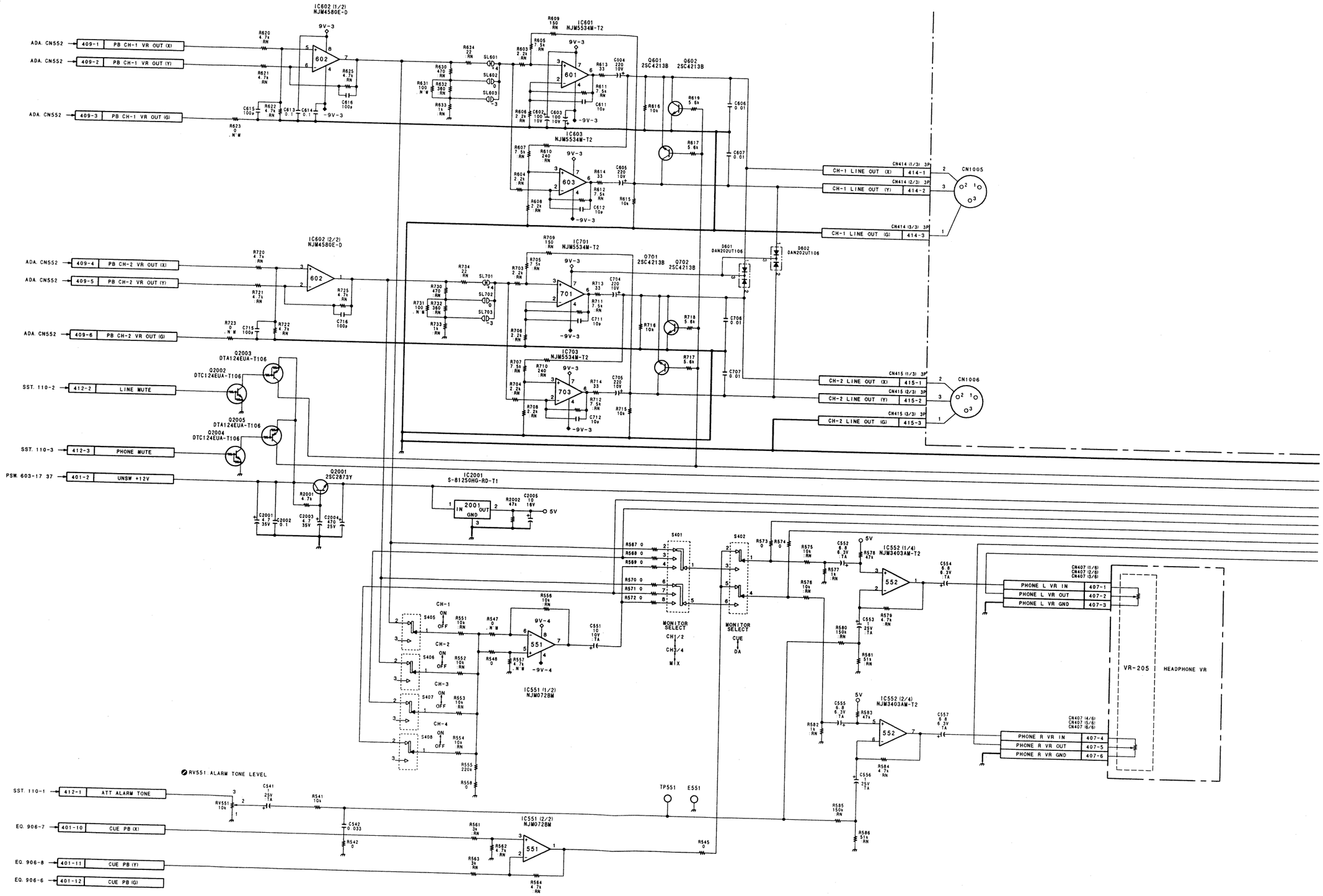

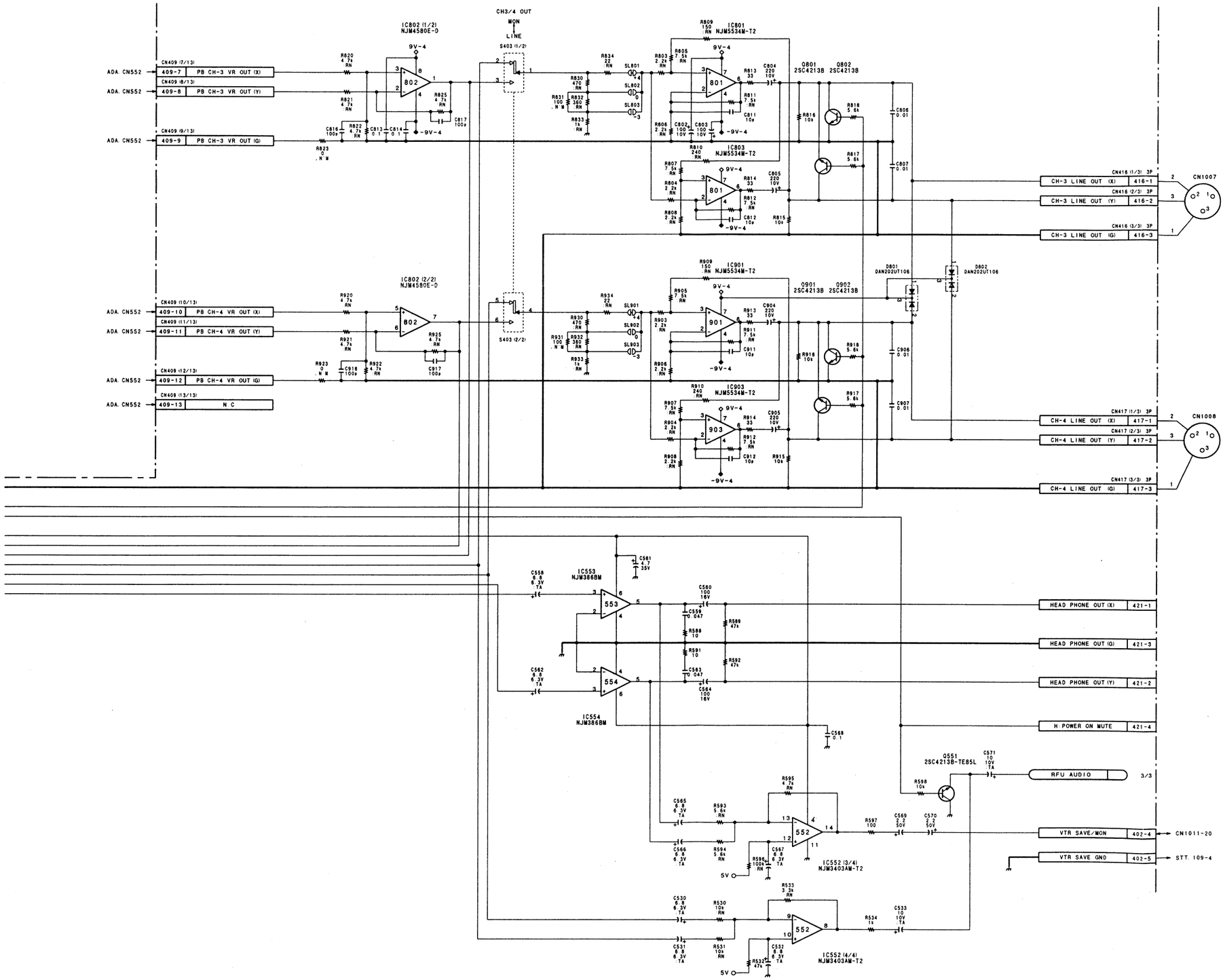

AUDIO INPUT/OUTPUT, PANEL SWITCHES

CP-260 (2/3)

BOARD NO. 1-657-812-11

LOT NO. 409-

B-¥DVW250-CP260-11

DVW-250 (J)
DVW-250 (UC)
DVW-250P (SY)

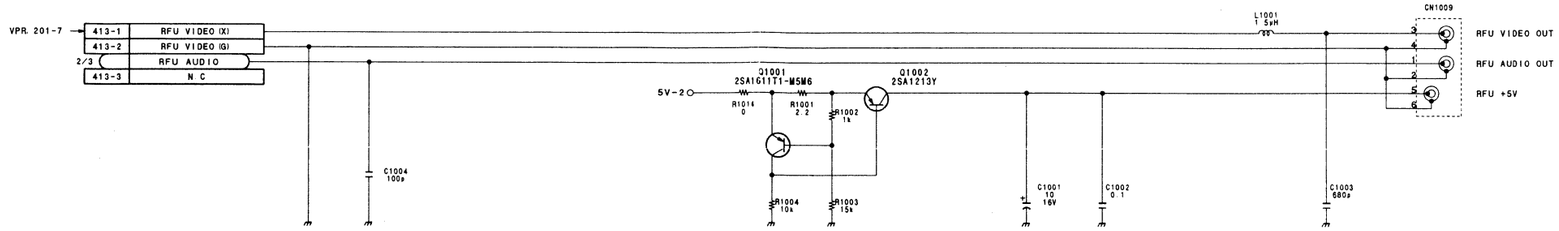

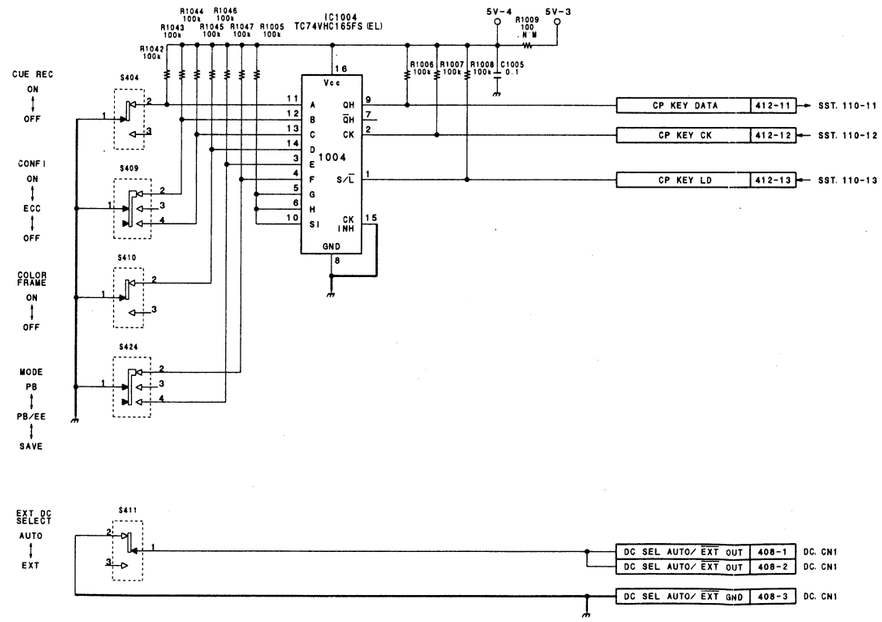

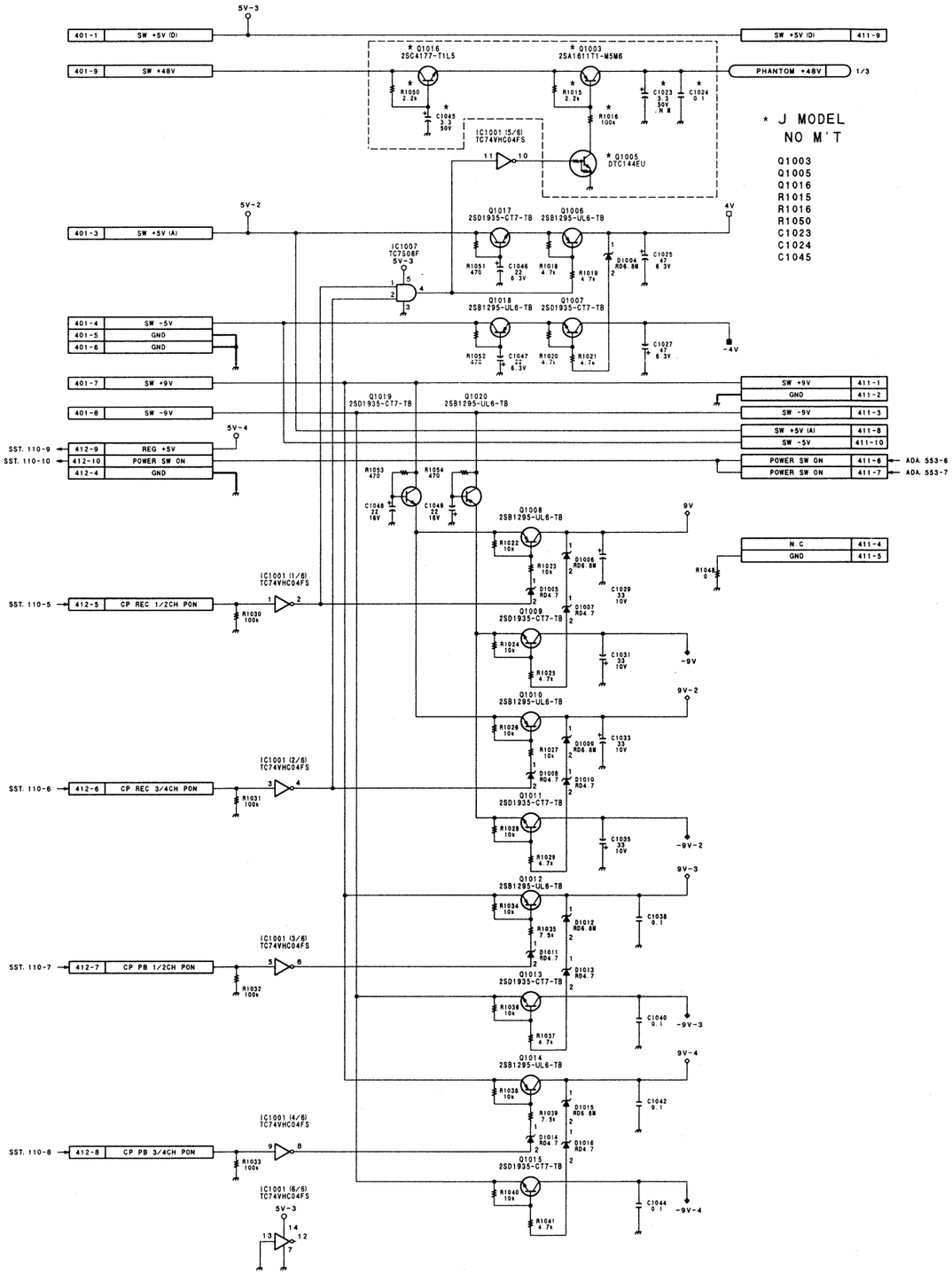

AUDIO INPUT/OUTPUT, PANEL SWITCHES

CP-260 (3/3)

BOARD NO. 1-657-812-11
LOT NO. 409-

B-¥DVW250-CP260-11

DVW-250 (J)
DVW-250 (UC)
DVW-250P (SY)

ADA-44 (1-657-810-11)

CN551	M1	Q207	*E1
CN552	L1	Q208	*F1
CN553	J1	Q351	*L1
CN554	E3	Q352	*L1
CN555	D3	Q353	L1
CN556	B3	Q354	*M1
CN557	*R1	Q355	*L1
CN558	N2	Q356	*L1
CN559	D3	Q357	*M1
		Q358	*M1
D1	*J2	Q359	*L1
D2	*J2	Q360	*L1
D3	*H3	Q361	*H1
D4	*H2	Q362	*J1
D5	*J2	Q364	*H1
D6	*H2	Q365	*J1
D7	*J3	Q366	*G1
D8	*H3	Q367	*J1
D9	*J1	Q368	*G1
D201	*D1	Q369	*J1
D202	*E1		
D351	*R3	RV1	*L3
D354	*G1	RV2	*L2
D355	*F1	RV3	*L2
D356	*H1	RV4	*L2
D357	*H1	RV5	*L3
D358	*J1	RV6	*L2
D359	H1	RV7	*L2
D360	H1	RV8	*L2
D361	*G1	RV40	L3
D362	*H1	RV50	N3
		RV60	N3
E1	F1	RV70	P3
E2	A1	RV201	*A3
		RV202	*A3
IC1	*N2	RV203	*A2
IC2	*L1	RV204	*A2
IC3	*N1	RV205	*C2
IC4	*M1	RV206	*D2
IC5	*K3	RV207	*E2
IC6	*K2	RV208	*E2
IC7	*L1		
IC8	*K1	S1	R3
IC9	H3		
IC10	J3	T1	K3
IC11	G2	T2	K3
IC12	G1	T3	K1
IC201	A3	T4	K1
IC202	A2		
IC203	*B1	* : Soldering Side	
IC204	*C1		
IC205	*C2		
IC206	*D2		
IC207	*D2		
IC208	*E2		
IC209	*D1		
IC210	*E1		
IC310	*F1		
IC351	R3		
IC352	*R1		
IC353	*P1		
IC354	F3		
IC355	F2		
IC356	*R2		
IC357	*G2		
IC358	*G2		
IC359	*F2		
IC360	*F2		
IC361	*R1		
Q1	K1		
Q2	K2		
Q3	K2		
Q4	L1		
Q5	*L1		
Q201	*D1		
Q202	*D1		
Q203	*E1		
Q204	*E1		
Q205	*D1		
Q206	*D1		

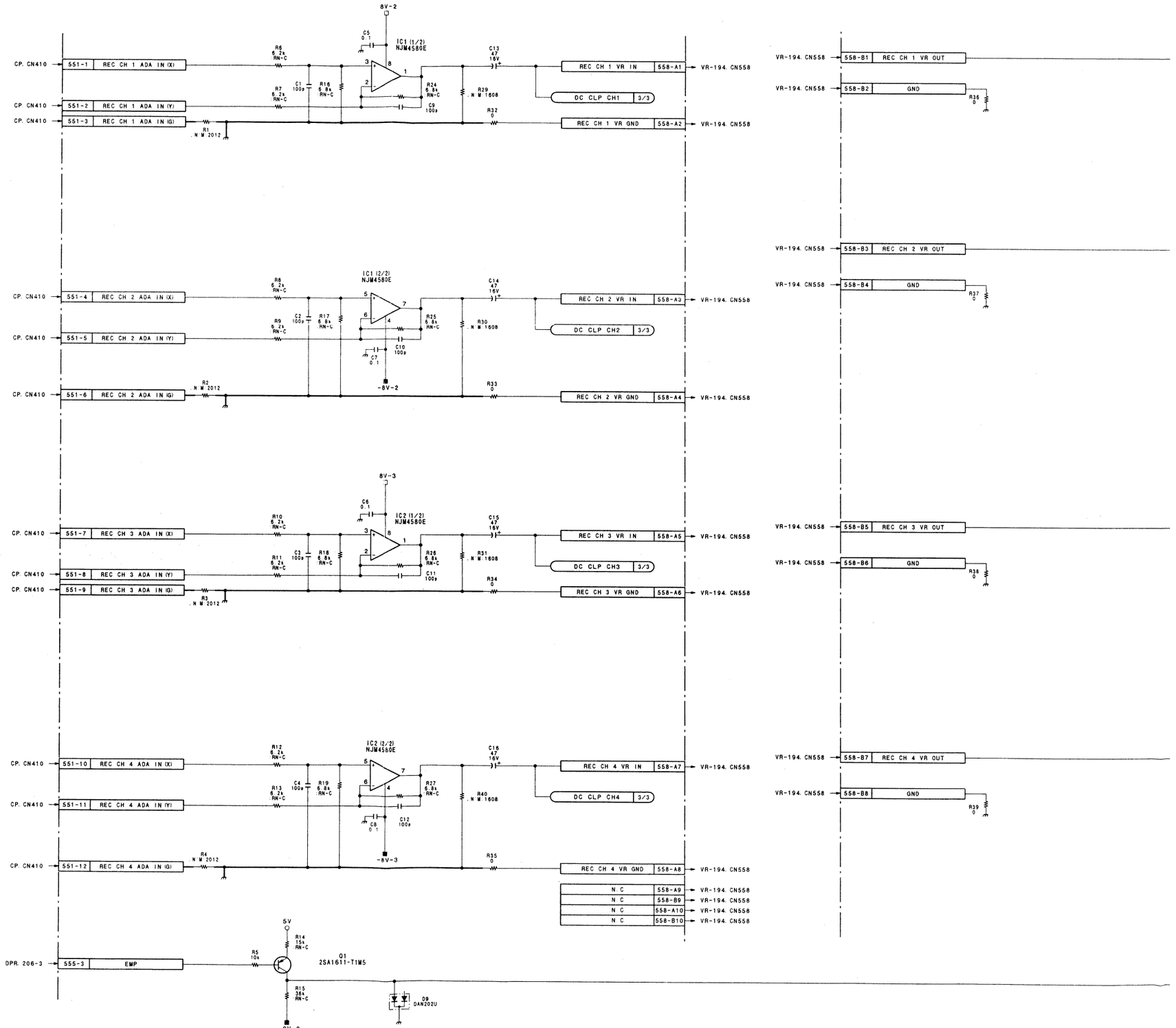

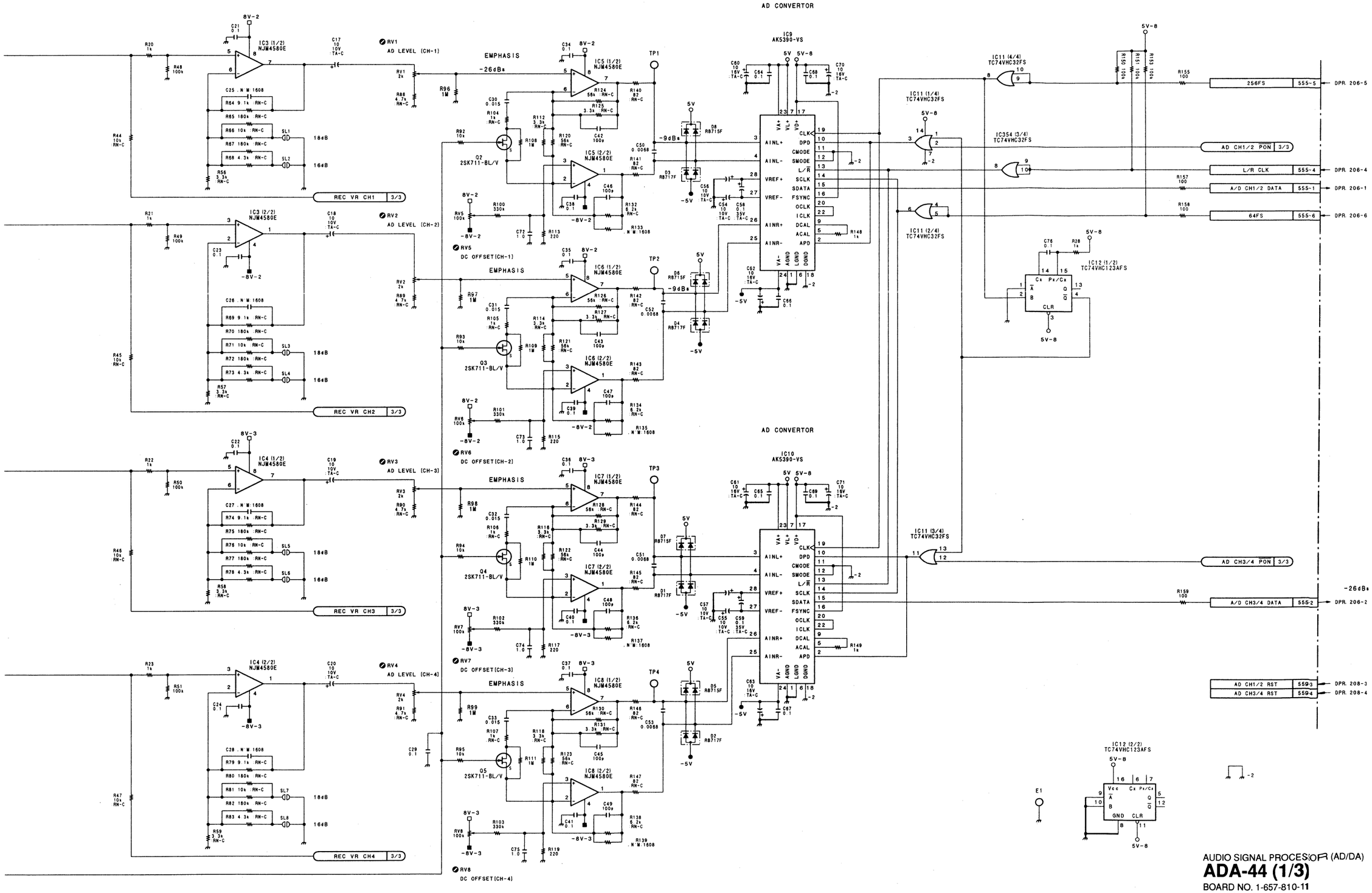

AUDIO SIGNAL PROCESSOR (AD/DA)

ADA-44 (1/3)

BOARD NO. 1-657-810-**11**

LOT NO. 409-

B-VDVW250-ADA44-11

DVW-250 (J)
DVW-250 (UC)
DVW-250P (SY)

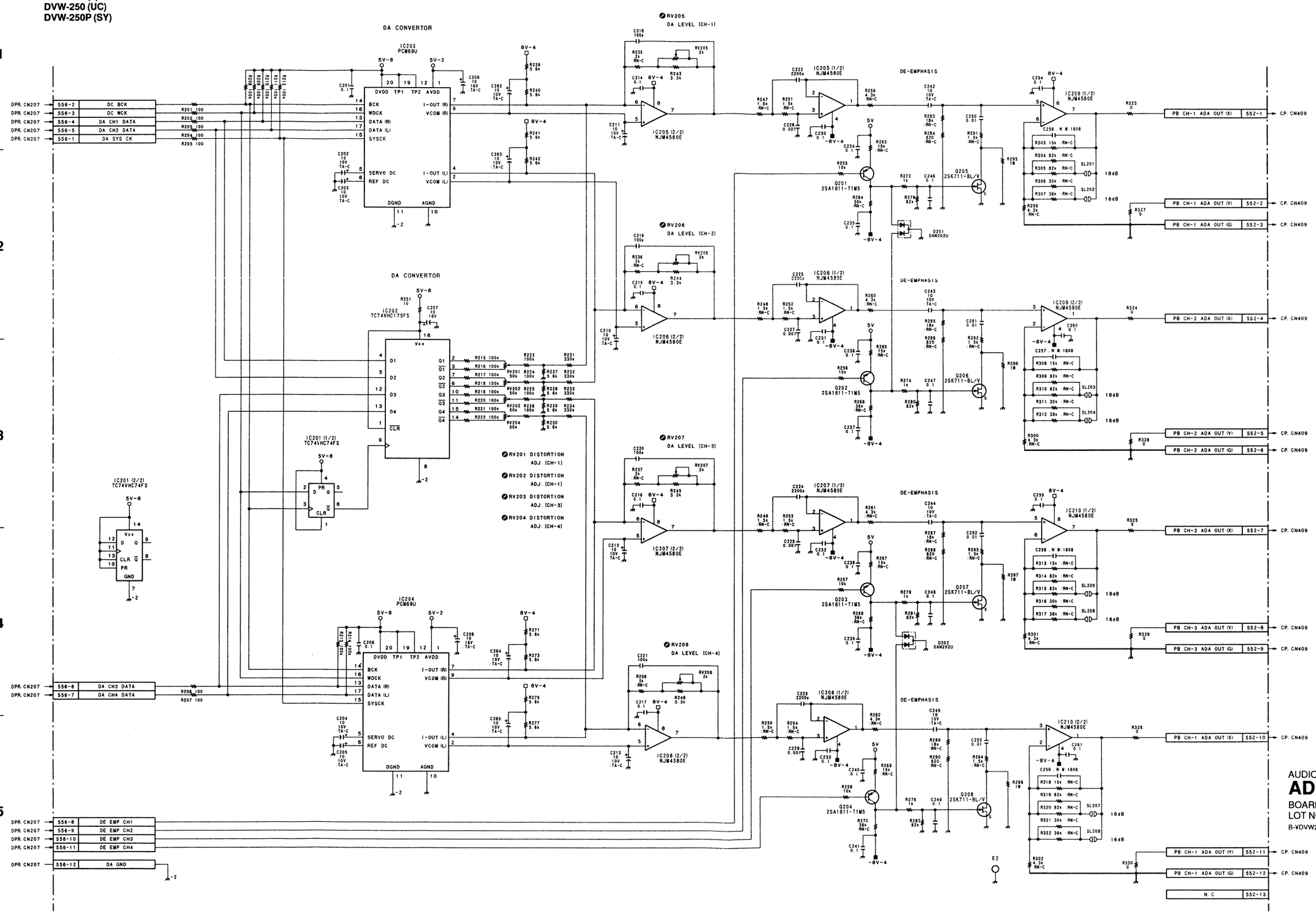

AUDIO SIGNAL PROCESSOR (AD/DA)

ADA-44 (2/3)

BOARD NO. 1-657-810-11
LOT NO. 409-
B-¥DVW250-ADA44-11

DVW-250 (J)
DVW-250 (UC)
DVW-250P (SY)

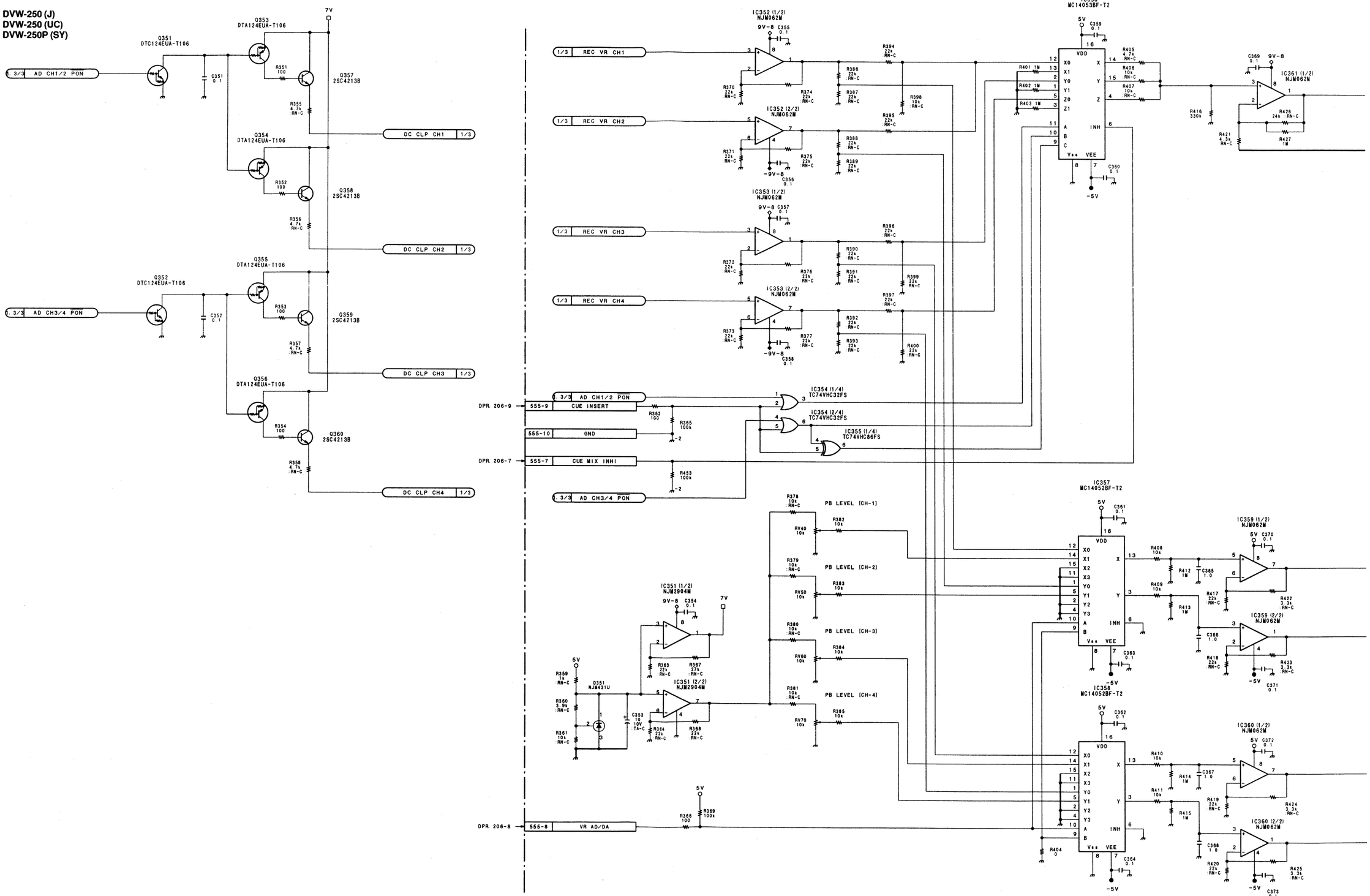

DPR-62 (1/17)

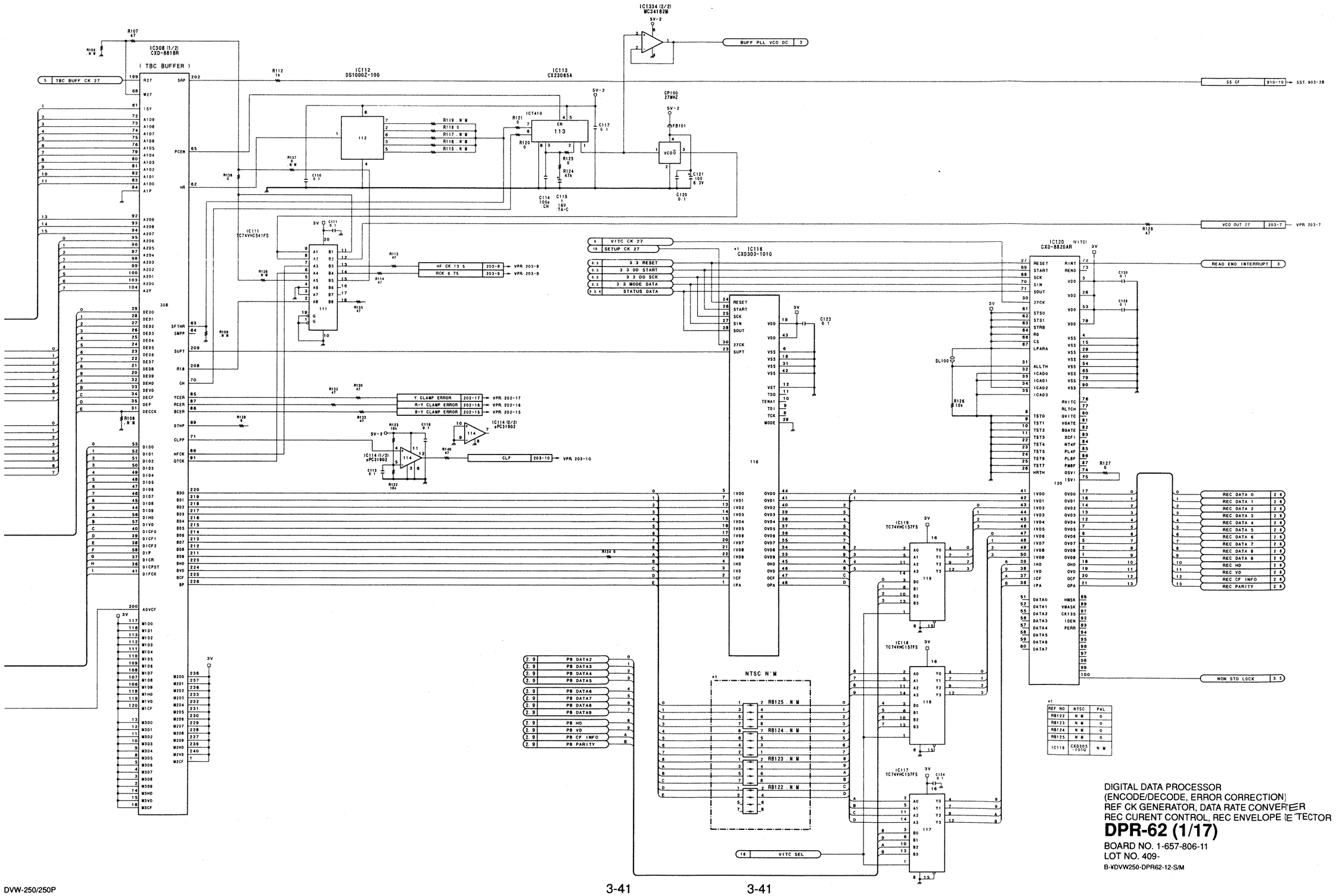

REF. NO.	NTSC	PAL
RB122	N.M	0
RB123	N.M	0
RB124	N.M	0
RB125	N.M	0
IC116	CXD3031010	N.M

DIGITAL DATA PROCESSOR
(ENCODE/DECODE, ERROR CORRECTION)
REF CK GENERATOR, DATA RATE CONVERTER
REC CURENT CONTROL, REC ENVELOPE DETECTOR

DPR-62 (1/17)

BOARD NO. 1-657-806-11
LOT NO. 409-

B-¥DVW250-DPR62-12-S/M

DVW-250 (J)
DVW-250 (UC)
DVW-250P (SY)

DPR-62 (1-657-806-11)

(From 3-40)

IC1603	*F4	RB118	*G6	RB1003	D8
IC1604	*E4	RB119	*G6	RB1004	*C7
IC1605	F3	RB120	*H6	RB1100	A6
IC2500	*H3	RB121	*H6	RB1101	A6
IC2501	*G4	RB126	*H7	RB1102	A3
IC2502	*H4	RB127	*H7	RB1103	A3
IC3000	F3	RB128	*H7	RB1104	A8
IC3001	*F3	RB129	*G7	RB1105	A8
IC3002	F5	RB130	*G7	RB1200	C9
IC5900	F9	RB131	*G7	RB1201	B9
		RB132	*G7	RB1202	C8
L1	A4	RB200	*G9	RB1203	B8
L2	A4	RB201	*G9	RB1204	E9
L3	A5	RB202	*G9	RB1205	D9
L4	B4	RB203	*G9	RB1206	E8
L5	A5	RB204	*G9	RB1207	D8
L6	A3	RB205	J8	RB2500	H4
L7	B3	RB206	J8	RB2501	H4
L10	B4	RB207	*H9	RB2502	*G4
L12	A5	RB208	*H9	RB2503	*H3
L13	A5	RB209	*H9	RB2504	H3
L1300	*F2	RB210	*H9	RB2505	H3
L1301	*F2	RB300	*E6	RB2506	H3
L1302	*E2	RB301	F6	RB2507	H4
L1303	*D1	RB302	E6	RB2508	H4
L1304	*D1	RB500	F2	RB2509	H3
		RB501	*F2	RB2510	H3
Q1100	*B6	RB505	F2	RB2511	H4
Q1101	*B6	RB506	*F2	RB2512	H4
Q1102	*A6	RB507	F2	RB2513	H4
Q1103	*A8	RB508	F3	RB2514	H4
Q1104	*A6	RB509	H2	RB2515	*G4
Q1300	*F3	RB510	H3	RB2516	H4
Q1301	*F2	RB600	H1	RB2517	H4
Q1302	*F2	RB700	D3	RB2518	H4
Q1303	*F2	RB701	*D5	RB2519	H4
Q1304	*E2	RB702	E5	RB2520	H4
Q1305	*F2	RB703	E5		
Q1306	*E2	RB704	D5	TP200	*F9
Q1307	*E2	RB705	D3	TP201	*F9
Q1308	*E2	RB706	D5	TP202	*F9
Q1309	*D2	RB707	D3	TP203	*F9
Q1310	*E2	RB800	C7	TP204	*F9
Q1311	*B1	RB802	*B6	TP205	*F9
Q1312	*B1	RB804	*B5	TP206	*F9
Q1313	*B1	RB805	*C5	TP207	*F9
		RB806	C6	TP300	*F6
RB1	E7	RB807	*B6	TP700	*D4
RB2	E7	RB808	*C6	TP701	*D4
RB3	E7	RB809	*C6	TP702	C6
RB4	E7	RB810	*D6	TP703	*D4
RB5	E8	RB811	*D6	TP704	*D5
RB6	E8	RB813	*B7	TP705	B6
RB7	E7	RB814	*B7	TP706	*H3
RB8	E7	RB815	*C5	TP1001	*J2
RB9	E7	RB816	*C5	TP1002	*J2
RB10	E7	RB817	*B5	TP1003	*D7
RB11	E8	RB818	C6	TP1004	*D7
RB12	E8	RB819	*B6	TP1005	*D6
RB13	E7	RB820	*B6	TP1006	*D6
RB14	E7	RB821	*C6	TP1100	*A9
RB100	*H7	RB822	*C6	TP1101	*A9
RB101	J6	RB900	*C4	TP1300	*E3
RB102	*H7	RB901	*C5	TP1301	*E1
RB103	*H7	RB902	*C4	TP1302	D2
RB104	J6	RB903	*C4	TP1303	D3
RB105	J6	RB904	*C4	TP1400	*J2
RB106	*H7	RB905	*D3		
RB107	*H7	RB906	*B4		
RB108	H6	RB907	*B4		
RB109	*H7	RB908	*B4		
RB110	H6	RB909	*B4		
RB111	H6	RB910	*C4		
RB112	*H7	RB911	*C3		
RB113	*H7	RB912	*C5		
RB114	*H7	RB913	*D5		
RB115	*H7	RB914	*C6		
RB116	*G6	RB1000	*D7		
RB117	*G6	RB1001	D8		

* : Soldering Side

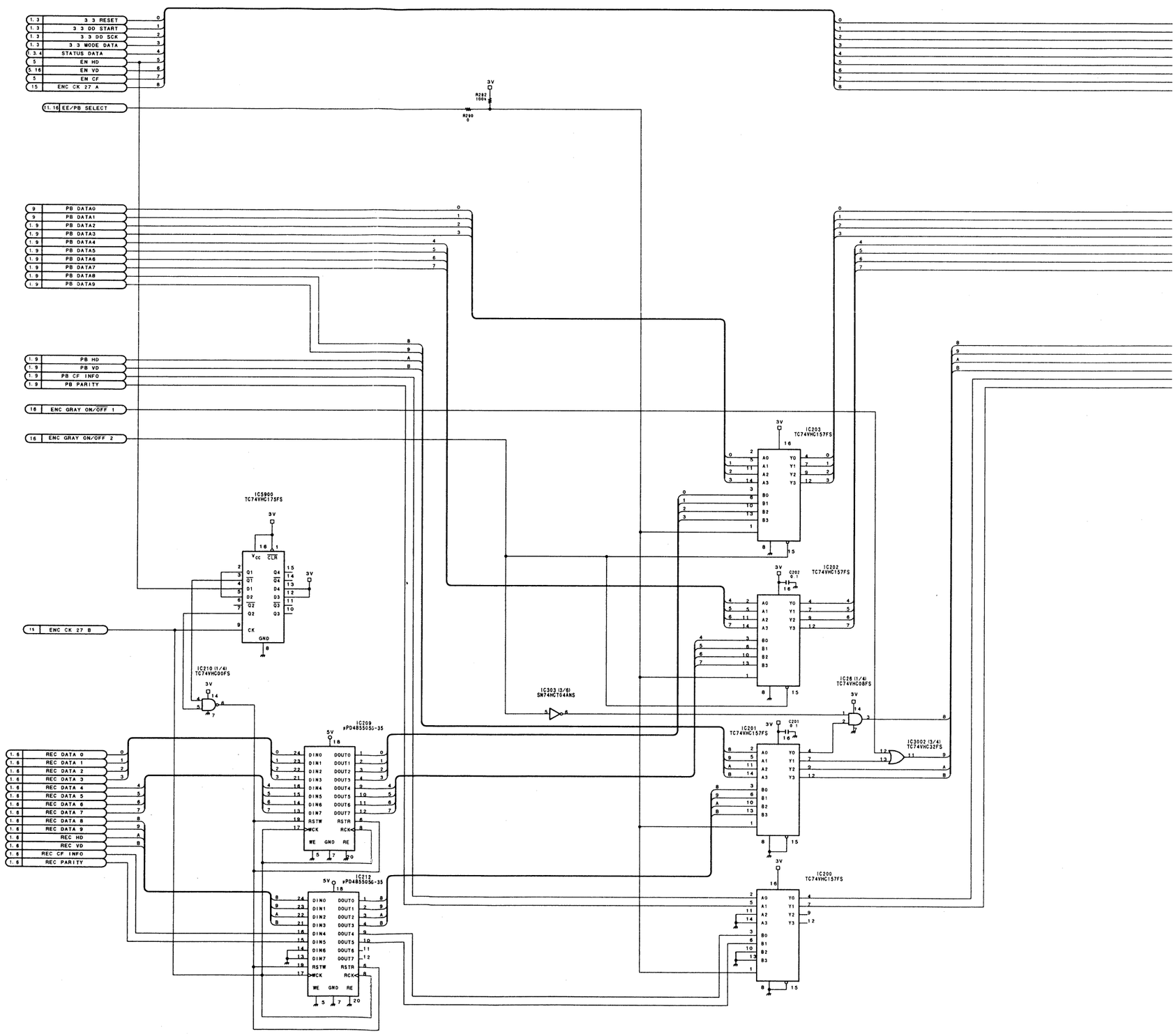

3-42

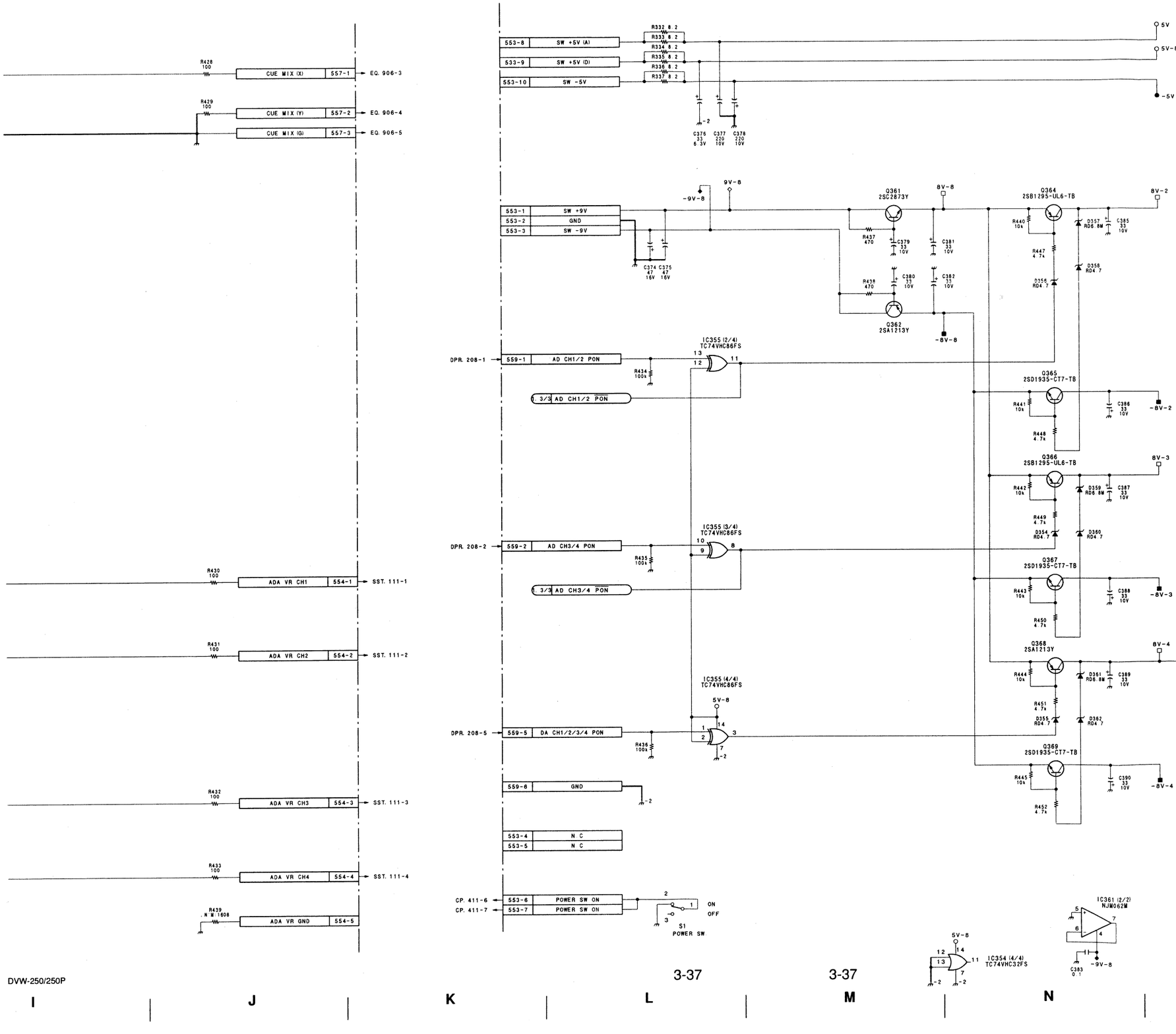

AUDIO SIGNAL PROCESSOR (AD/DA)

ADA-44 (3/3)

BOARD NO. 1-657-810-11

LOT NO. 409-

B-¥DVW250-ADA44-11

VR-194, DUS-339

DVW-250 (J)
DVW-250 (UC)
DVW-250P (SY)

VR-194 (1-657-808-11)

CN1	A2
CN2	A1
CN3	C2
CN4	C1
CN558	*C2
SW1	A2
SW2	A1
SW3	C2
SW4	C1

* : Soldering Side

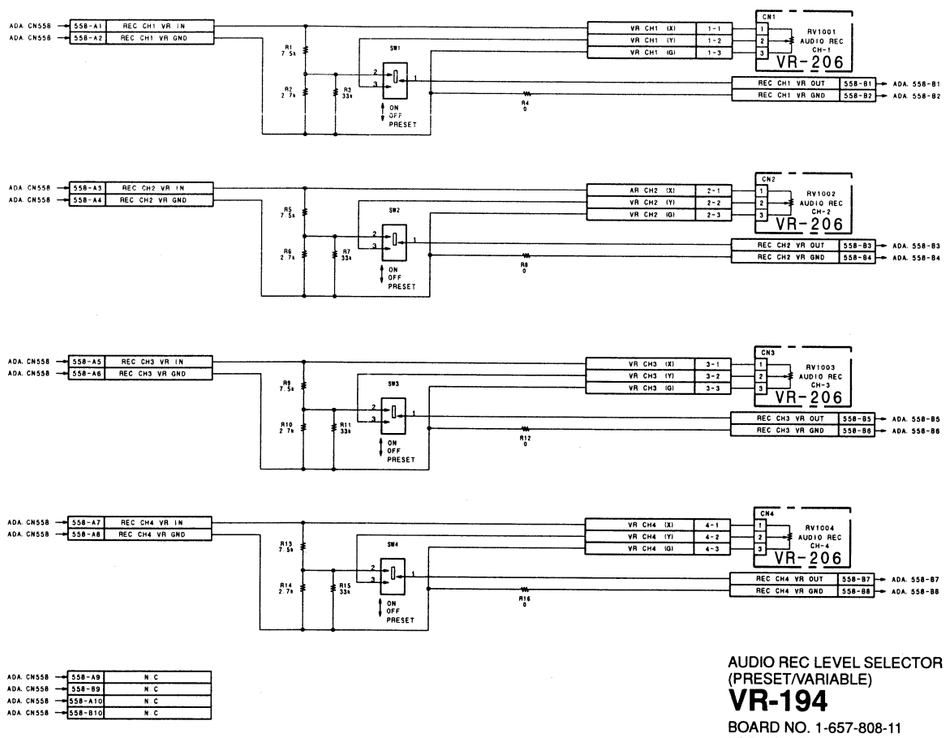

AUDIO REC LEVEL SELECTOR
(PRESET/VARIABLE)
VR-194
BOARD NO. 1-657-808-11
LOT NO. 409-
B-¥DVW250-VR194-11

DUS-339 (1-638-694-11)

CN432	A1
Q1	A1
Q2	A1
Q3	A1
Q4	A1

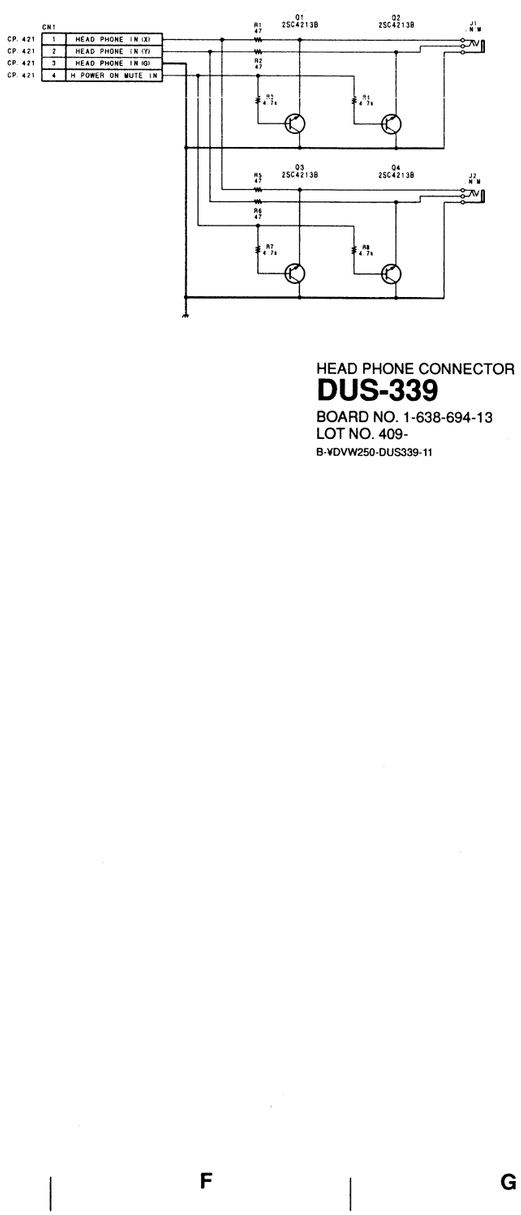

HEAD PHONE CONNECTOR
DUS-339
BOARD NO. 1-638-694-13
LOT NO. 409-
B-¥DVW250-DUS339-11

3-38

DVW-250 (J)
DVW-250 (UC)
DVW-250P (SY)

DPR-62 (1-657-806-11)

CN201	*J2	IC200	*H9	IC1106	B9
CN202	*J4	IC201	*H9	IC1107	*B9
CN203	*J6	IC202	*G9	IC1108	*A3
CN204	*J8	IC203	*G9	IC1109	A8
CN205	D6	IC204	*G9	IC1111	*E9
CN206	H2	IC205	G8	IC1112	A8
CN207	H2	IC206	*H8	IC1113	B8
CN208	H3	IC207	*H8	IC1114	*A6
CN211	E3	IC208	J9	IC1115	*B6
CN212	E5	IC209	*G8	IC1116	*A7
CN213	E6	IC210	F9	IC1117	*B7
CN908	A9	IC211	*H9	IC1118	*A7
CN909	A7	IC212	*H8	IC1119	*B7
CN910	A5	IC213	*H9	IC1120	*A7
CN911	A3	IC214	*H9	IC1121	B8
		IC300	*G6	IC1122	A9
CP100	H5	IC301	E6	IC1124	A9
CP200	G9	IC302	*F6	IC1200	C9
CP1100	*B9	IC303	*G6	IC1201	C9
CP1300	E1	IC304	H5	IC1202	C8
CP1301	B2	IC305	G5	IC1203	C8
CP1302	B1	IC306	*G6	IC1204	E9
		IC307	*G5	IC1205	D9
D200	*H9	IC308	G7	IC1206	E8
D301	*G5	IC309	*G7	IC1207	D8
D302	*G5	IC310	F6	IC1300	*F1
D303	*G5	IC311	F7	IC1301	F1
D304	*F5	IC312	F8	IC1302	E1
D305	*H5	IC313	*G7	IC1303	F3
D1001	*D7	IC314	E6	IC1304	E3
D1100	*B6	IC316	*F6	IC1305	E1
D1101	*C9	IC500	F2	IC1306	D1
D1102	*E9	IC501	*G3	IC1307	F2
D1300	*E1	IC502	G2	IC1308	*E1
D1301	*E2	IC503	*H2	IC1309	F2
D1302	D2	IC600	H2	IC1310	E1
D1303	*E2	IC601	G2	IC1311	*E2
D1304	*D2	IC602	G2	IC1312	F2
D1305	*C1	IC603	*H2	IC1313	*E1
D1306	*C1	IC604	*G2	IC1314	E2
D1307	*B1	IC605	*H1	IC1315	*D2
D1308	*C1	IC606	*G1	IC1316	D2
D1400	B1	IC700	E4	IC1317	*D2
		IC701	*E5	IC1318	*E2
E1100	*A9	IC702	*F5	IC1319	*D2
E1300	D2	IC704	*E5	IC1320	D2
E1301	*E3	IC705	*F5	IC1321	*C2
E1500	*J8	IC706	G4	IC1322	*B2
E1501	H6	IC707	*G4	IC1323	*B2
E1502	*D5	IC708	*G5	IC1324	*C2
E1503	H1	IC800	D7	IC1325	*D2
		IC801	*C6	IC1326	*D2
FB1	*A9	IC802	*B5	IC1327	*C2
FB2	*A3	IC803	*B5	IC1328	*B3
FB101	*H5	IC807	C5	IC1329	C1
FB201	*H9	IC808	*C6	IC1330	B3
FB1301	*E1	IC809	*C6	IC1331	*C2
FB1303	*B2	IC811	D4	IC1332	B2
FB1304	*B1	IC812	C4	IC1333	*D1
		IC813	B4	IC1334	*B2
IC4	*E8	IC900	*C4	IC1335	C1
IC20	*E7	IC901	*C3	IC1336	C2
IC21	*E7	IC902	*B4	IC1337	C2
IC22	*E7	IC903	*B3	IC1338	C2
IC25	*E8	IC904	*C5	IC1339	*B2
IC26	D8	IC1000	C7	IC1340	C1
IC103	J7	IC1001	D7	IC1341	*B1
IC104	J7	IC1002	D8	IC1342	*B1
IC105	*F6	IC1003	D7	IC1343	*B2
IC106	*G6	IC1004	*C7	IC1344	*A2
IC107	*H6	IC1005	*B8	IC1345	A3
IC108	*H6	IC1006	C7	IC1346	A2
IC111	*H7	IC1007	*C7	IC1348	A2
IC112	*H5	IC1008	C7	IC1349	A1
IC113	H5	IC1009	B7	IC1600	*F3
IC114	*H8	IC1011	C8	IC1601	*E3
IC116	*F7	IC1013	C7	IC1602	*F3
IC117	*F8	IC1014	B8		
IC118	*F8	IC1103	A9		
IC119	*F8	IC1104	B9		
IC120	*F8	IC1105	*C9		

* : Soldering Side

(Continued to 3-42)

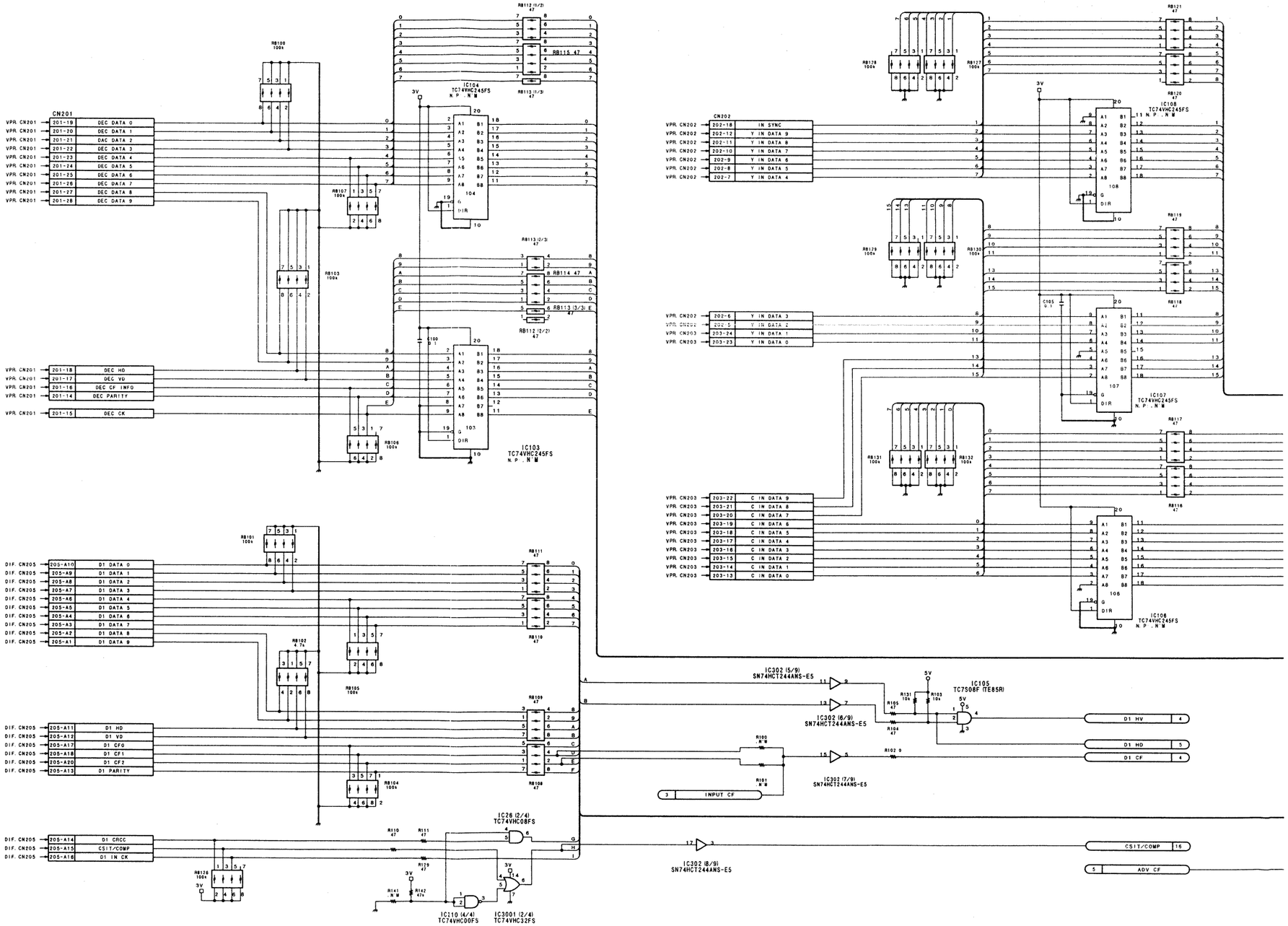

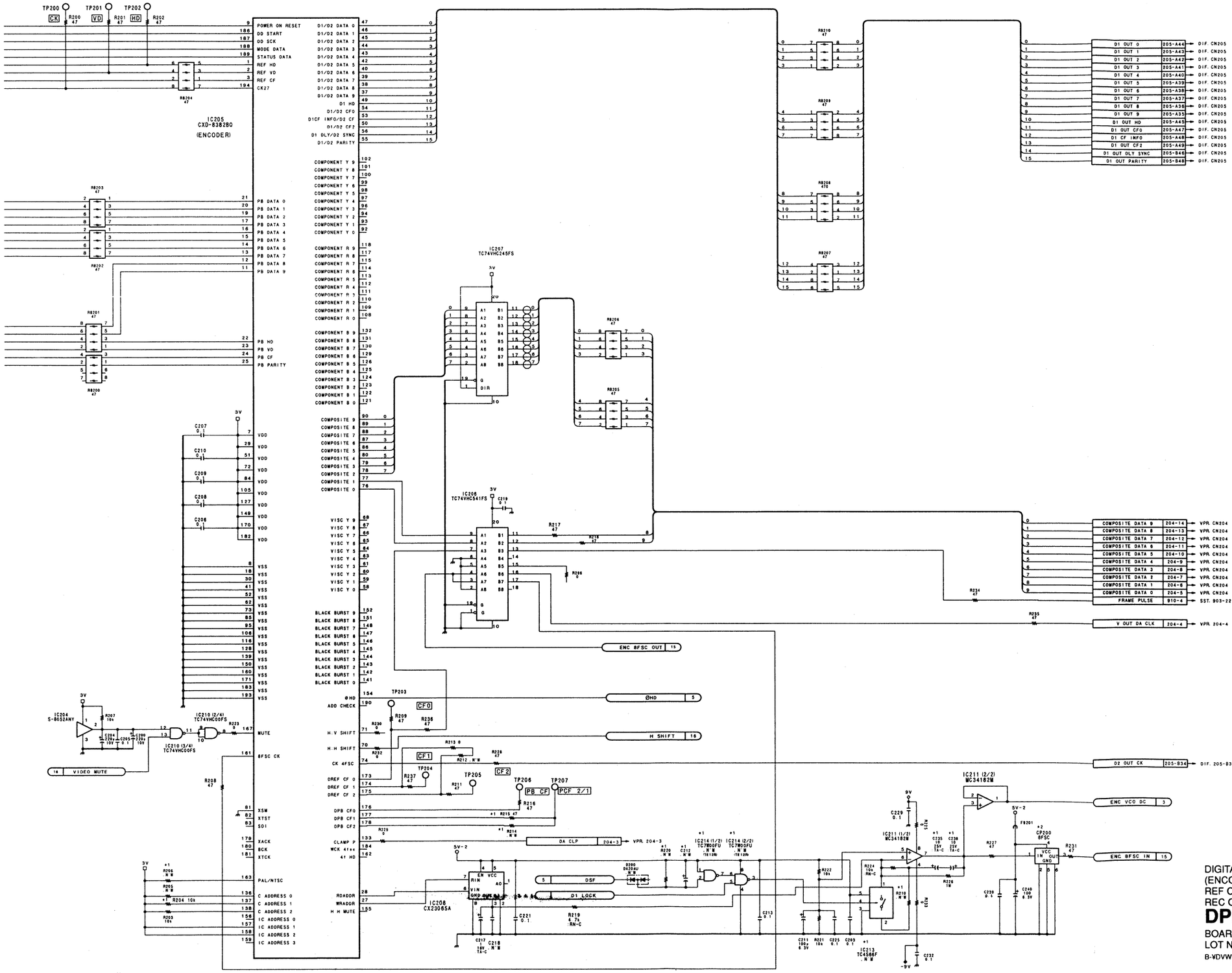

*1		
REF NO	NTSC	PAL
C212	N.M	4.7 u
C235	10 u	68 u
C238	10 u	68 u
IC213	N.M	MOUNT
IC214	N.M	MOUNT
D200	N.M	MOUNT
R210	N.M	1.2K
R220	N.M	470K
R214	N.M	47
R215	47	N.M
R204	10K	.N.M
R206	.N.M	10K

*2		
CP200	28.6363 MHZ	35.4689 MHZ

DIGITAL DATA PROCESSOR
(ENCODE/DECODE, ERROR CORRECTION)
REF CK GENERATOR, DATA RATE CONVERTER
REC CURENT CONTROL, REC ENVELOPE DETECTOR

DPR-62 (2/17)

BOARD NO. 1-657-806-11
LOT NO. 409-

B-¥DVW250-DPR62-12-S/M

DVW-250 (J)
DVW-250 (UC)
DVW-250P (SY)

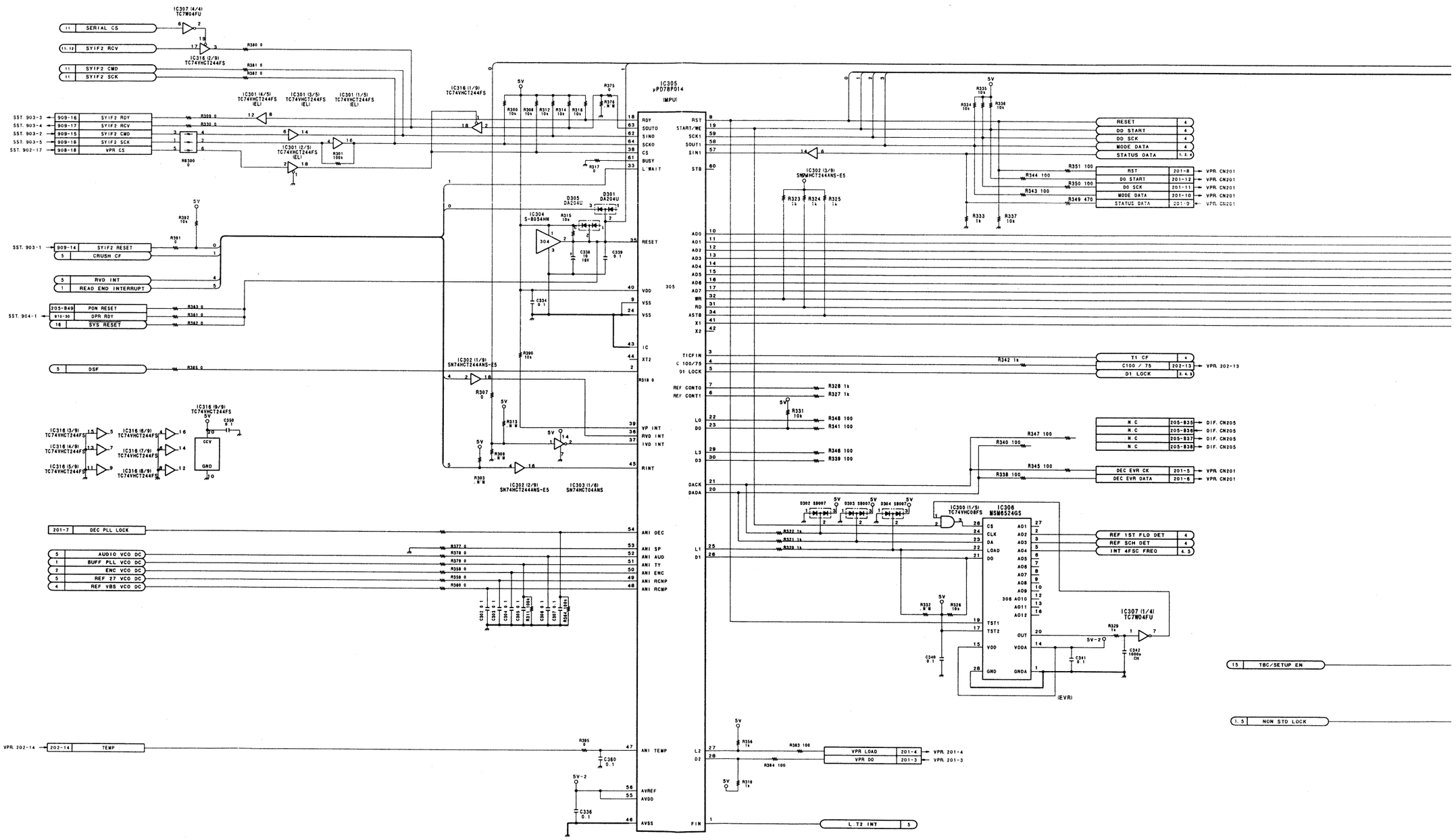

DPR-62 (3/17)

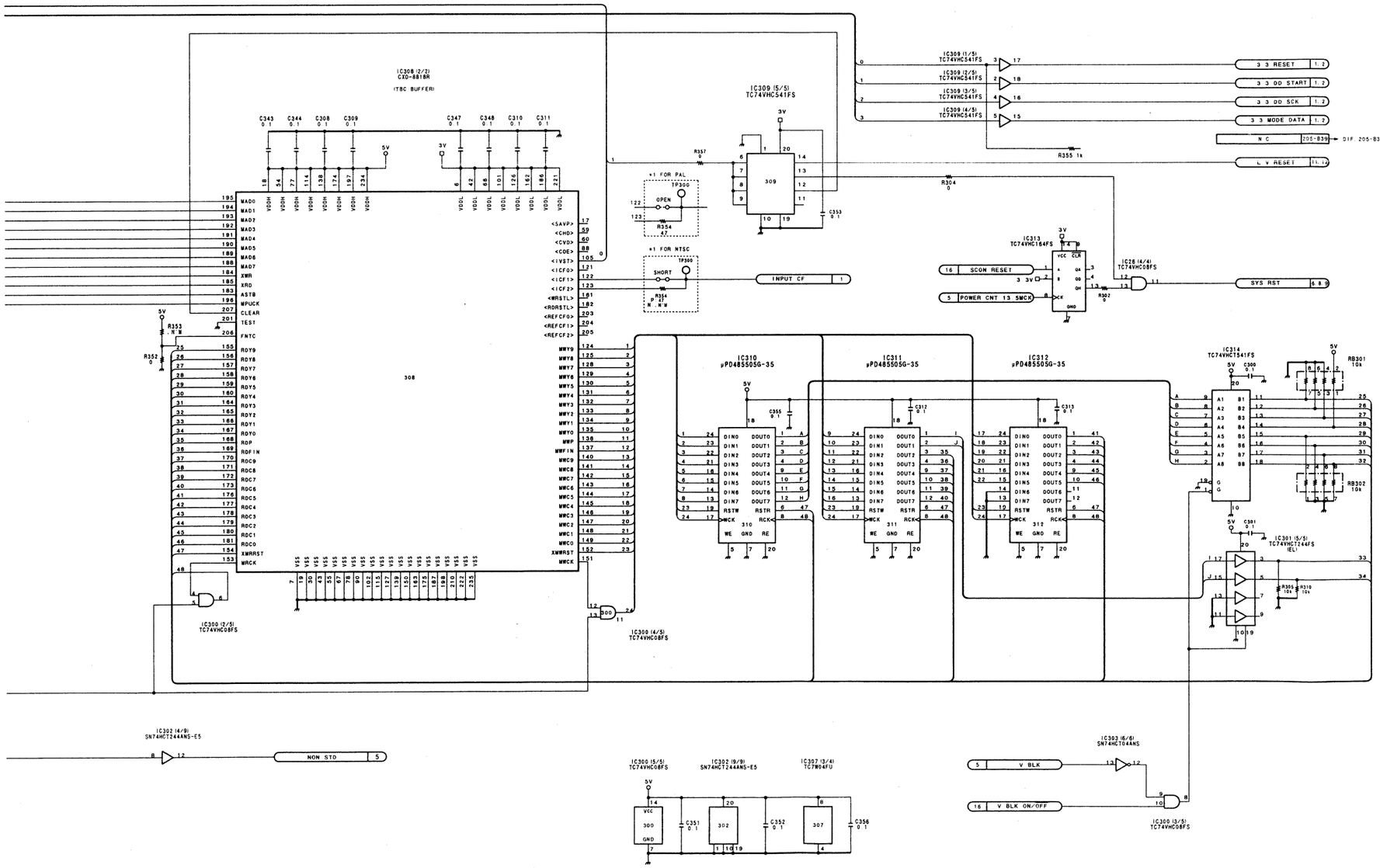

DIGITAL DATA PROCESSOR
(ENCODE/DECODE, ERROR CORRECTION)
REF CK GENERATOR, DATA RATE CONVERTER
REC CURENT CONTROL, REC ENVELOPE DETECTOR

DPR-62 (3/17)

BOARD NO. 1-657-806-11
LOT NO. 409-

B-¥DVW250-DPR62-12-S/M

DVW-250 (J)
DVW-250 (UC)
DVW-250P (SY)

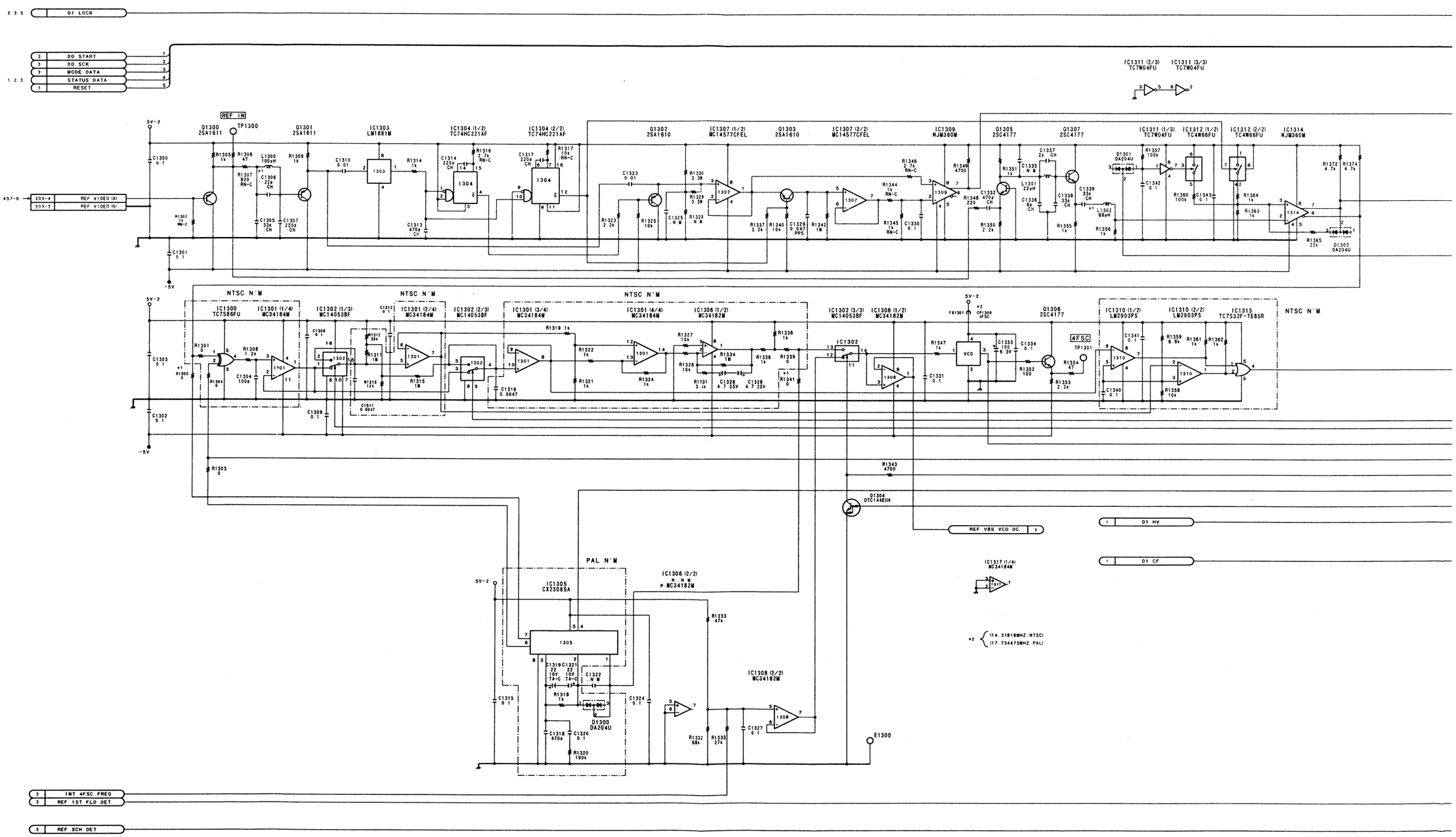

DPR-62 (4/17)

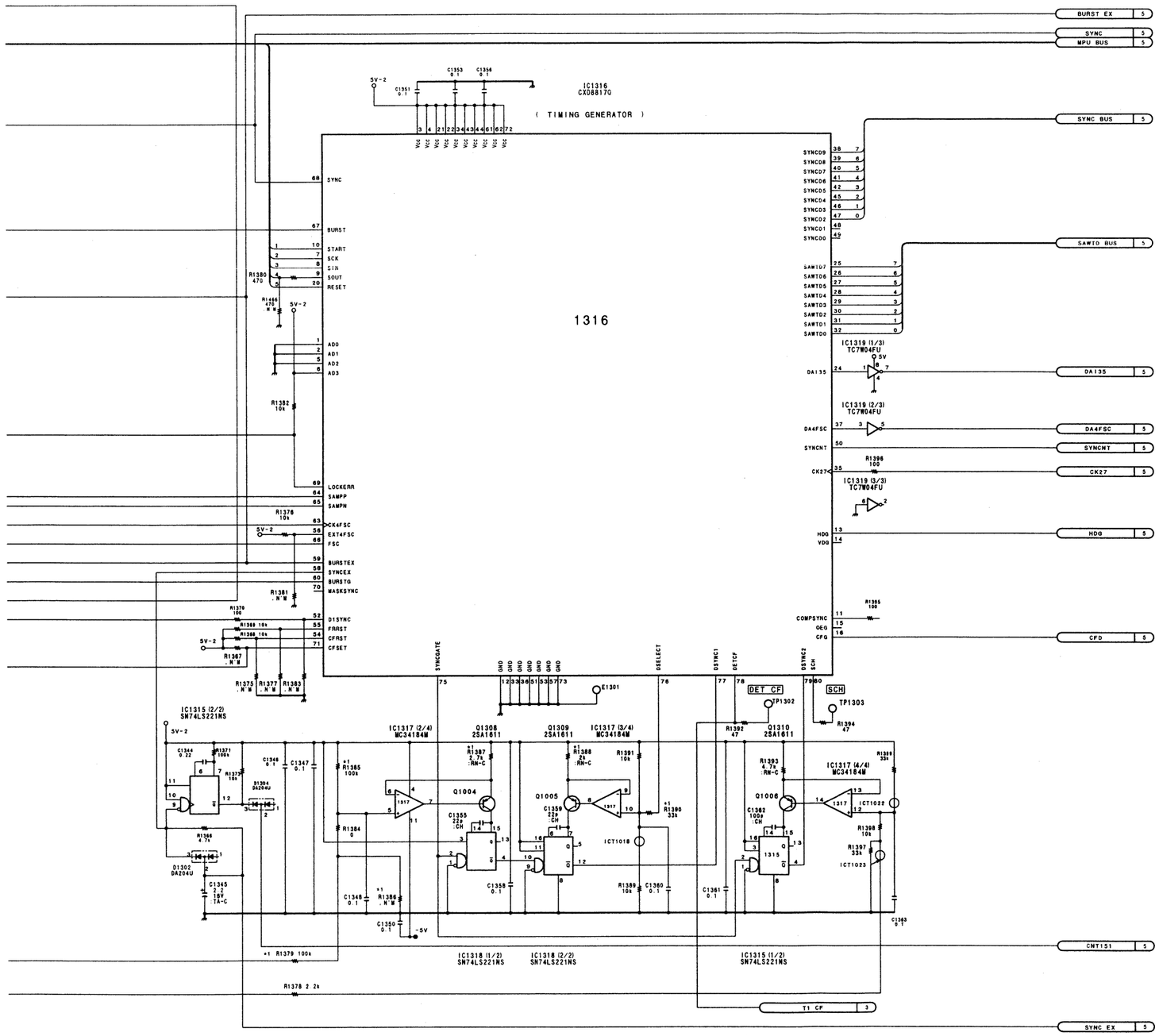

*1		
REF NO.	NTSC	PAL
C1306	22p	N.M
L1302	68μF	39μH
R1300	0	N.M
R1341	0	N.M
R1379	100K	22K
R1385	100K	22K
R1386	N.M	82K
R1387	2.7K	4.7K
R1388	2K	1K
R1390	33K	22K

DIGITAL DATA PROCESSOR
(ENCODE/DECODE, ERROR CORRECTION)
REF CK GENERATOR, DATA RATE CONVERTER
REC CURENT CONTROL, REC ENVELOPE DETECTOR

DPR-62 (4/17)

BOARD NO. 1-657-806-11
LOT NO. 409-

B-¥DVW250-DPR62-12-S/M

DPR-62 (5/17)

DVW-250 (J)
DVW-250 (UC)
DVW-250P (SY)

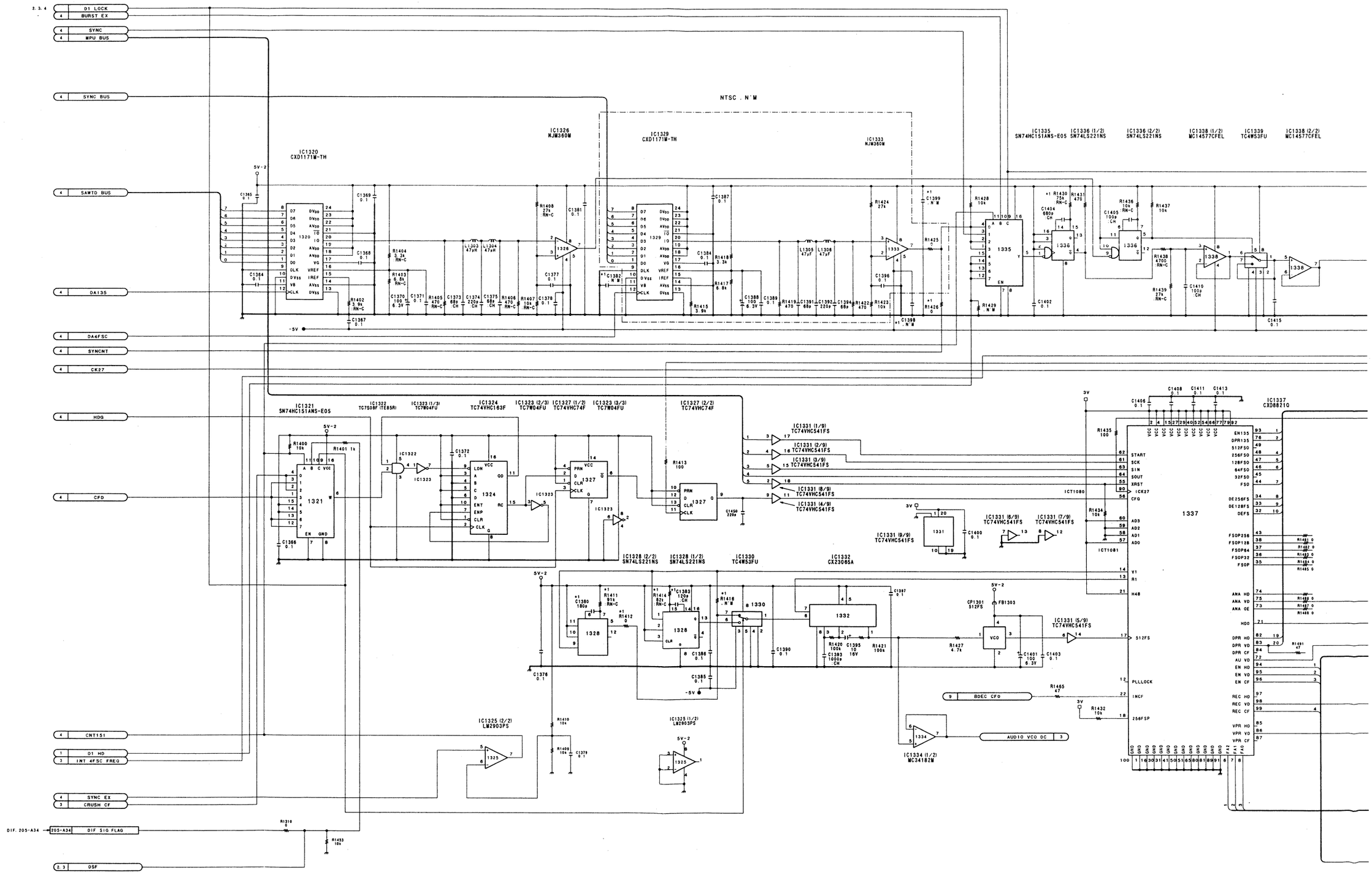

3-48

DPR-62 (5/17)

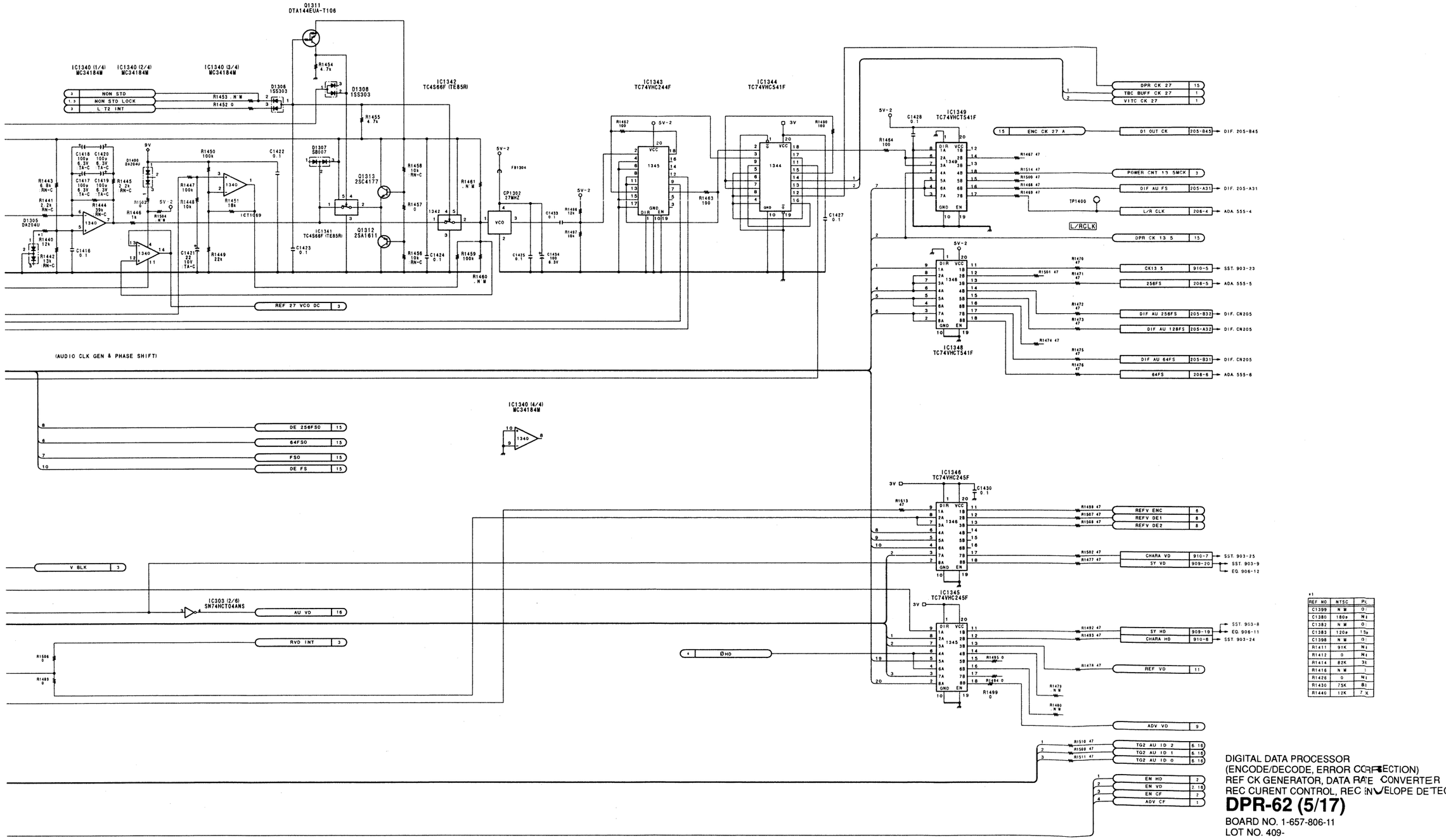

REF NO.	NTSC	PC
C1399	N M	0
C1380	180P	N1
C1382	N M	0
C1383	120P	1S
C1398	N M	0
R1411	91K	N1
R1412	0	N1
R1414	82K	3K
R1416	N M	-
R1420	0	N1
R1430	75K	8J
R1440	12K	7K

DIGITAL DATA PROCESSOR
(ENCODE/DECODE, ERROR CORRECTION)
REF CK GENERATOR, DATA RATE CONVERTER
REC CURENT CONTROL, REC ENVELOPE DETECTO

DPR-62 (5/17)

BOARD NO. 1-657-806-11
LOT NO. 409-
B-¥DVW250-DPR62-12-S/M

DPR-62 (6/17)

DVW-250 (J)
DVW-250 (UC)
DVW-250P (SY)

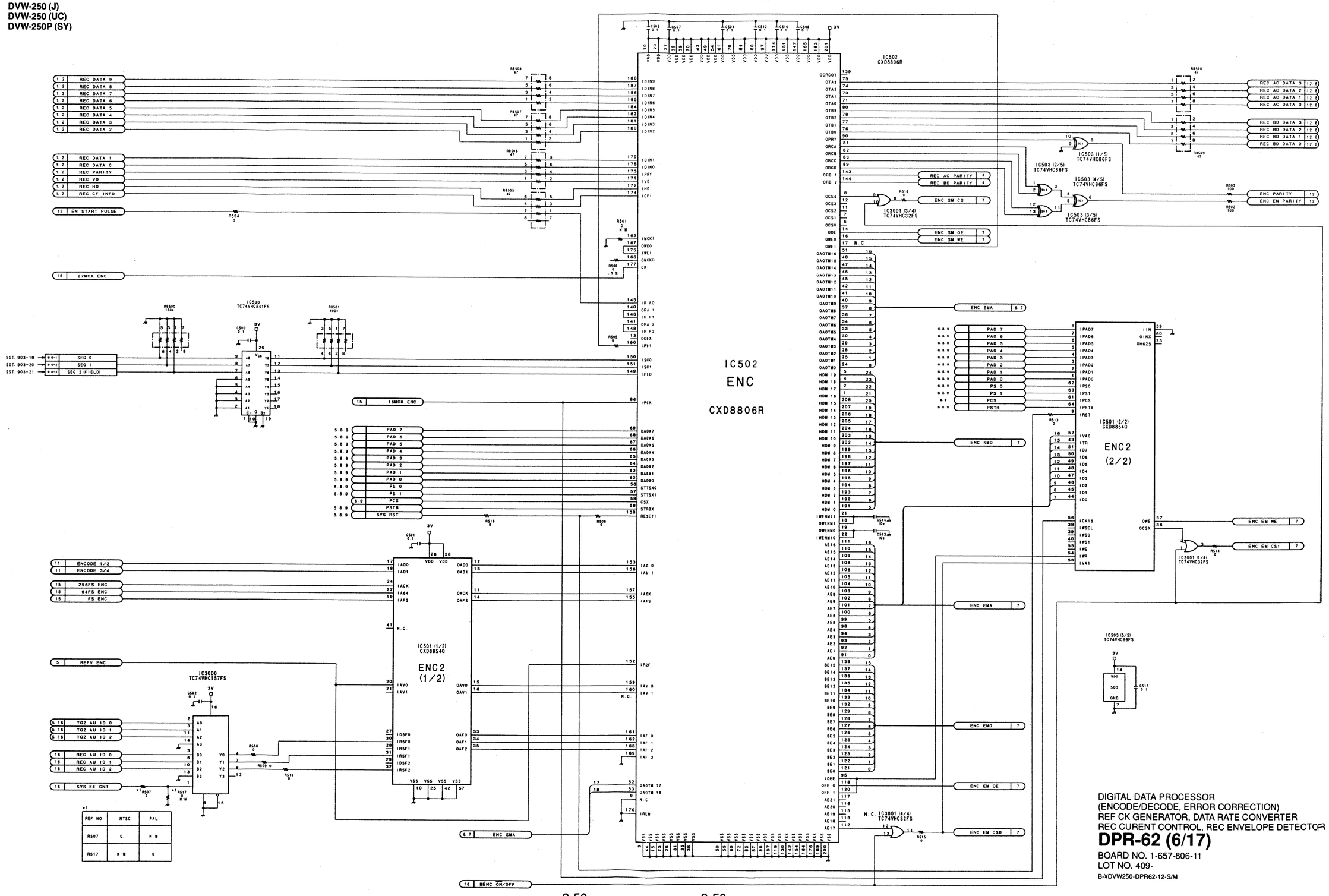

DIGITAL DATA PROCESSOR
(ENCODE/DECODE, ERROR CORRECTION)
REF CK GENERATOR, DATA RATE CONVERTER
REC CURENT CONTROL, REC ENVELOPE DETECTOR

DPR-62 (6/17)

BOARD NO. 1-657-806-11
LOT NO. 409-

B-¥DVW250-DPR62-12-S/M

DPR-62 (7/17)

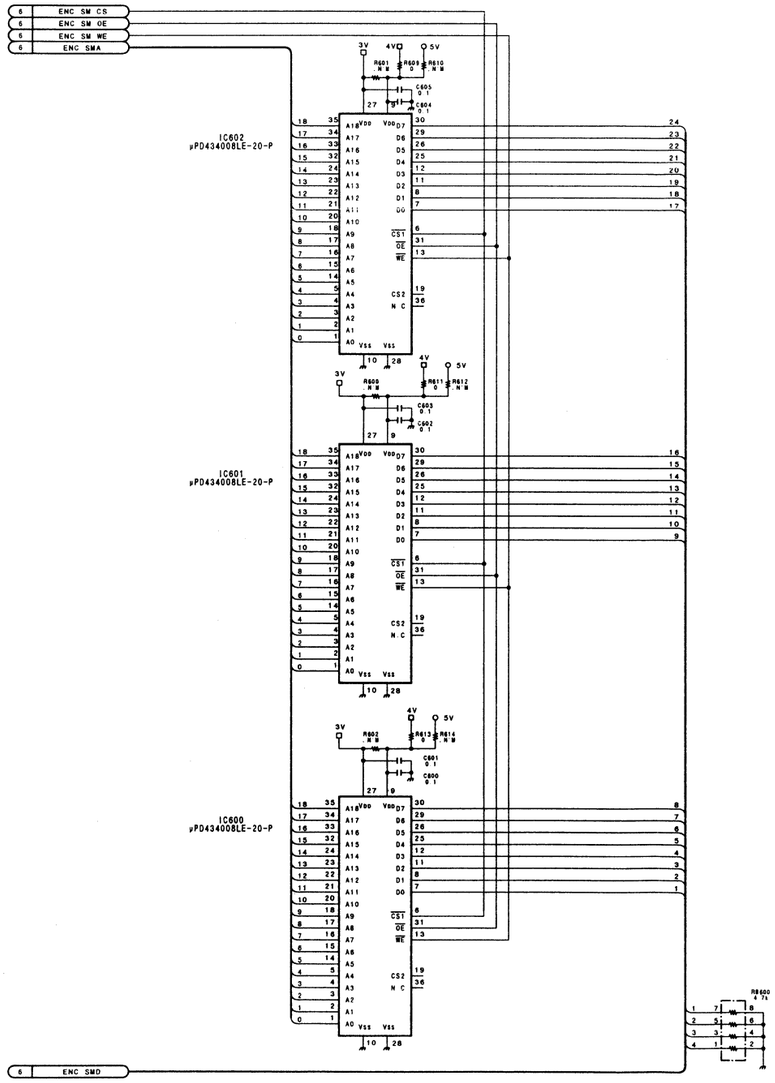

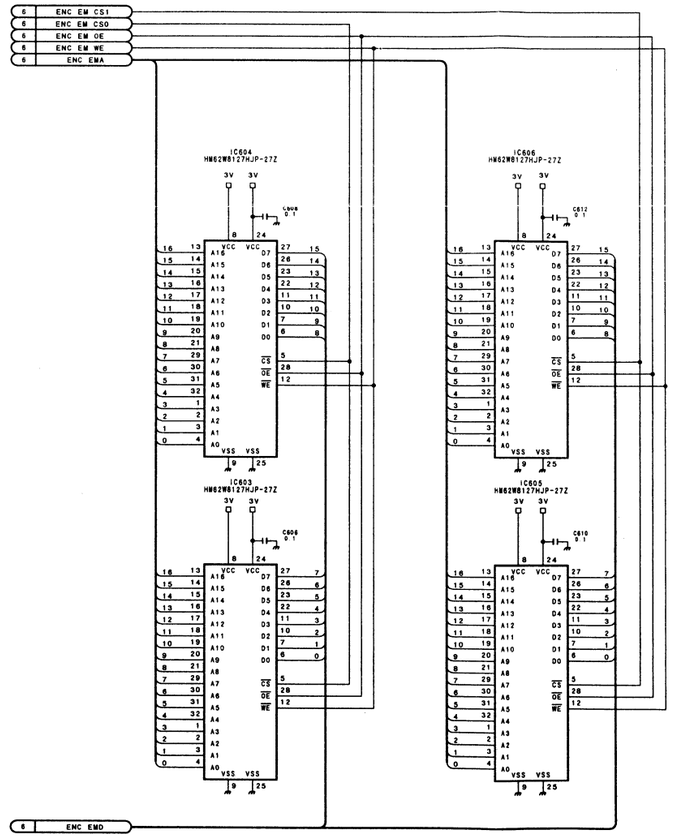

DIGITAL DATA PROCESSOR
(ENCODE/DECODE, ERROR CORRECTION)
REF CK GENERATOR, DATA RATE CONVERTER
REC CURENT CONTROL, REC ENVELOPE DETECTOR

DPR-62 (7/17)

BOARD NO. 1-657-806-11
LOT NO. 409-

B-VDVW250-DPR62-12-S/M

DVW-250 (J)
DVW-250 (UC)
DVW-250P (SY)

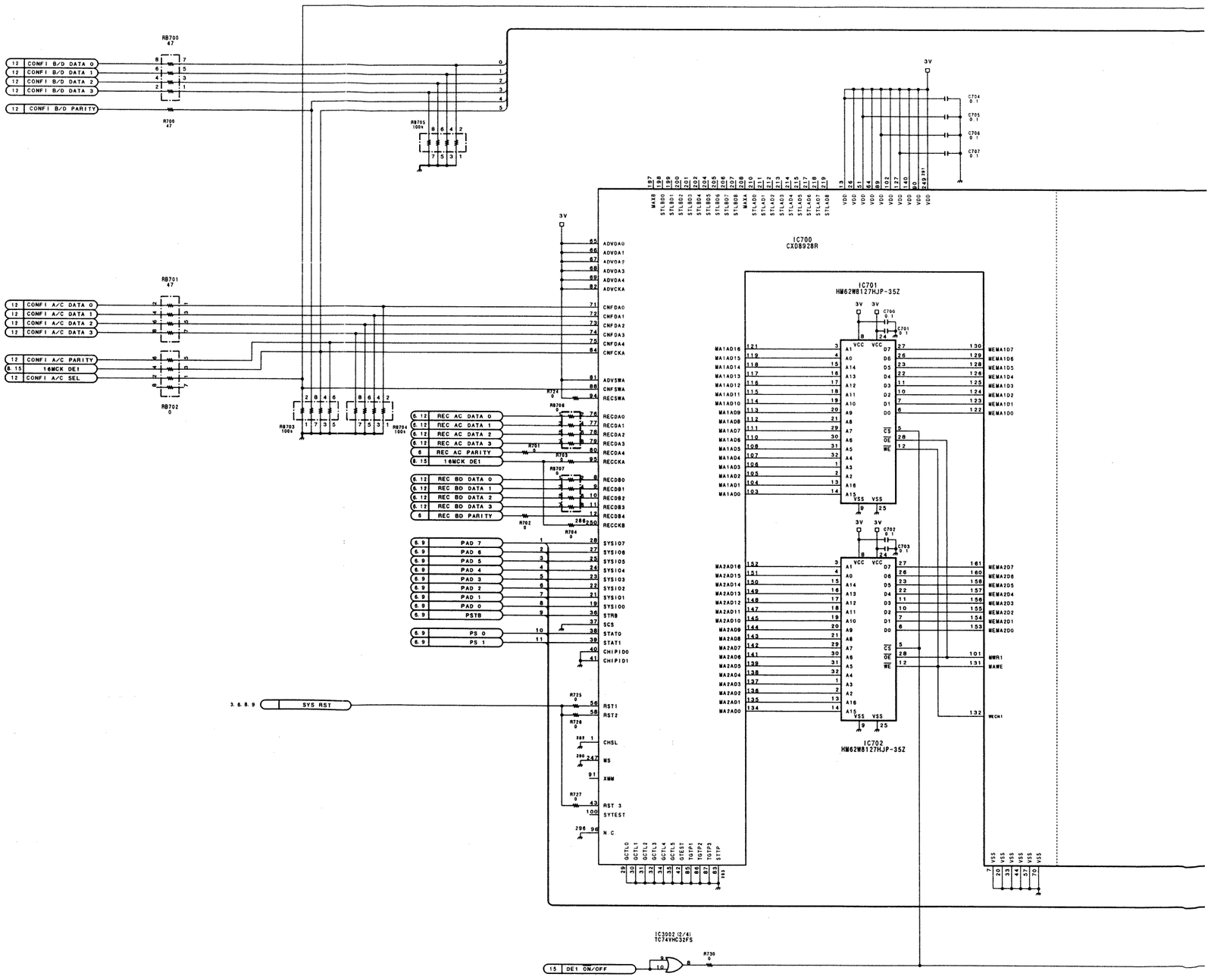

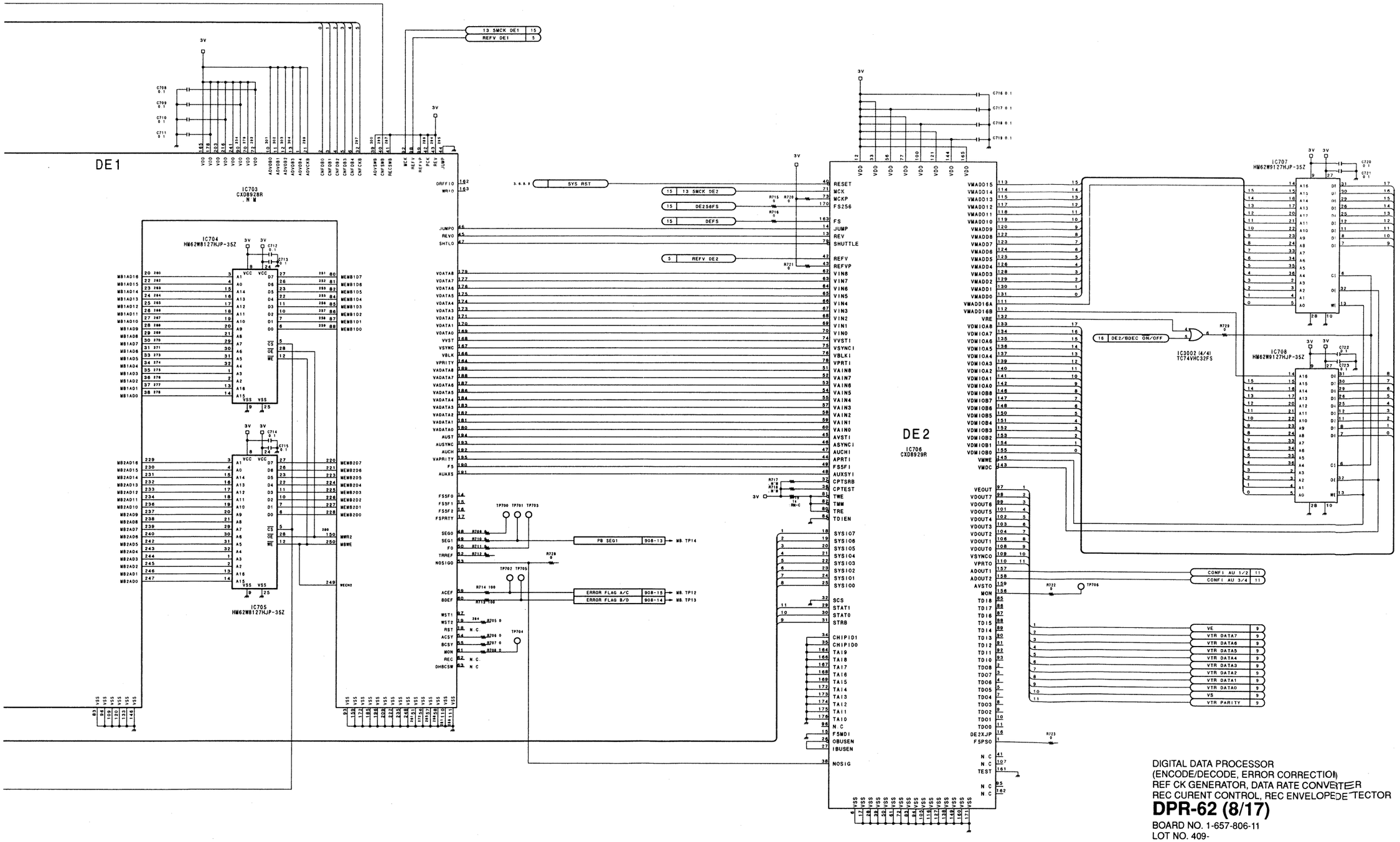

DIGITAL DATA PROCESSOR
(ENCODE/DECODE, ERROR CORRECTION)
REF CK GENERATOR, DATA RATE CONVERTER
REC CURENT CONTROL, REC ENVELOPE DETECTOR

DPR-62 (8/17)

BOARD NO. 1-657-806-11
LOT NO. 409-
B-¥DVW250-DPR62-12-S/M

DVW-250 (J)
DVW-250 (UC)
DVW-250P (SY)

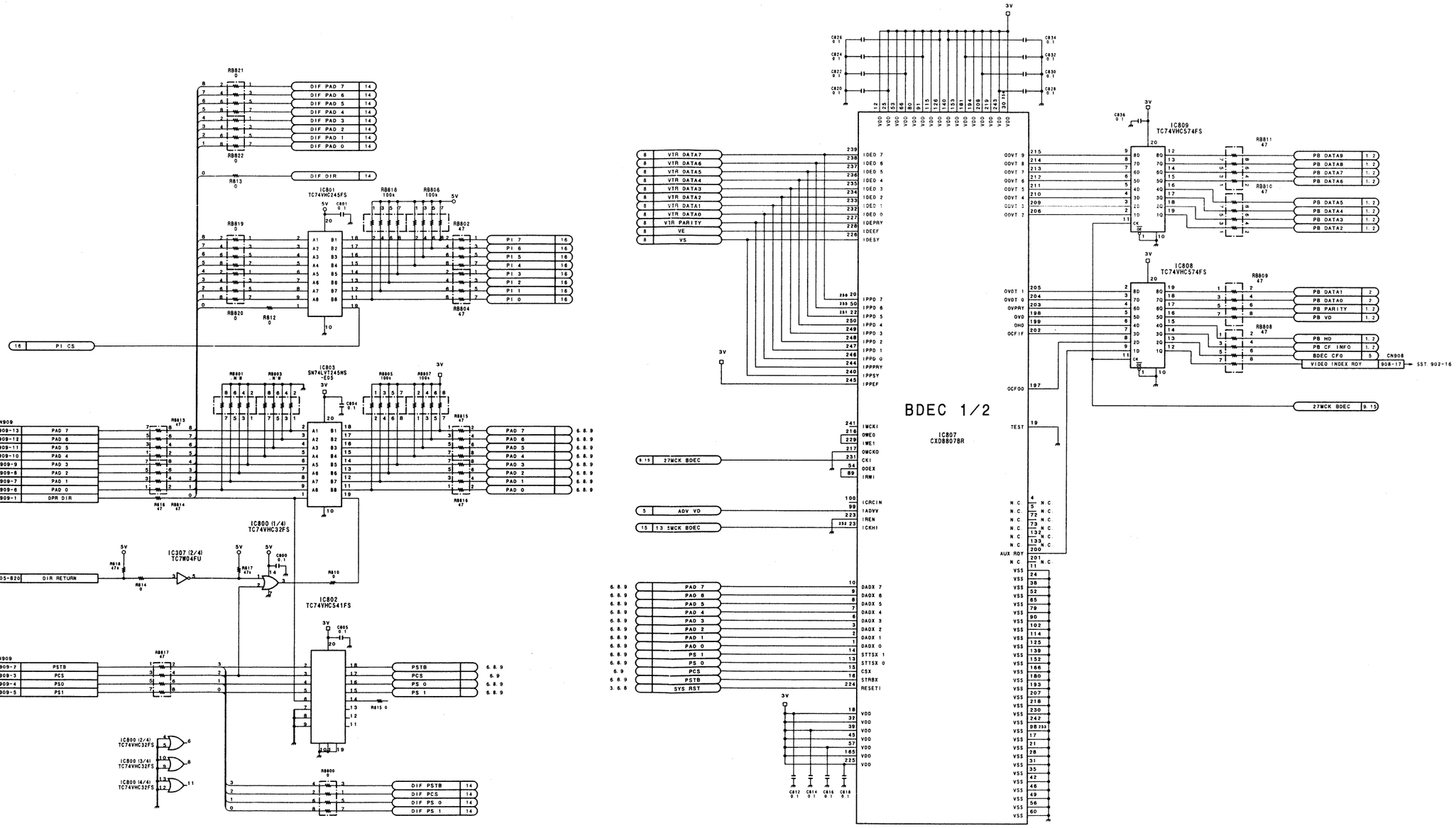

DPR-62 (9/17)

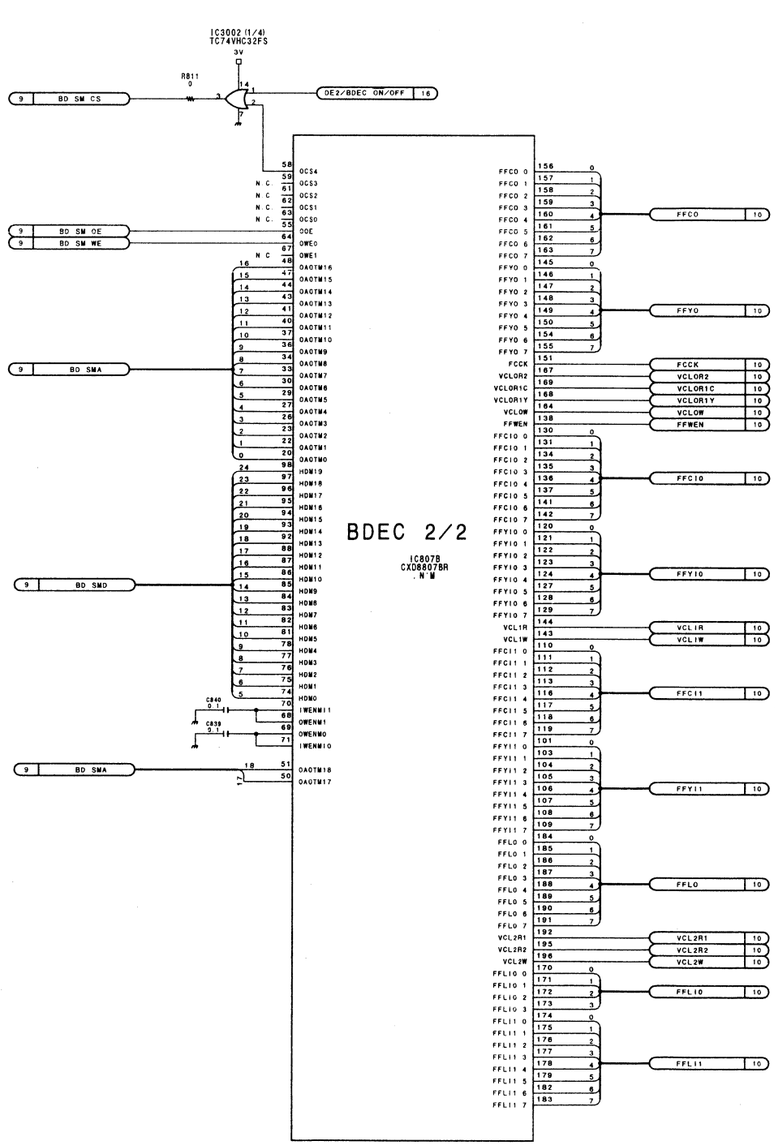

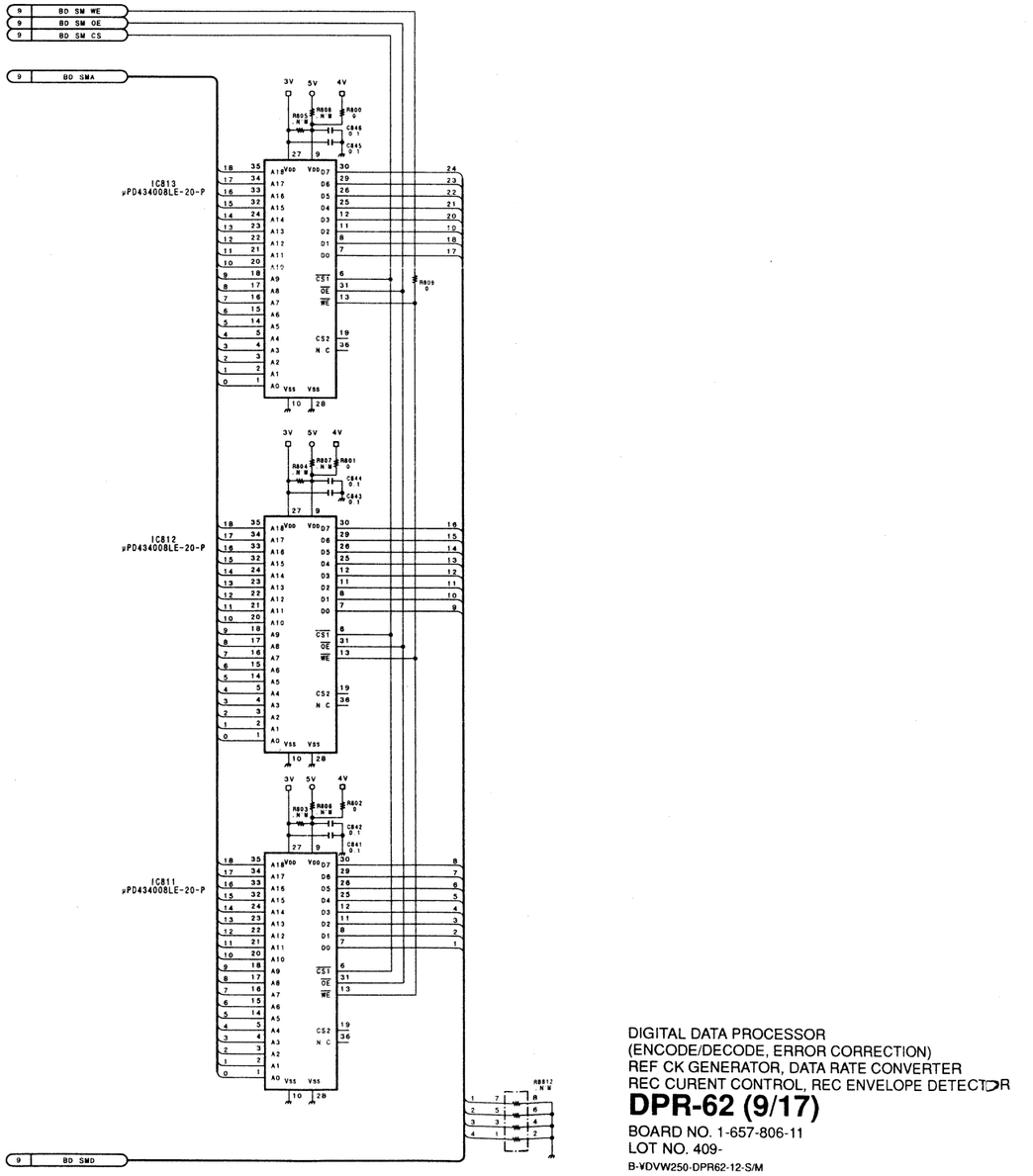

DIGITAL DATA PROCESSOR
(ENCODE/DECODE, ERROR CORRECTION)
REF CK GENERATOR, DATA RATE CONVERTER
REC CURENT CONTROL, REC ENVELOPE DETECTOR

DPR-62 (9/17)

BOARD NO. 1-657-806-11
LOT NO. 409-

B-VDVW250-DPR62-12-S/M

DVW-250 (J)
DVW-250 (UC)
DVW-250P (SY)

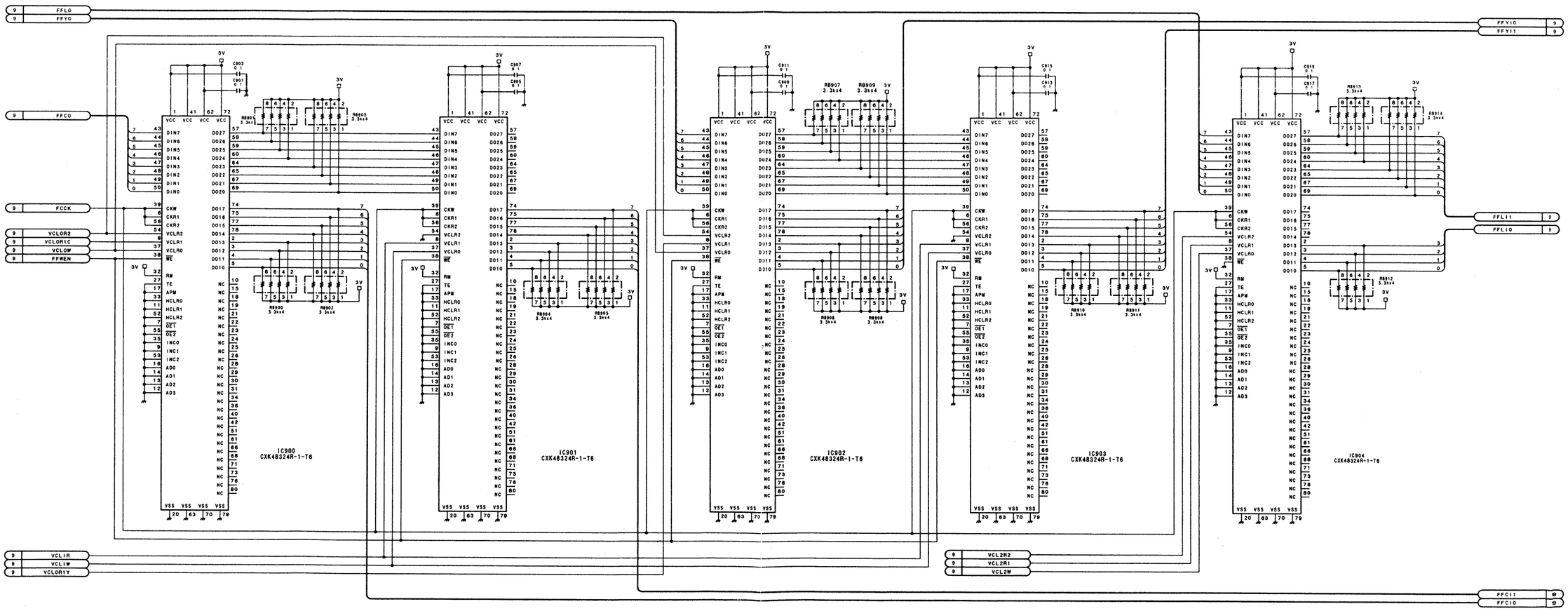

DIGITAL DATA PROCESSOR
(ENCODE/DECODE, ERROR CORRECTION)
REF CK GENERATOR, DATA RATE CONVERTER
REC CURENT CONTROL, REC ENVELOPE DETECTOR

DPR-62 (10/17)

BOARD NO. 1-657-806-11
LOT NO. 409-

B-VDVW250-DPR62-12-S/M

DVW-250 (J)
DVW-250 (UC)
DVW-250P (SY)

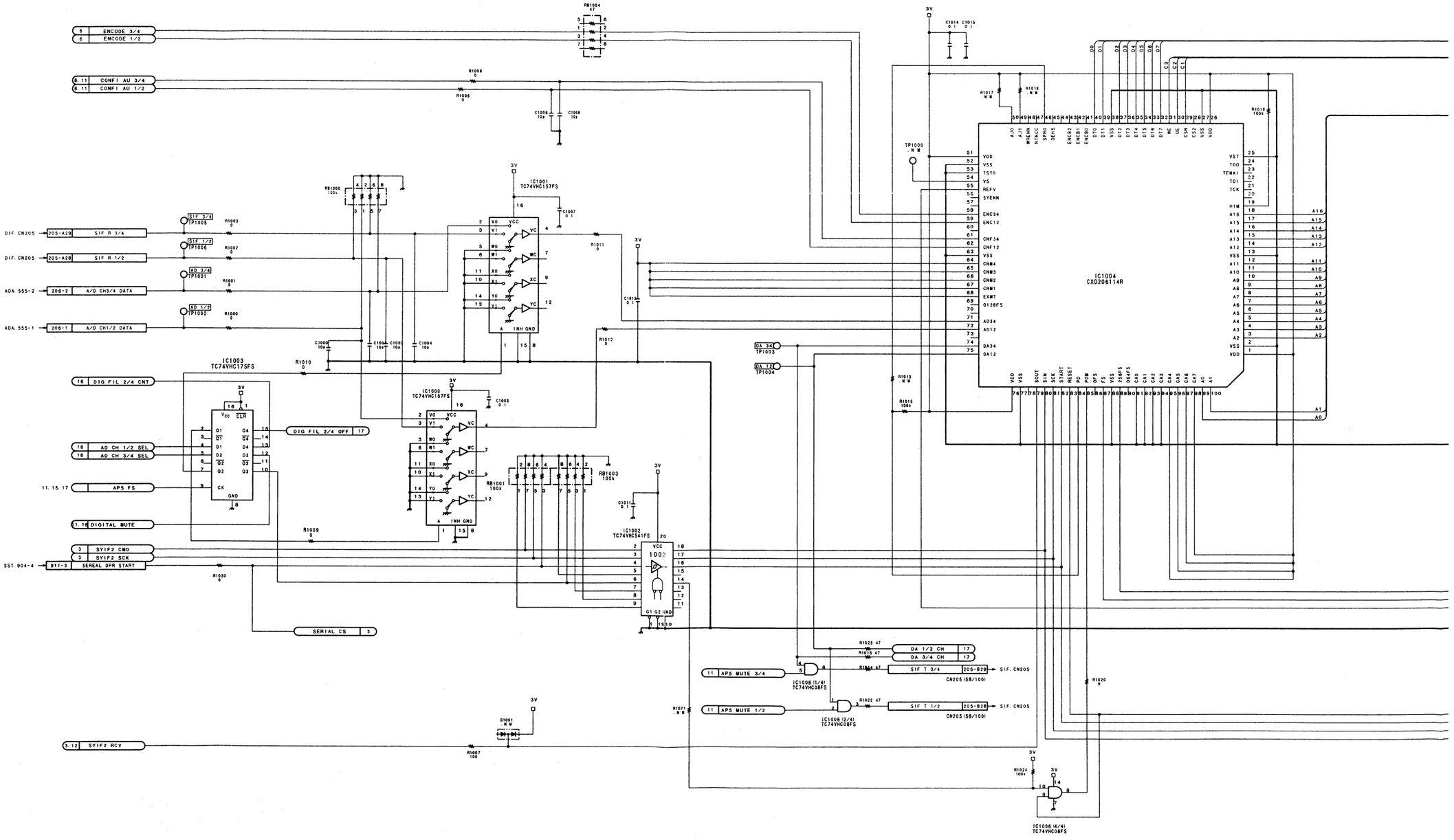

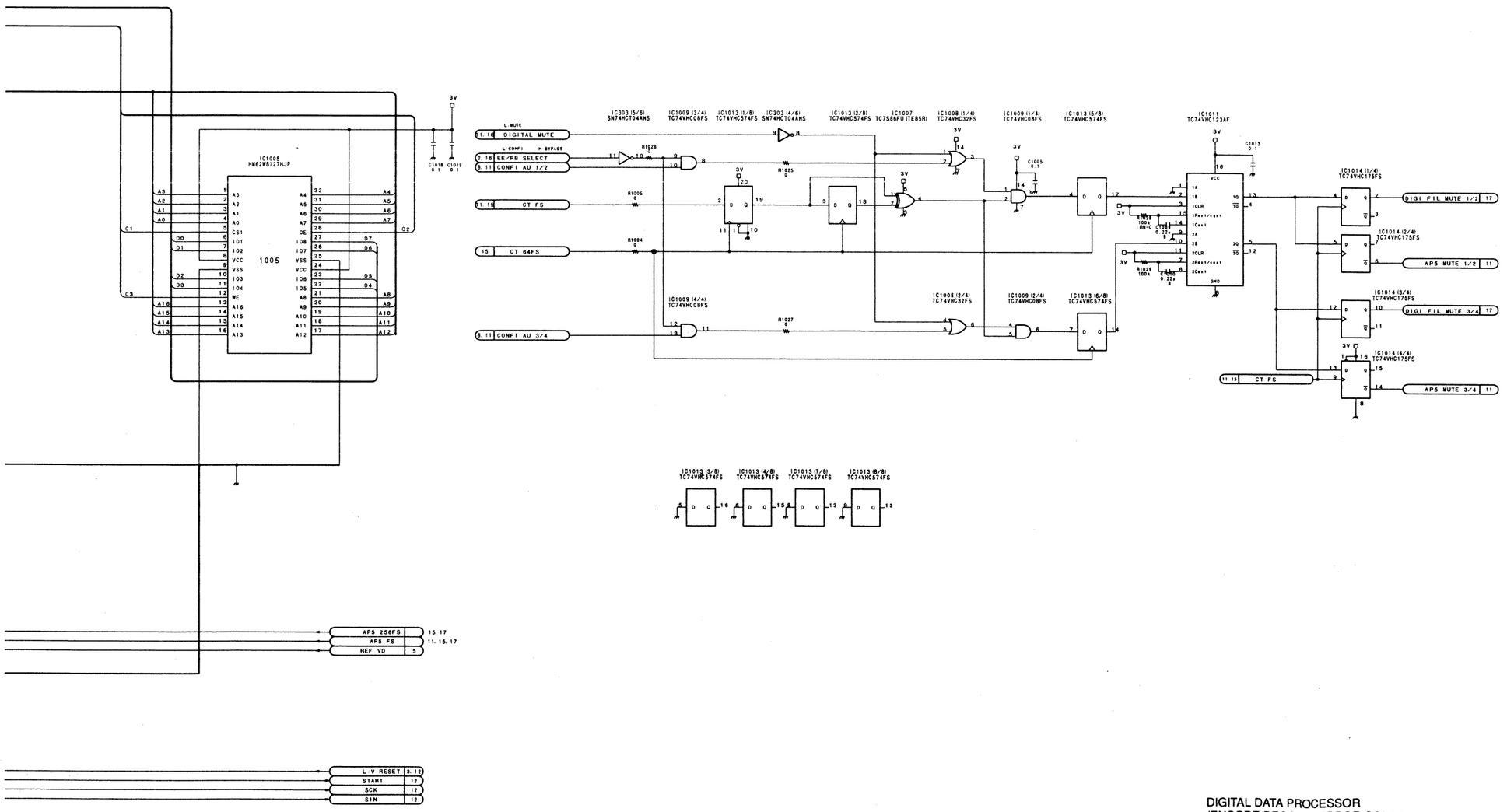

DIGITAL DATA PROCESSOR
(ENCODE/DECODE, ERROR CORRECTION)
REF CK GENERATOR, DATA RATE CONVERTER
REC CURENT CONTROL, REC ENVELOPE DETECTOR

DPR-62 (11/17)

BOARD NO. 1-657-806-11
LOT NO. 409-
B-¥DVW250-DPR62-12-S/M

DVW-250 (J)
DVW-250 (UC)
DVW-250P (SY)

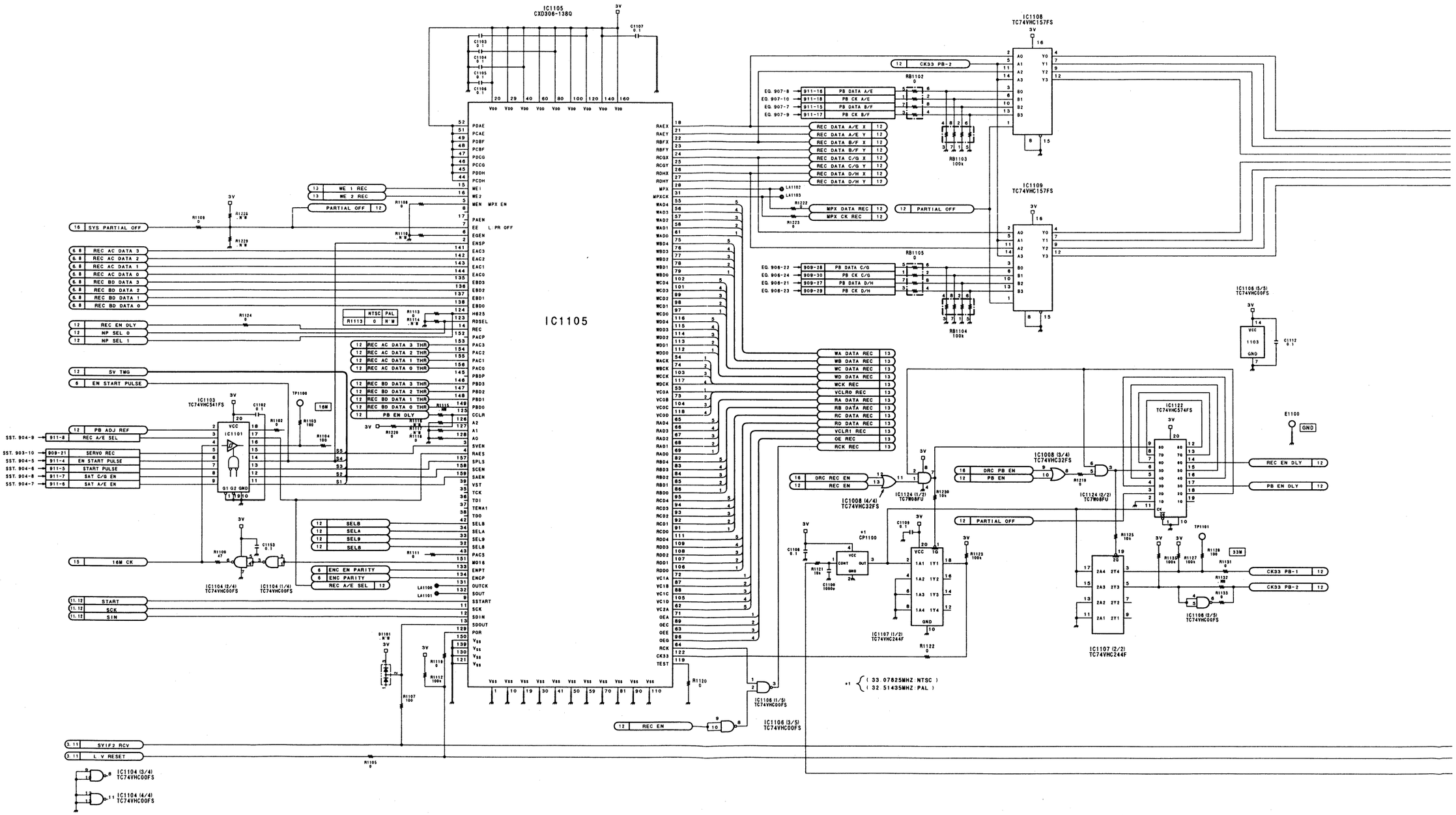

DPR-62 (12/17)

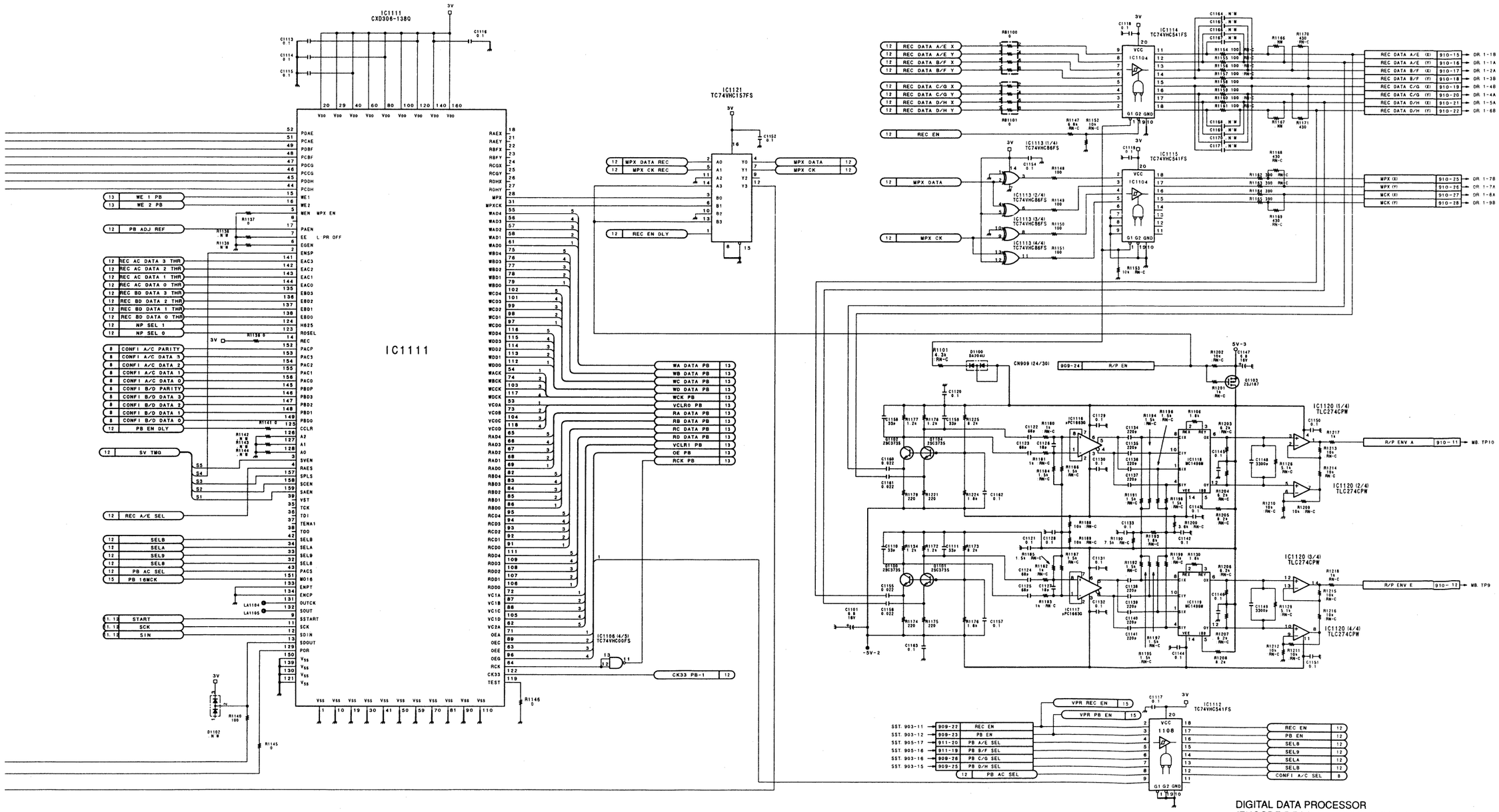

DIGITAL DATA PROCESSOR
(ENCODE/DECODE, ERROR CORRECTION)
REF CK GENERATOR, DATA RATE CONVERTER
REC CURENT CONTROL, REC ENVELOPE DETECTOR

DPR-62 (12/17)

BOARD NO. 1-657-806-11
LOT NO. 409-

B-VDVW250-DPR62-12-S/M

DVW-250 (J)
DVW-250 (UC)
DVW-250P (SY)

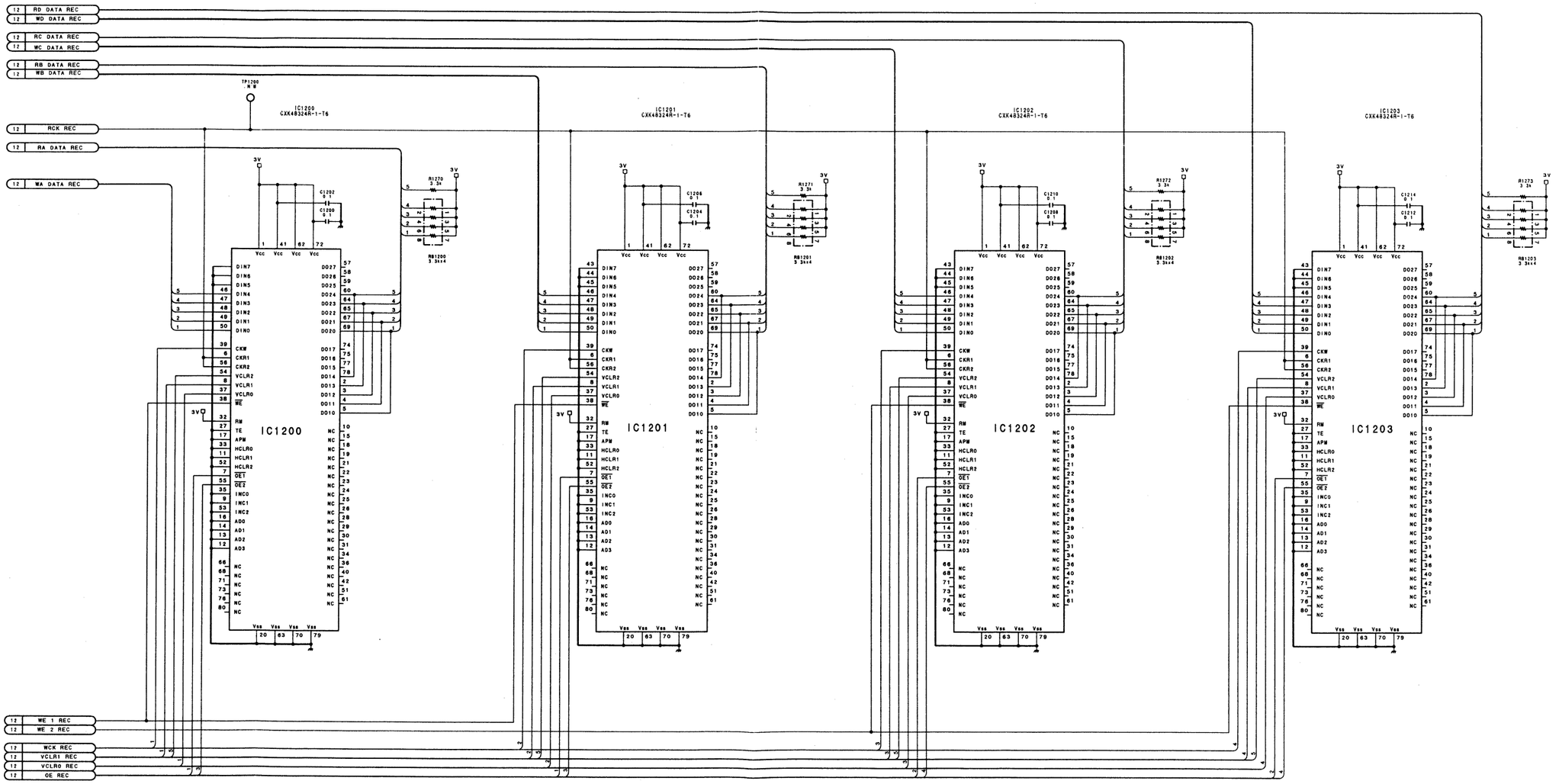

DPR-62 (13/17)

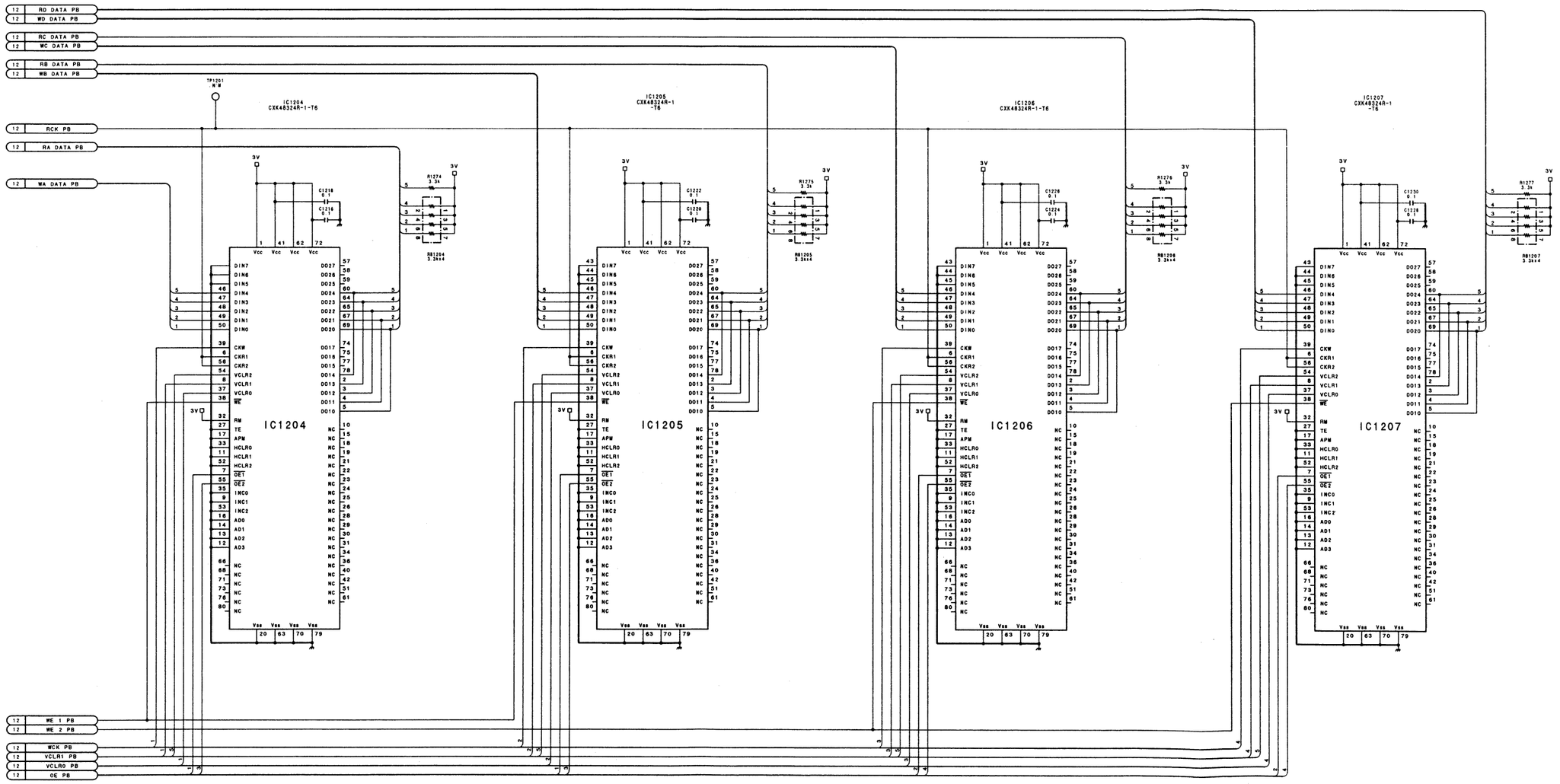

DIGITAL DATA PROCESSOR
(ENCODE/DECODE, ERROR CORRECTION)
REF CK GENERATOR, DATA RATE CONVERTER
REC CURENT CONTROL, REC ENVELOPE DETECTOR

DPR-62 (13/17)

BOARD NO. 1-657-806-11
LOT NO. 409-

B-¥DVW250-DPR62-12-S/M

I | J | K | L | M | N | O | P

DVW-250 (J)
DVW-250 (UC)
DVW-250P (SY)

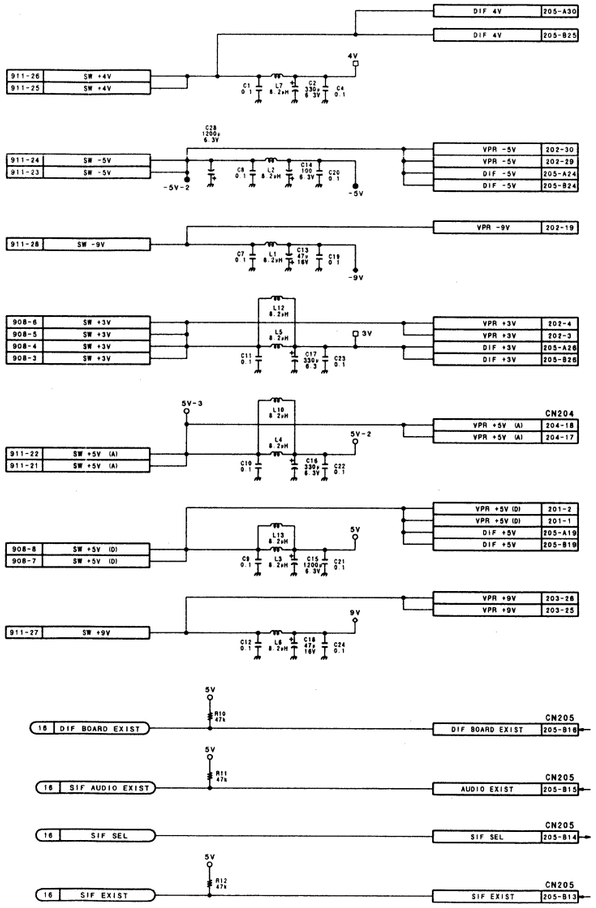

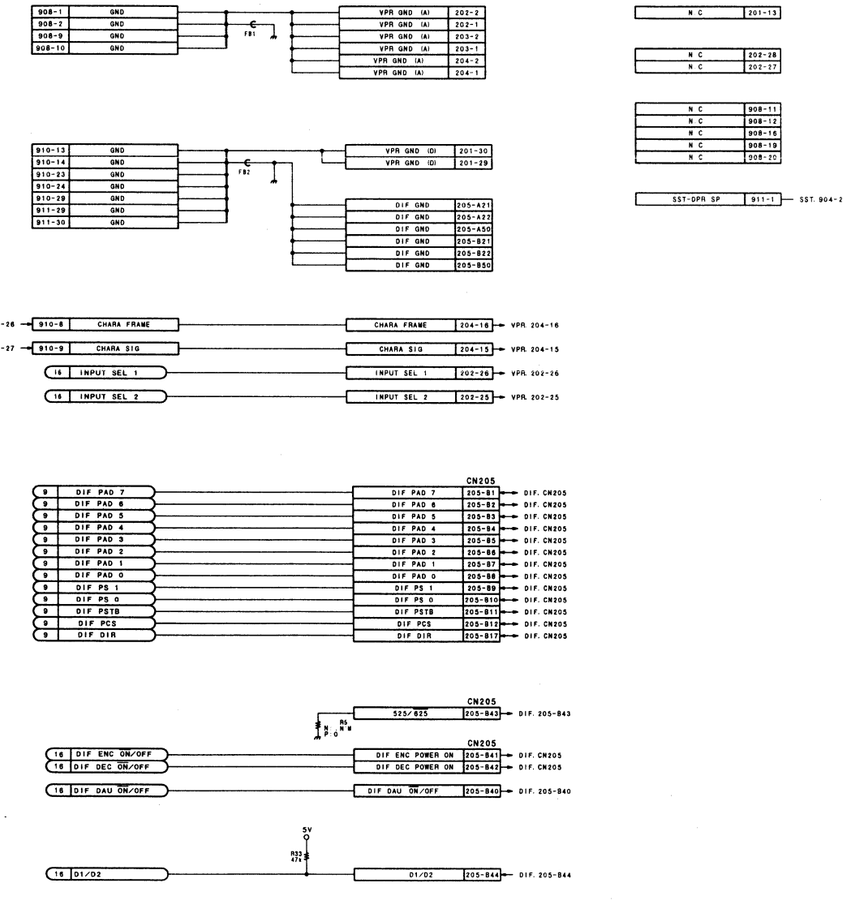

DIGITAL DATA PROCESSOR
(ENCODE/DECODE, ERROR CORRECTION)
REF CK GENERATOR, DATA RATE CONVERTER
REC CURENT CONTROL, REC ENVELOPE DETECTOR

DPR-62 (14/17)

BOARD NO. 1-657-806-11
LOT NO. 409-
B-¥DVW250-DPR62-12-S/M

DVW-250 (J)
DVW-250 (UC)
DVW-250P (SY)

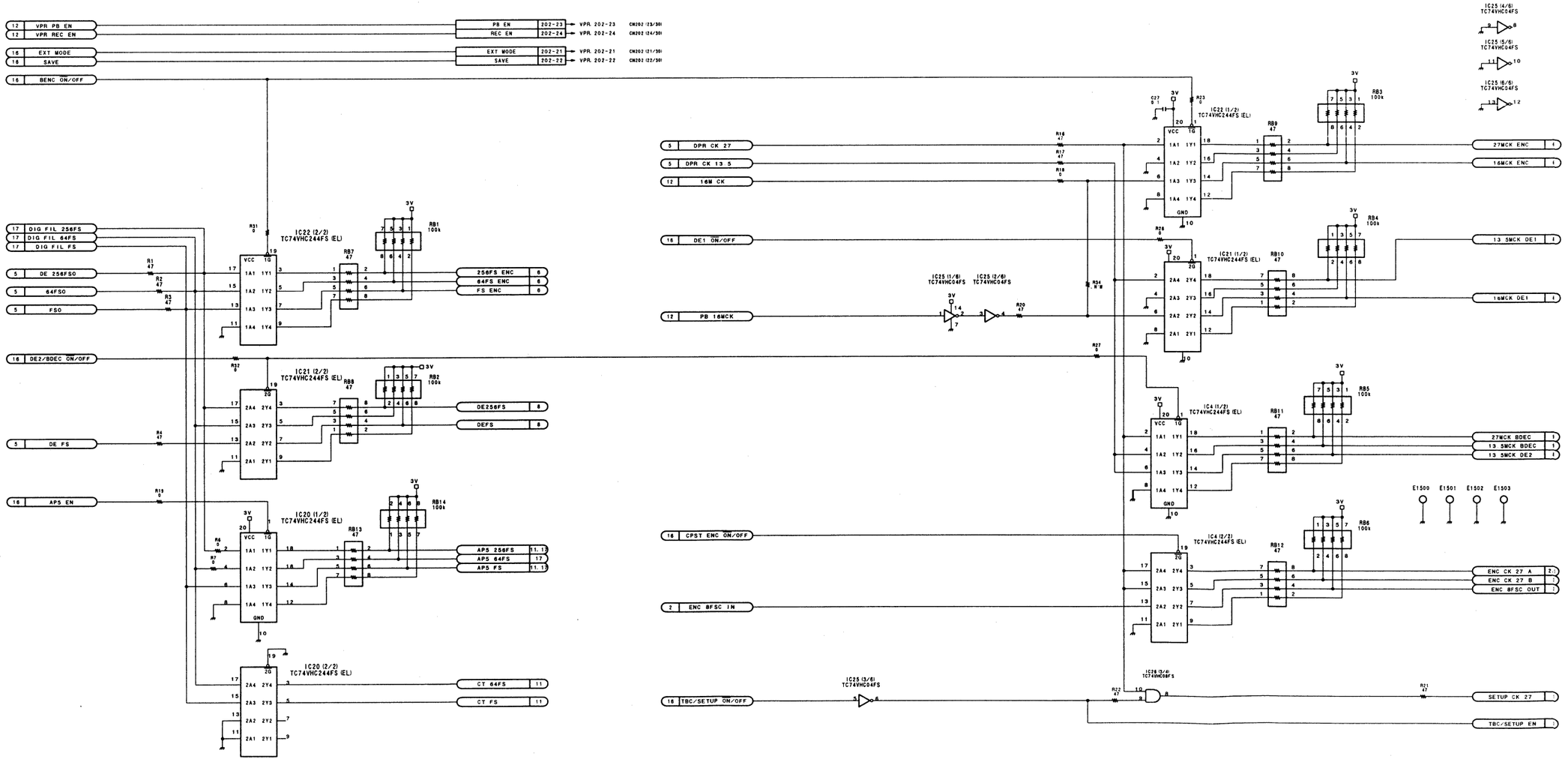

DIGITAL DATA PROCESSOR
(ENCODE/DECODE, ERROR CORRECTION)
REF CK GENERATOR, DATA RATE CONVERTER
REC CURENT CONTROL, REC ENVELOPE DETECTOR

DPR-62 (15/17)

BOARD NO. 1-657-806-11
LOT NO. 409-
B-¥DVW250-DPR62-12-S/M

DPR-62 (16/17)

DVW-250 (J)
DVW-250 (UC)
DVW-250P (SY)

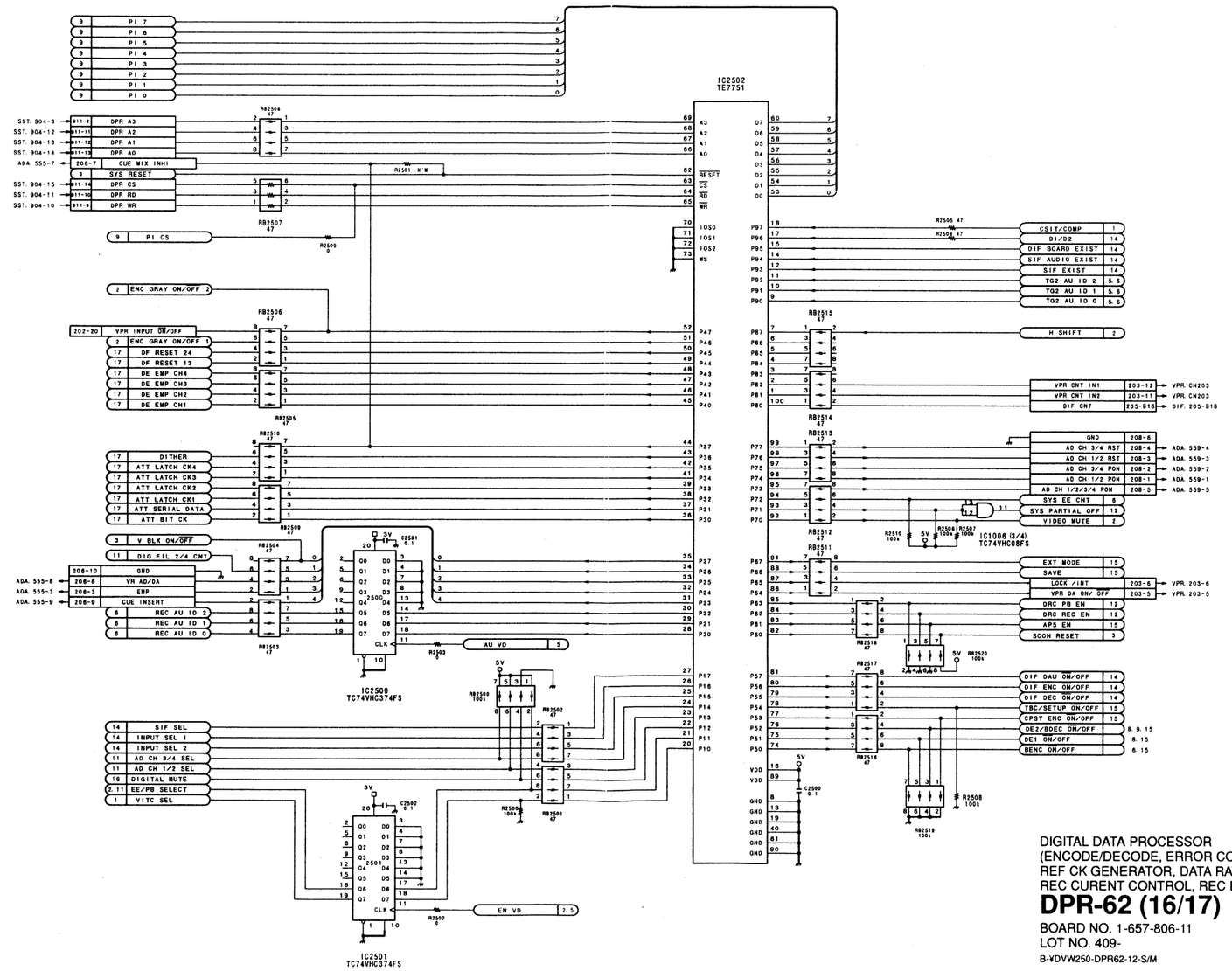

DIGITAL DATA PROCESSOR
(ENCODE/DECODE, ERROR CORRECTION)
REF CK GENERATOR, DATA RATE CONVERTER
REC CURENT CONTROL, REC ENVELOPE DETECTOR

DPR-62 (16/17)

BOARD NO. 1-657-806-11
LOT NO. 409-
B-VDVW250-DPR62-12-S/M

3-66

DVW-250 (J)
DVW-250 (UC)
DVW-250P (SY)

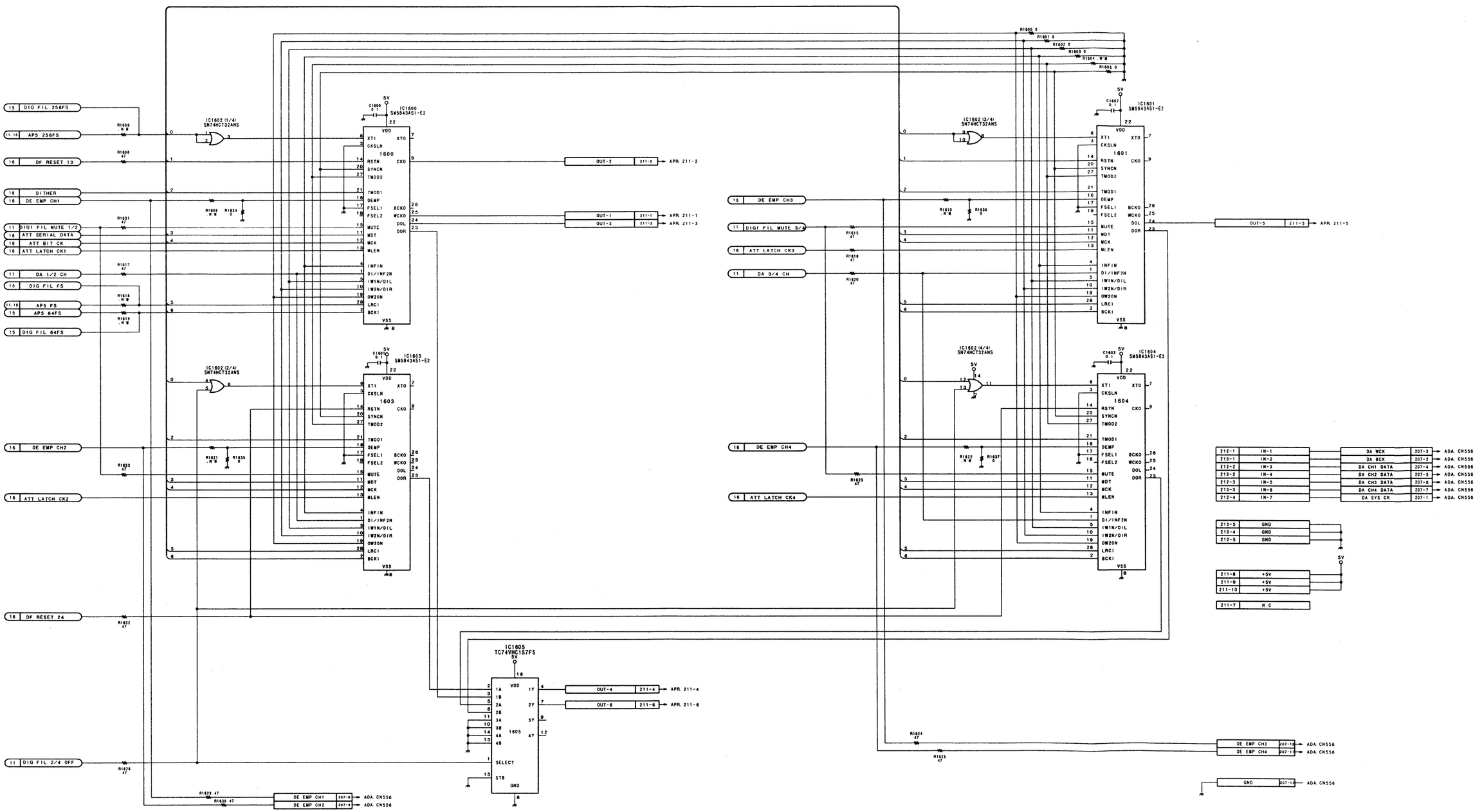

DIGITAL DATA PROCESSOR
(ENCODE/DECODE, ERROR CORRECTION
REF CK GENERATOR, DATA RATE CONVERTER
REC CURENT CONTROL, REC ENVELOPE DETECTOR

DPR-62 (17/17)

BOARD NO. 1-657-806-11
LOT NO. 409-
B-¥DVW250-DPR62-12-S/M

DVW-250 (J)
DVW-250 (UC)
DVW-250P (SY)

APR-20 (1-658-297-11)

CN211	*B2
CN212	*A6
CN213	*A6
IC1	C2
IC2	C3
IC3	A2
IC4	B2
IC5	C4
IC6	A3
IC7	B3
IC8	B4
IC9	C5
IC10	A5
IC11	B5
IC12	A4
IC13	B6
IC14	A6

* : Soldering Side

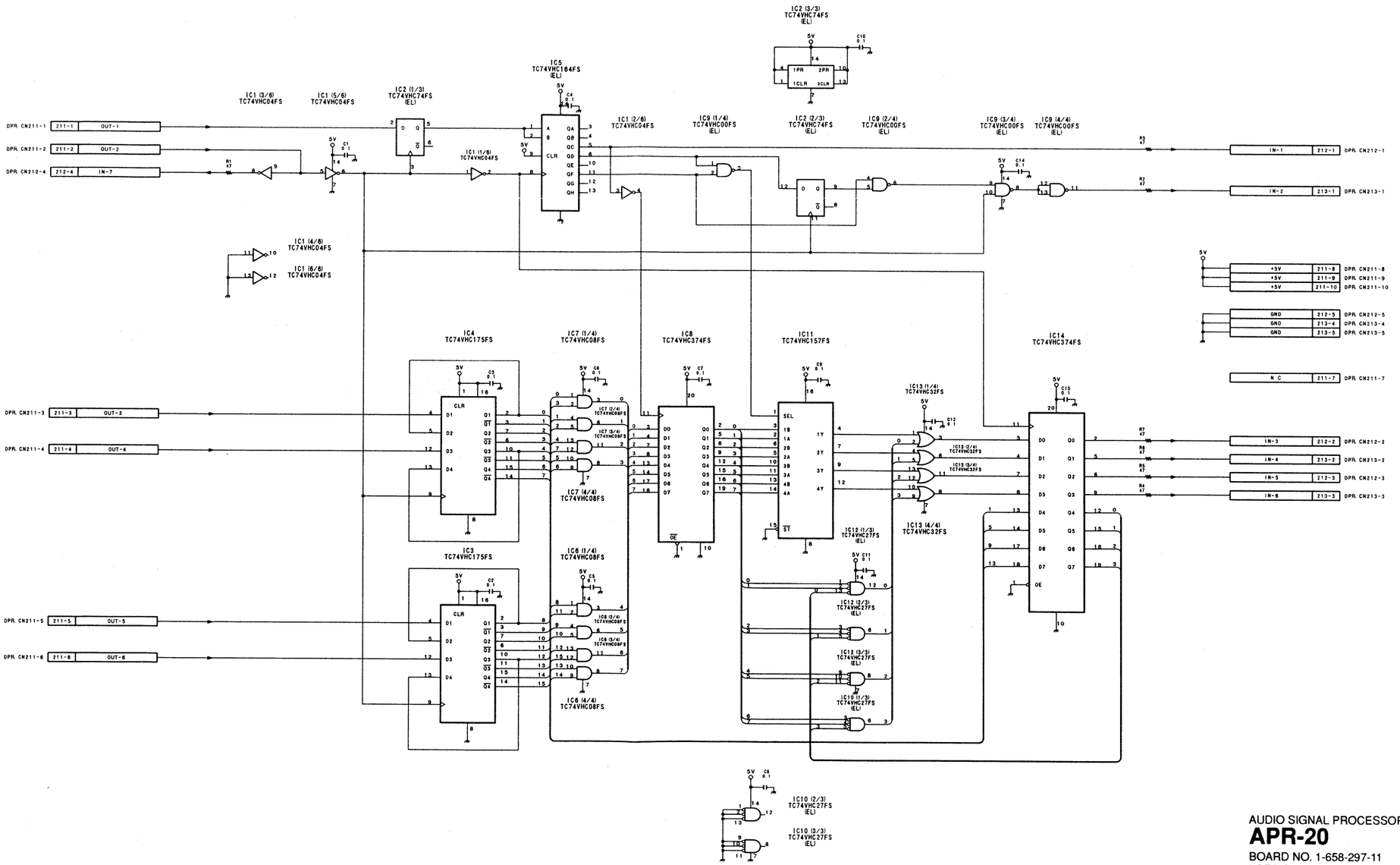

AUDIO SIGNAL PROCESSOR (LIMITTER)
APR-20
BOARD NO. 1-658-297-11
LOT NO. 409-
B-¥DVW250-APR20-11

DVW-250 (J)
DVW-250 (UC)
DVW-250P (SY)

EQ-54 (1-657-799-11)

CN301	A1	L100	*A2	RB304	D4
CN302	E1	L101	*A2	RB400	E3
CN303	D1	L102	*A3	RB401	F3
CN304	G1	L200	*C2	RB402	E3
CN906	F4	L201	*B2	RB403	F4
CN907	B4	L202	*C3	RB404	E4
		L300	*D2	RB530	C4
CT800	G2	L301	*D2		
		L302	*D3	RV100	*A2
CV100	*A2	L400	*E2	RV101	*A1
CV200	*B2	L401	*E2	RV103	*B3
CV300	*D2	L402	*F3	RV104	*A3
CV400	*E2	L800	G4	RV200	*B2
CV800	G2	L801	E4	RV201	*B1
		L802	G2	RV203	*B3
D100	*B3	L900	D4	RV204	*C3
D101	B3	L901	C4	RV300	*D2
D102	*A3	L902	A4	RV301	*D1
D200	*B3			RV303	*D3
D201	B3	Q100	*B2	RV304	*C3
D202	*C3	Q101	*A2	RV400	*E2
D300	*E3	Q110	B2	RV401	*E1
D301	D3	Q200	*C2	RV403	*E3
D302	*C3	Q201	*B3	RV404	*E3
D400	*E3	Q210	C2	RV800	*G2
D401	E3	Q300	*E2	RV801	*G1
D402	*E3	Q301	*D2	RV802	*G1
D530	*B2	Q310	D2	RV803	*G1
D630	*E2	Q400	*F2		
D800	*G1	Q401	*E3	S700	C1
D801	G1	Q410	F2		
		Q500	B1	TP100	*B1
E100	D3	Q501	B1	TP102	*B2
E200	*D4	Q502	*B1	TP103	*B2
E300	A3	Q503	*B1	TP104	*A3
E400	*D4	Q504	*C2	TP105	*A3
E800	*F3	Q505	*C2	TP200	*C1
		Q506	C2	TP202	*C2
IC100	*B2	Q507	A2	TP203	*C2
IC101	A2	Q508	*B4	TP204	*C3
IC102	B3	Q600	D1	TP205	*C3
IC103	B3	Q601	D1	TP300	*D1
IC104	*B4	Q602	*D1	TP302	*D2
IC105	A3	Q603	*D1	TP303	*D2
IC106	*A4	Q604	*F2	TP304	*D3
IC200	*C2	Q605	*F2	TP305	*D3
IC201	C2	Q606	F2	TP400	*F1
IC203	B3	Q607	D2	TP402	*F2
IC205	C3	Q608	*D4	TP403	*F2
IC206	*C4	Q700	*F1	TP404	*F3
IC300	*D2	Q701	*F1	TP405	*E3
IC301	D2	Q702	*F1	TP800	*F3
IC302	E3	Q703	F1	TP801	*G1
IC303	D3	Q704	E1	TP802	*F3
IC304	*E4	Q800	G3	TP803	*G2
IC305	D3	Q801	G3	TP804	*G1
IC306	*D4	Q802	G2	TP805	*G1
IC400	*F2	Q803	G2	TP806	*G2
IC401	E2	Q804	*G2		
IC403	E3	Q805	G2	* : Soldering Side	
IC405	F3	Q806	G3		
IC406	*F4	Q807	*G2		
IC500	B4	Q808	*G2		
IC501	B2	Q809	G2		
IC600	E4	Q810	G2		
IC601	D2	Q811	G1		
IC700	G4	Q812	G1		
IC701	G4				
IC702	G4	RB100	A3		
IC705	G4	RB102	A3		
IC706	G3	RB103	A4		
IC708	G3	RB104	A4		
IC800	G1	RB200	C3		
IC801	G2	RB201	C3		
IC802	G1	RB202	C3		
IC803	*G2	RB203	C4		
IC804	F3	RB204	C4		
IC805	F2	RB300	D3		
IC806	*F2	RB301	D3		
		RB302	C3		
LV800	G2	RB303	D4		

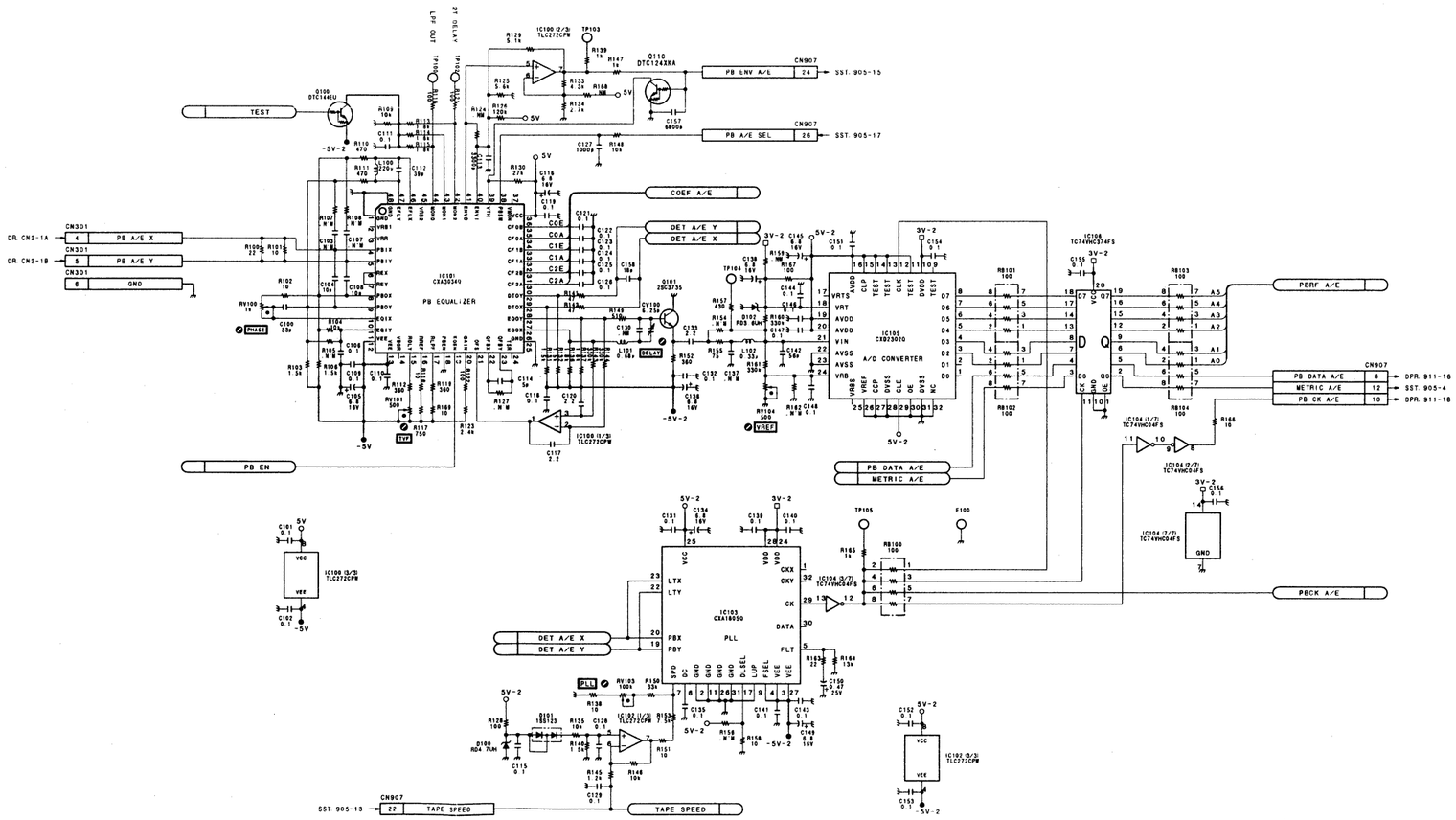

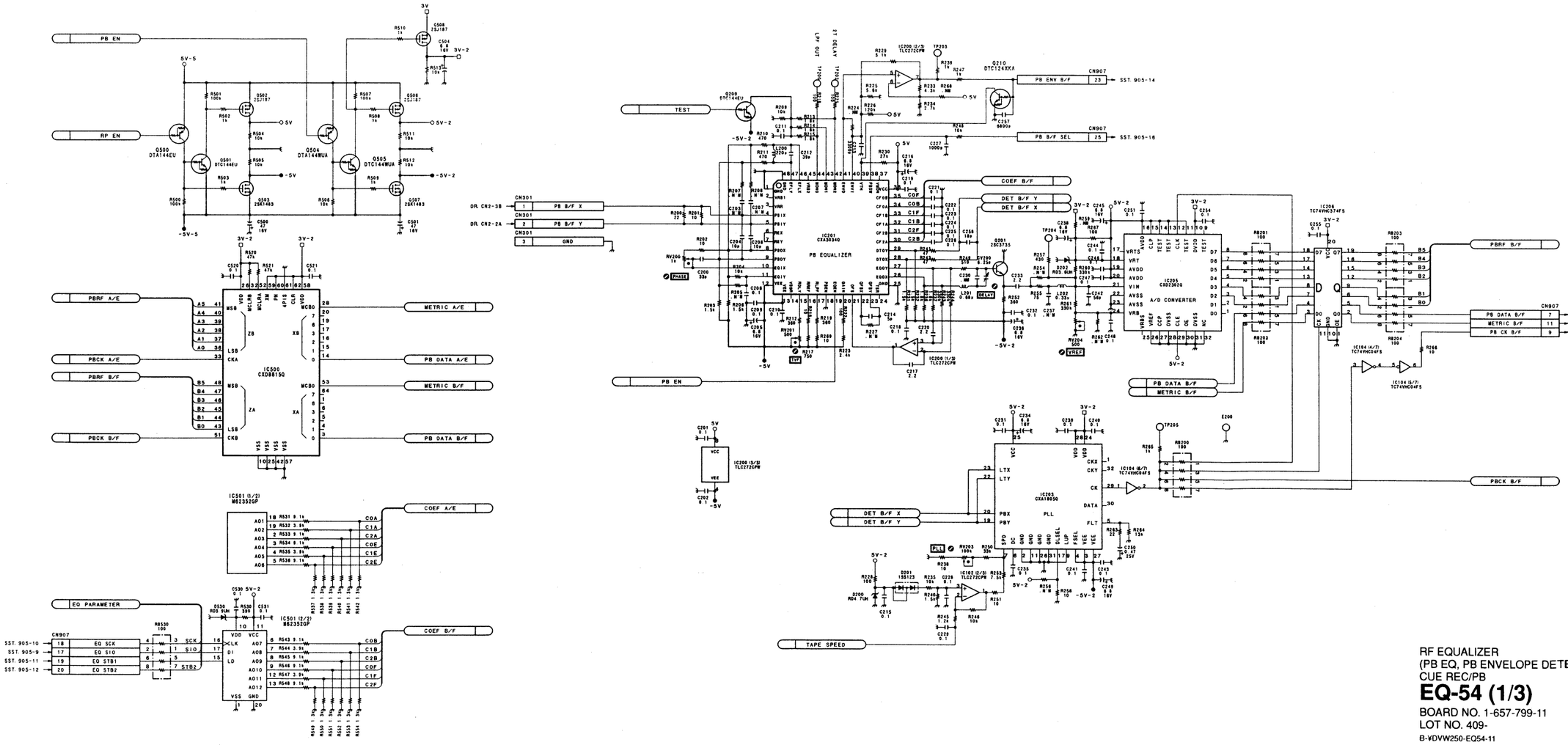

RF EQUALIZER
(PB EQ, PB ENVELOPE DETECTOR)
CUE REC/PB

EQ-54 (1/3)

BOARD NO. 1-657-799-11
LOT NO. 409-
B-¥DVW250-EQ54-11

DVW-250 (J)
DVW-250 (UC)
DVW-250P (SY)

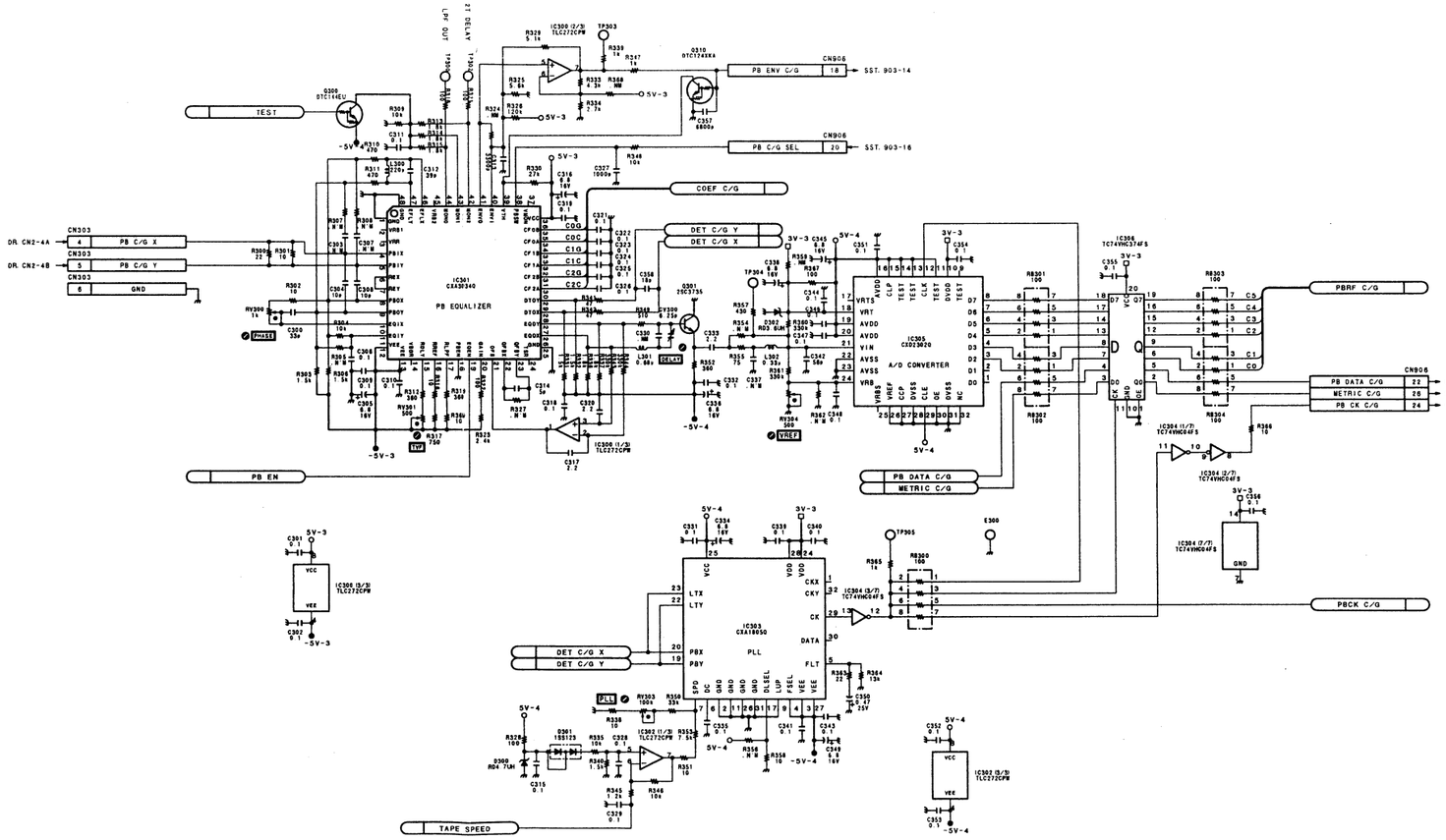

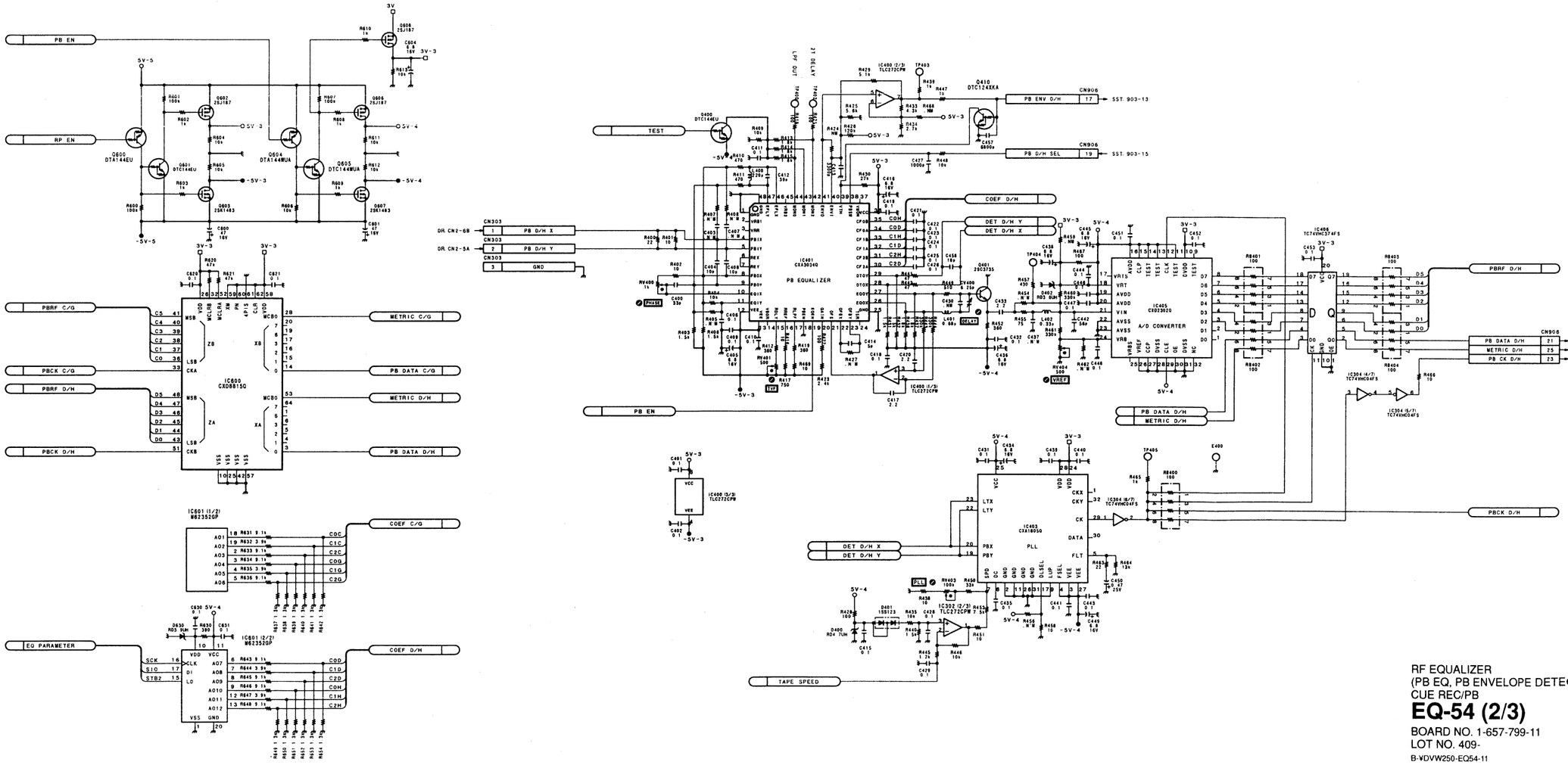

RF EQUALIZER
(PB EQ, PB ENVELOPE DETECTOR)
CUE REC/PB

EQ-54 (2/3)

BOARD NO. 1-657-799-11
LOT NO. 409-
B-¥DVW250-EQ54-11

DVW-250 (J)
DVW-250 (UC)
DVW-250P (SY)

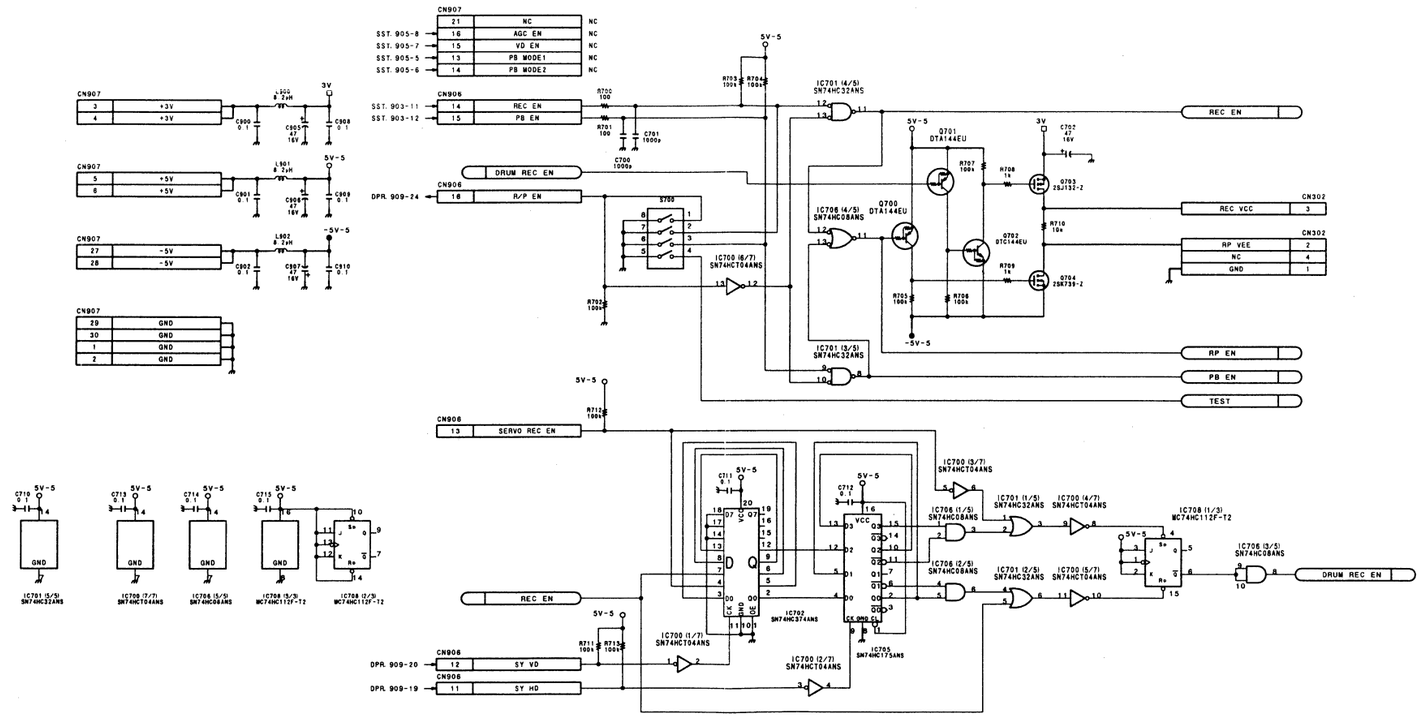

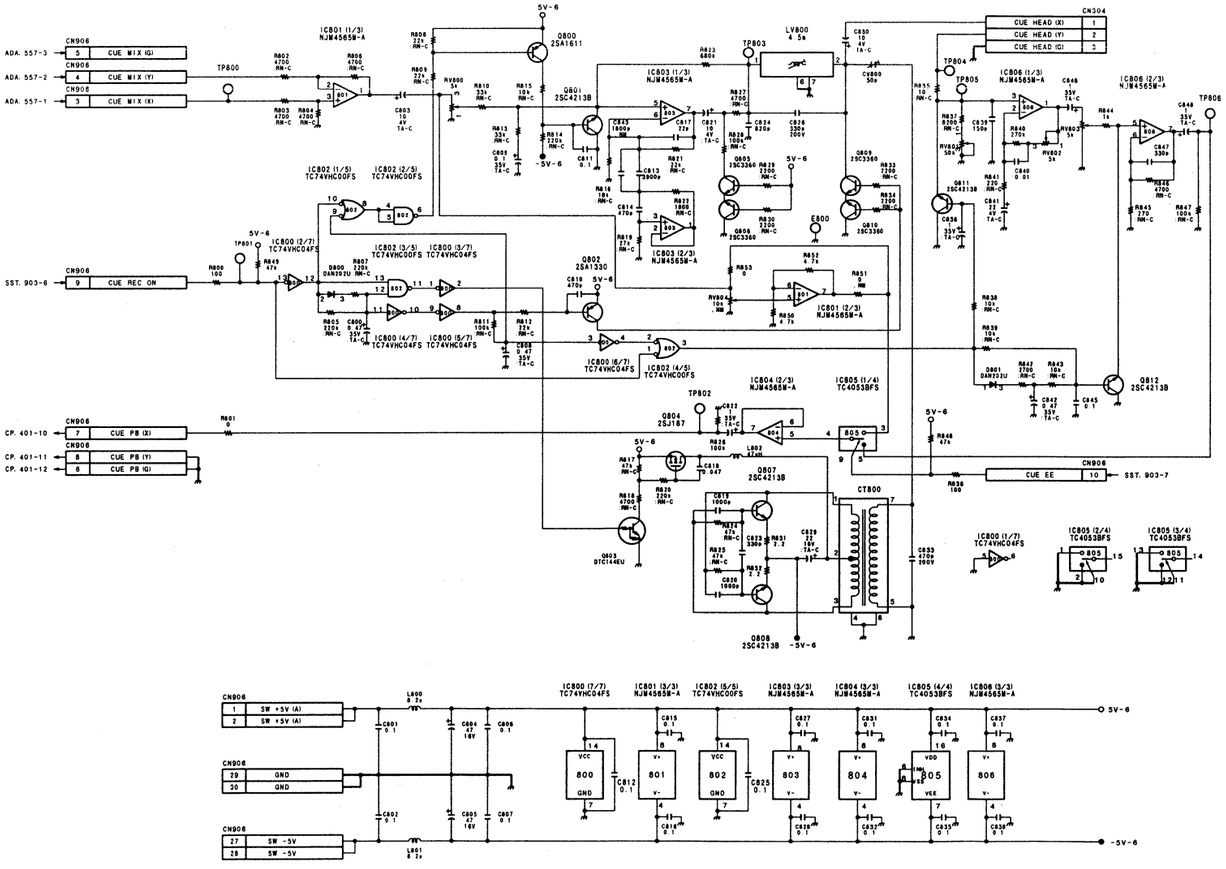

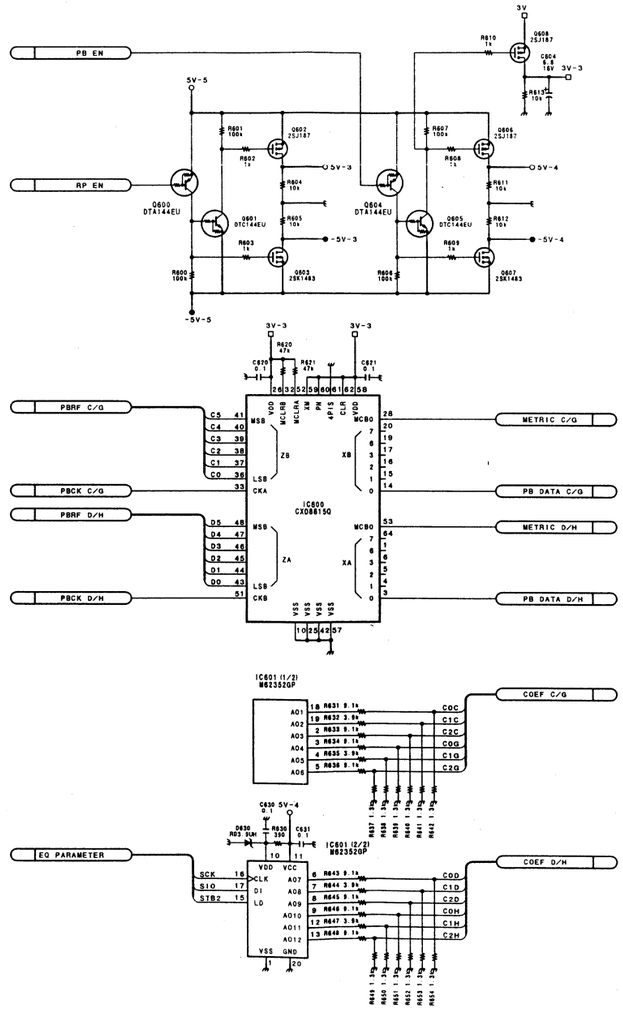

RF EQUALIZER
(PB EQ, PB ENVELOPE DETECTOR)
CUE REC/PB

EQ-54 (3/3)

BOARD NO. 1-657-799-11
LOT NO. 409-
B-¥DVW250-EQ54-11

DVW-250 (J)
DVW-250 (UC)
DVW-250P (SY)

SST-3 (1-657-804-11)

BT111	*E1	E2	E2	IC409	D9	Q619	J6	TP1	B5
		E3	H2	IC410	D10	Q620	B7	TP2	D4
CNI24	C2	E4	B5	IC411	E6	Q621	B7	TP3	D4
CNI413	E8	E5	F5	IC412	F6	Q622	H7	TP4	C6
		E6	H5	IC413	E8	Q623	H6	TP5	B8
CN1	B5	E7	B6	IC414	*E7	Q624	B7	TP6	B8
CN101	J3	E8	G6	IC501	A10	Q625	B7	TP7	B2
CN102	*G10	E801	J10	IC502	B9	Q626	*H6	TP111	E4
CN103	A3	E901	A9	IC504	C9	Q627	*H7	TP112	D4
CN104	A2			IC505	B10	Q628	*B7	TP113	D4
CN105	J8	FB1	*C7	IC506	H6	Q629	*B7	TP114	D3
CN106	J4	FB601	*A6	IC601	E9	Q801	J8	TP116	E3
CN107	*F10	FB602	G6	IC602	E10	Q802	J9	TP153	E1
CN108	J1	FB603	H10	IC603	E10	Q851	*J10	TP401	D8
CN109	J7			IC604	E9	Q852	*J10	TP501	B9
CN110	J8	IC1	*D3	IC605	E7	Q853	*J9	TP502	B9
CN111	A1	IC2	*D3	IC606	A6	Q854	J9	TP503	B9
CN112	J2	IC3	F4	IC607	G7	Q855	J9	TP504	B9
CN113	J3	IC4	G2	IC608	H7	Q856	H10	TP505	B10
CN114	*B10	IC5	H4	IC609	B8	Q901	*A10	TP506	F5
CN115	J1	IC6	*F3	IC610	B8	Q902	*A10	TP507	F5
CN501	D6	IC7	C1	IC611	J7	Q903	*A9	TP508	B10
CN901	J10	IC8	A5	IC612	B6	Q904	A9	TP601	H7
CN902	G10	IC9	*G4	IC801	J10	Q905	A9	TP602	A8
CN903	D10	IC10	C5	IC802	J9	Q941	*A7	TP801	J10
CN904	C10	IC11	A5	IC803	J10	Q942	A7	TP802	J8
CN905	A10	IC12	F3	IC851	J10	Q943	A7	TP851	J10
		IC13	*G3	IC852	H10	Q944	*A7	TP852	H9
CT941	A8	IC14	F3	IC853	H9	Q945	*A7	TP901	A10
CT961	H8	IC15	C4	IC901	A10	Q961	*H8	TP902	A8
		IC16	F4	IC902	A10	Q962	*H8	TP941	A8
CV111	D4	IC17	F3	IC903	A9	Q963	H7	TP942	A7
		IC18	D3	IC904	A8	Q964	*J8	TP961	H8
D1	A5	IC19	C3	IC941	A7	Q965	*J8	TP962	H8
D2	A5	IC20	G3	IC961	H8	Q966	H7		
D3	C7	IC21	C1					X1	B5
D4	C7	IC22	H3	LV961	G8	RB1	*C4	X2	D4
D5	*A1	IC23	H4			RB2	*C4	X111	D5
D6	C8	IC24	C2	L1	C8	RB3	A1	X112	E4
D7	C8	IC25	B3	L2	C8	RB4	J2	X113	D3
D111	E5	IC26	B2	L301	D1	RB101	D4	X401	D7
D112	E1	IC27	G4	L601	E7	RB102	D5		
D113	E4	IC28	C3	L602	F7	RB151	*A3		
D114	D1	IC29	B7	L603	G8	RB152	*B3		
D115	E3	IC30	B1	L604	B8	RB153	*B4		
D301	E1	IC31	B1	L941	A7	RB154	*A3		
D302	D1	IC32	A3	L961	J7	RB155	*A4		
D351	*J3	IC33	A4	L981	G9	RB156	*A3		
D352	*J3	IC112	E4	L982	G9	RB157	*A3		
D353	*H3	IC113	D5			RB158	*F1		
D354	*J3	IC114	D4	Q1	*C7	RB159	*E2		
D355	*J3	IC115	E5	Q2	*C7	RB160	*E2		
D356	*J3	IC116	F4	Q3	C7	RB161	*E1		
D357	*J3	IC117	E4	Q4	*A1	RB162	*E2		
D358	*J3	IC118	E3	Q5	*C8	RB163	*F2		
D401	C6	IC119	F4	Q6	*C8	RB301	*H2		
D402	C6	IC120	G5	Q7	*B7	RB302	*J2		
D403	D6	IC121	G4	Q8	*B9	RB303	*J1		
D404	C6	IC151	A4	Q9	*C8	RB304	*E5		
D405	B6	IC153	A3	Q151	*A3	RB305	*F4		
D406	B6	IC154	A4	Q152	*A3	RB401	D8		
D407	C6	IC155	A3	Q153	*A3	RB402	D5		
D408	B6	IC156	A3	Q401	*C6	RB403	D5		
D409	A6	IC158	E1	Q402	*C6	RB404	*D6		
D501	*A6	IC160	G3	Q403	D6	RB405	*E6		
D502	*J6	IC164	F5	Q404	C6	RB406	*D5		
D505	G5	IC165	E2	Q405	B6	RB501	G6		
D506	G5	IC167	D3	Q406	A6	RB502	G6		
D507	G5	IC301	G3	Q407	C6	RB503	D9		
D508	G5	IC302	D1	Q408	B6	RB504	D9		
D601	*A6	IC303	H1	Q409	A6	RB505	D10		
D602	F6	IC304	J2	Q501	*J3	RB506	D10		
D603	F6	IC306	F5	Q502	J5	RB508	J6		
D604	*F10	IC307	J3	Q503	*H9	RB509	J5		
D605	*J6	IC308	J1	Q601	*F9	RB510	J5		
D606	B6	IC309	G2	Q602	*A6	RB511	J5		
D607	F7	IC310	G1	Q603	*F7	RB512	*J5		
D608	A9	IC311	E5	Q604	F9	RB513	J6		
D609	*H6	IC312	E4	Q605	*F9	RB514	J6		
D610	*B7	IC351	A2	Q606	F9				
D611	*J6	IC352	A1	Q607	*E6	RV1	C7		
D612	B6	IC353	H3	Q608	F10	RV2	B7		
D613	H10	IC354	J4	Q609	*G10	RV401	A4		
D801	*J9	IC355	F2	Q610	*H6	RV402	*A6		
D802	*J9	IC401	D8	Q611	*B8				
D803	J9	IC402	D8	Q612	*G8	RY961	G8		
D804	*J9	IC403	D8	Q613	*B8				
D941	*A7	IC404	D6	Q614	*H6	S1	A5		
D961	*H8	IC405	E8	Q615	*B7	S151	F1		
D962	H8	IC406	D7	Q616	*H7	S501	G6		
		IC407	D7	Q617	*B7	S502	F6		
E1	B2	IC408	B6	Q618	J7	S503	F6		

*: Soldering Side

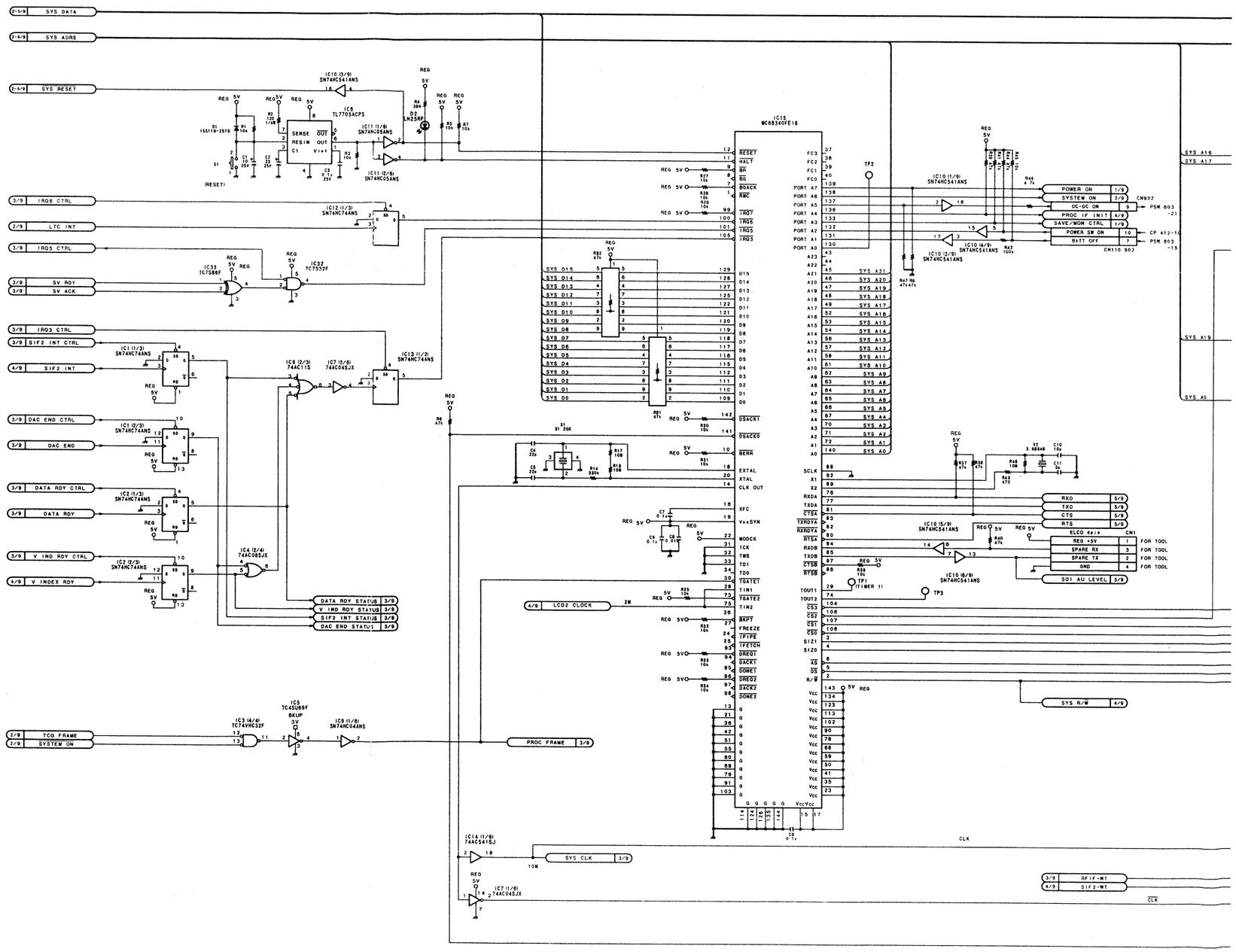

DVW-25025OP

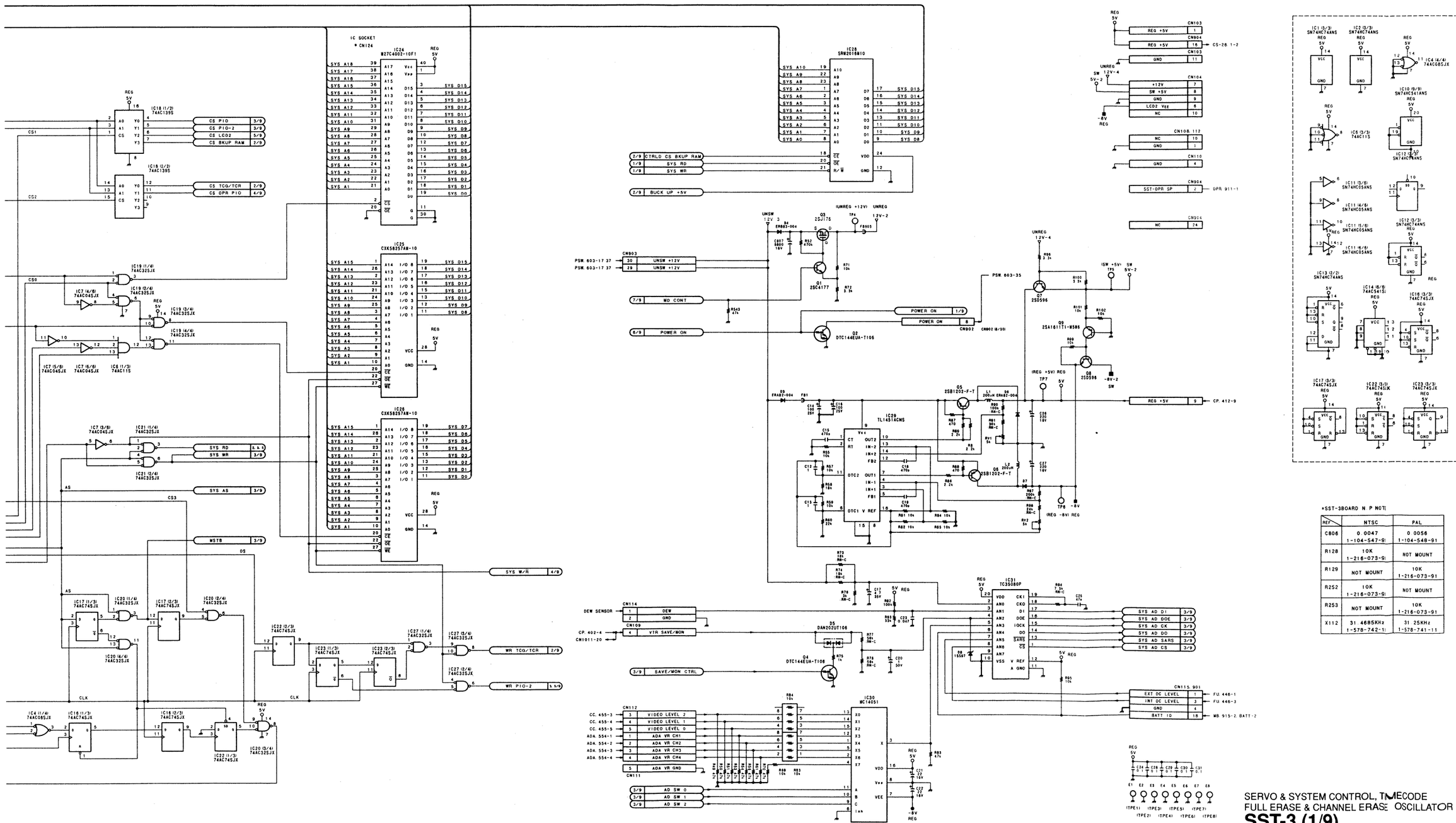

*SST-3BOARD N P NOTE

REF	NTSC	PAL
C806	0.0047 1-104-547-91	0.0056 1-104-548-91
R128	10K 1-216-073-91	NOT MOUNT
R129	NOT MOUNT	10K 1-216-073-91
R252	10K 1-216-073-91	NOT MOUNT
R253	NOT MOUNT	10K 1-216-073-91
X112	31.4685KHz 1-578-742-11	31.25KHz 1-578-741-11

SERVO & SYSTEM CONTROL, TIMECODE
FULL ERASE & CHANNEL ERASE OSCILLATOR

SST-3 (1/9)

BOARD NO. 1-657-804-11
LOT NO. 409-

B-¥DVW250-SST1-11

DVW-250 (J)
DVW-250 (UC)
DVW-250P (SY)

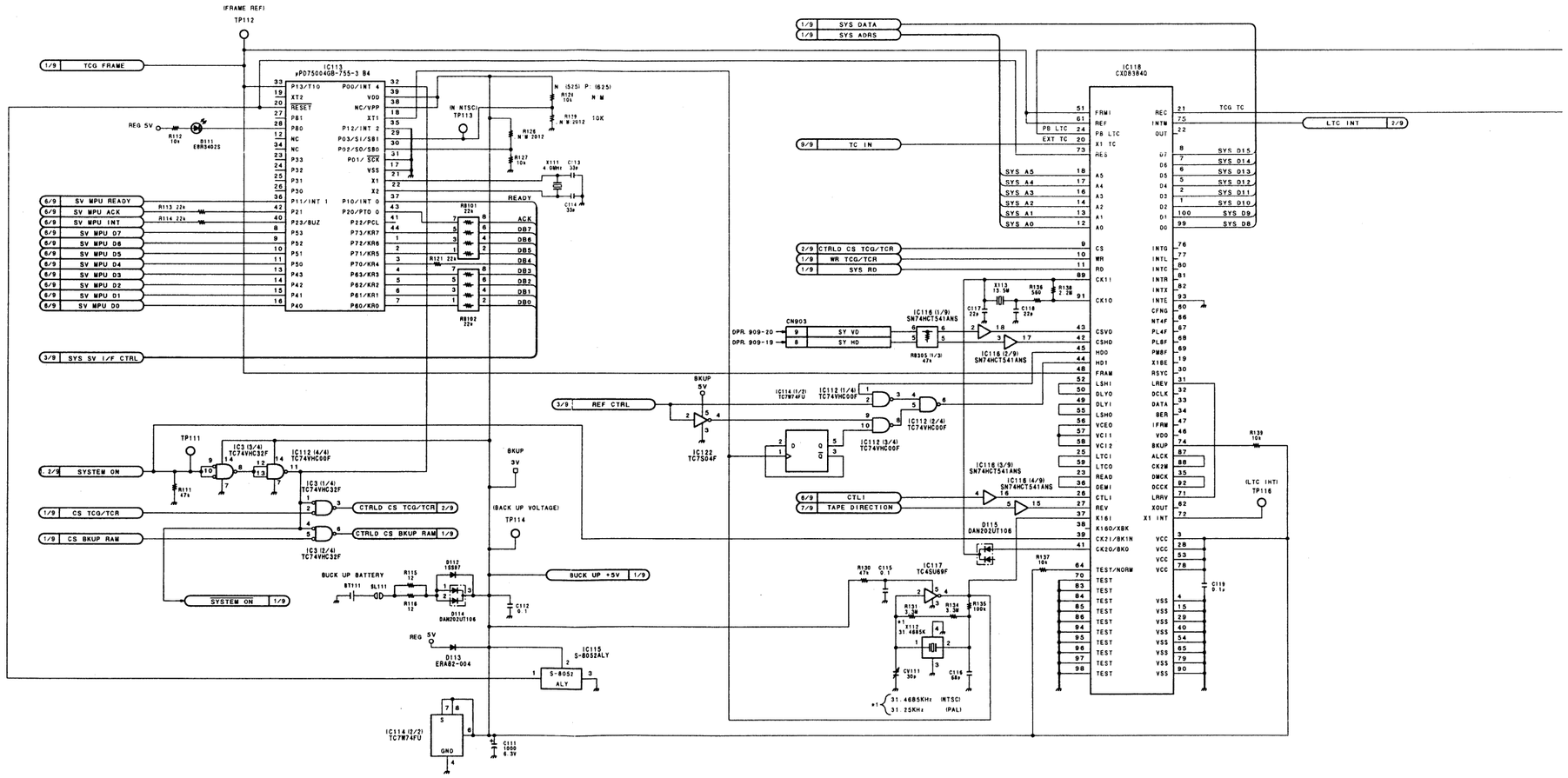

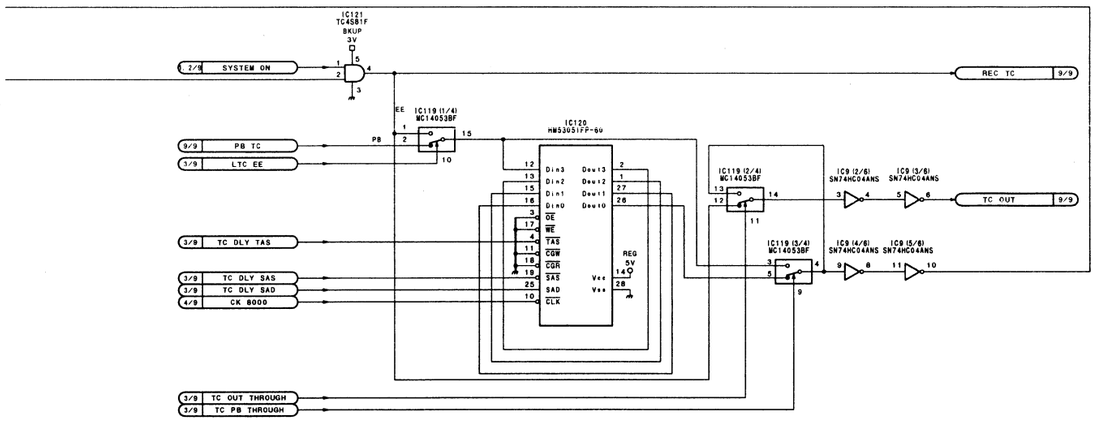

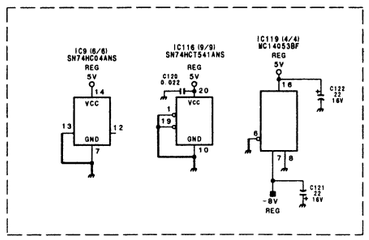

SERVO & SYSTEM CONTROL, TIMECODE
FULL ERASE & CHANNEL ERASE OSCILLATOR

SST-3 (2/9)

BOARD NO. 1-657-804-11
LOT NO. 409-

B-¥DVW250-SST1-11

DVW-250 (J)
DVW-250 (UC)
DVW-250P (SY)

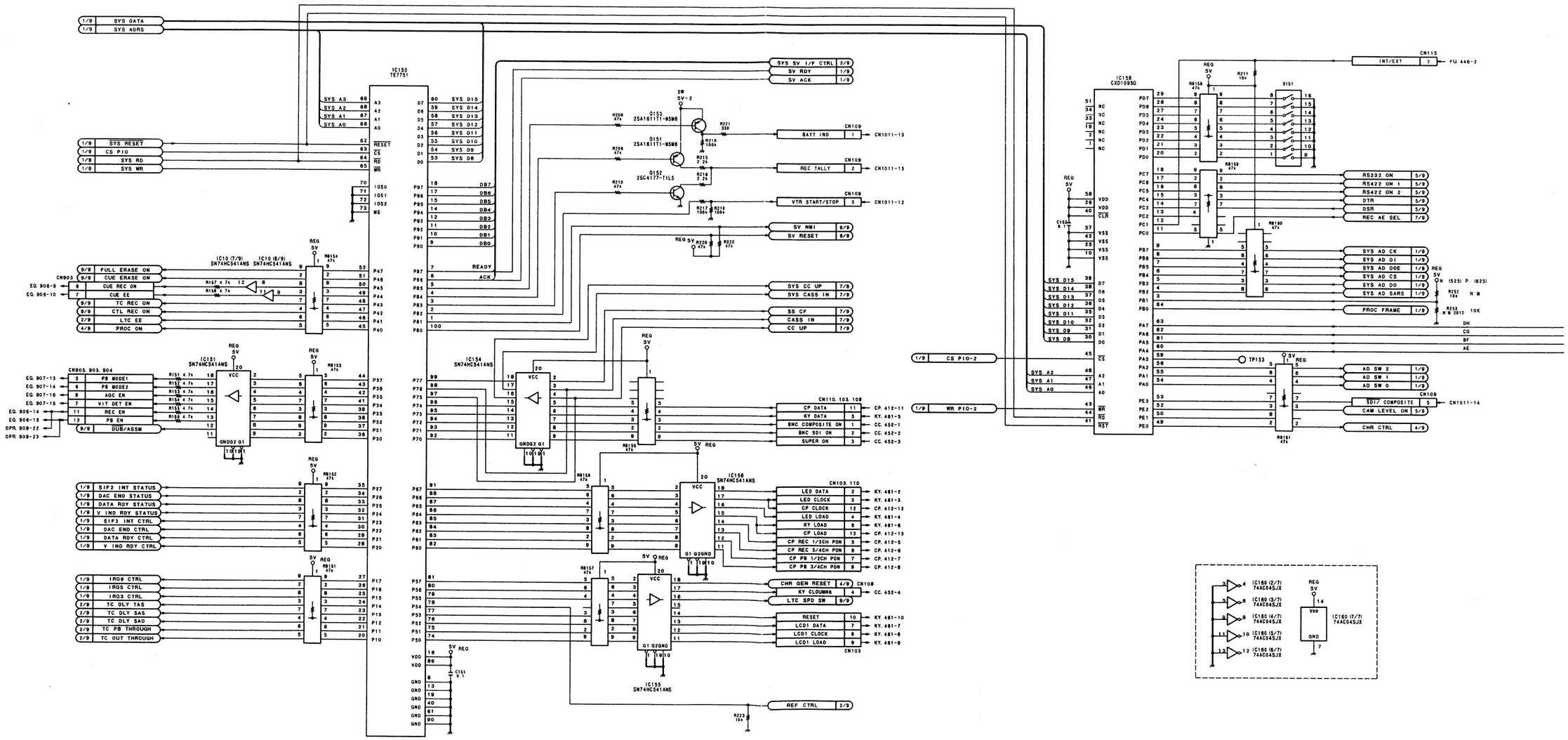

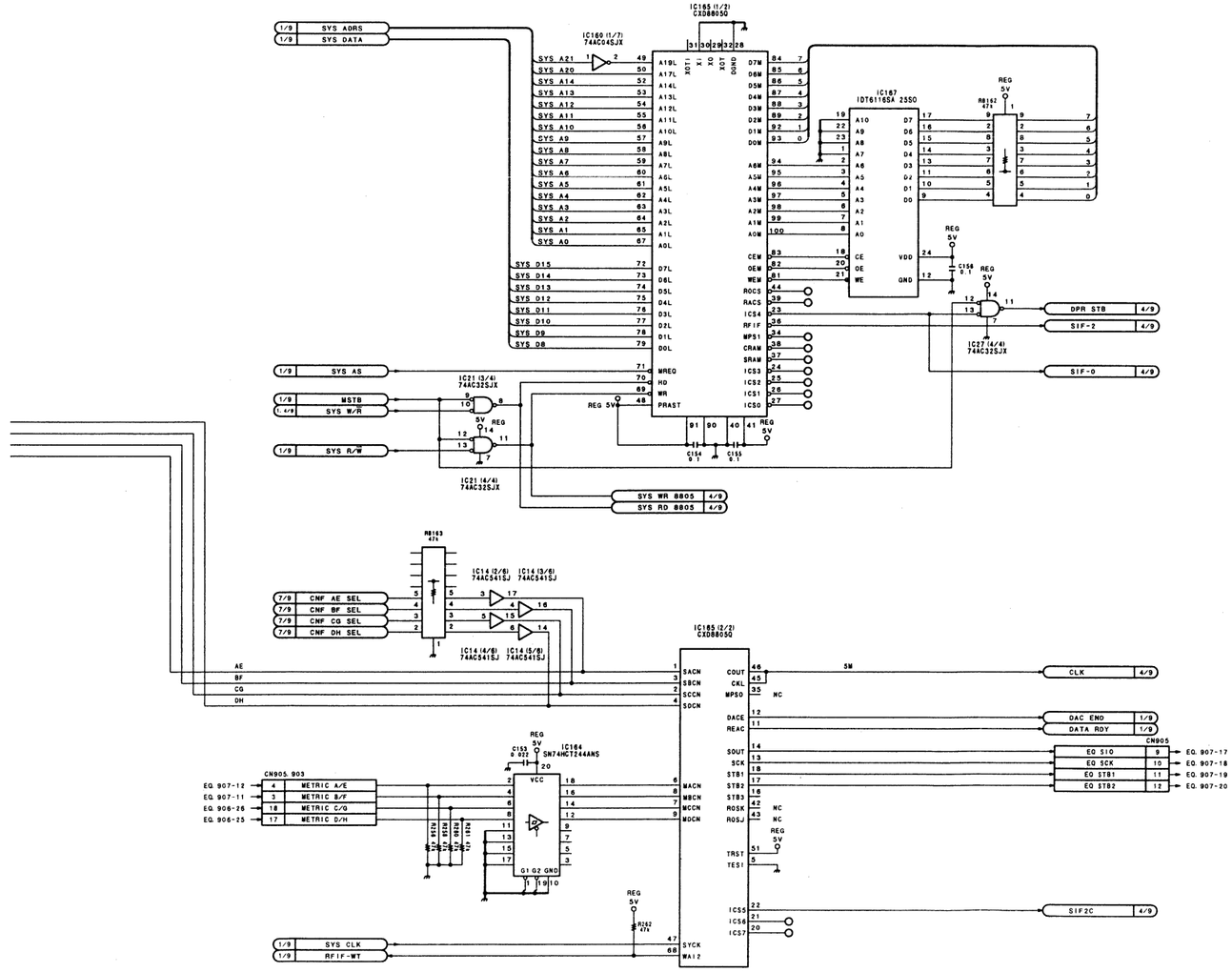

SERVO & SYSTEM CONTROL, TIMECODE
FULL ERASE & CHANNEL ERASE OSCILLATOR

SST-3 (3/9)

BOARD NO. 1-657-804-11
LOT NO. 409-

B-¥DVW250-SST1-11

DVW-250 (J)
DVW-250 (UC)
DVW-250P (SY)

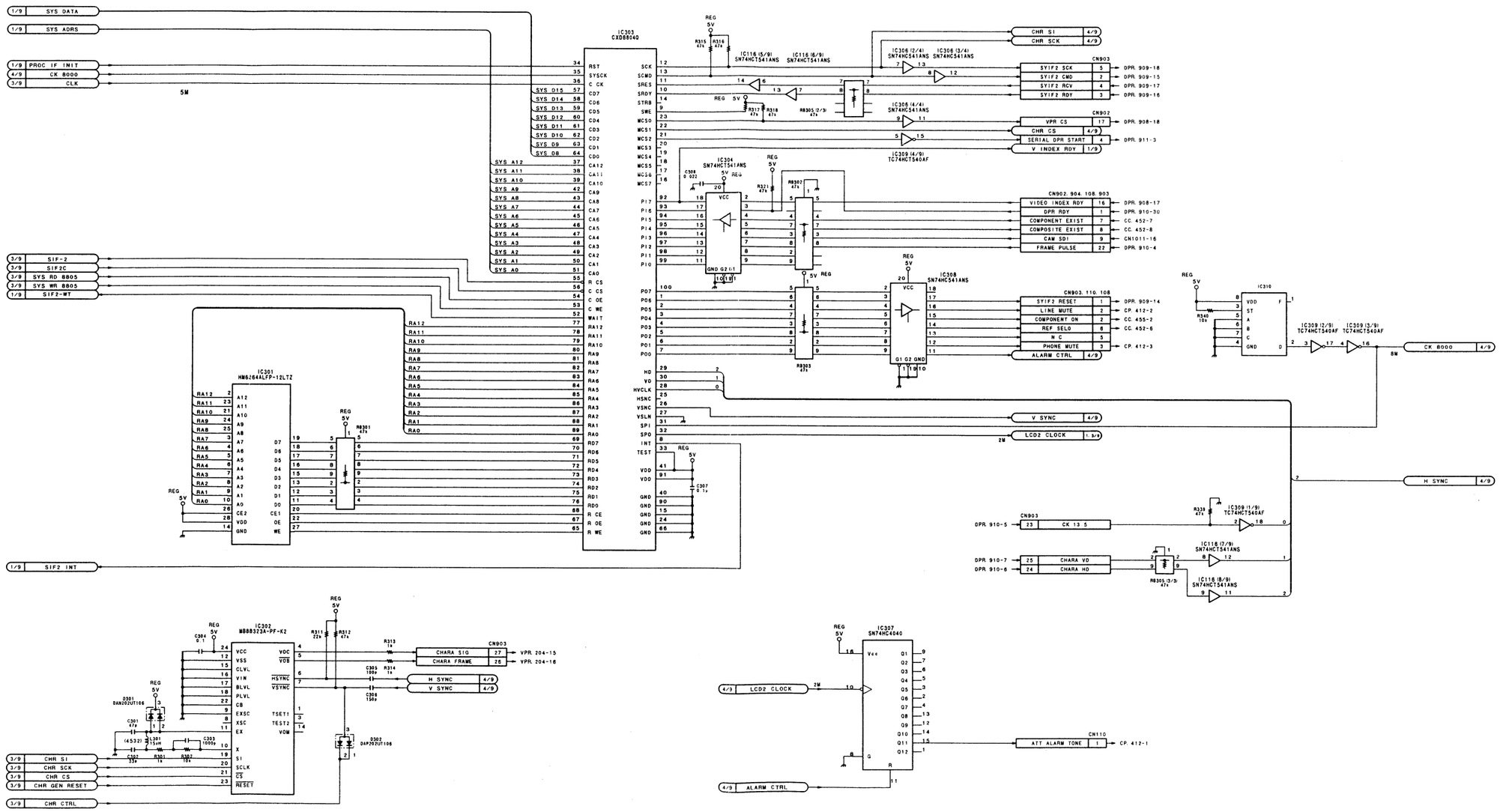

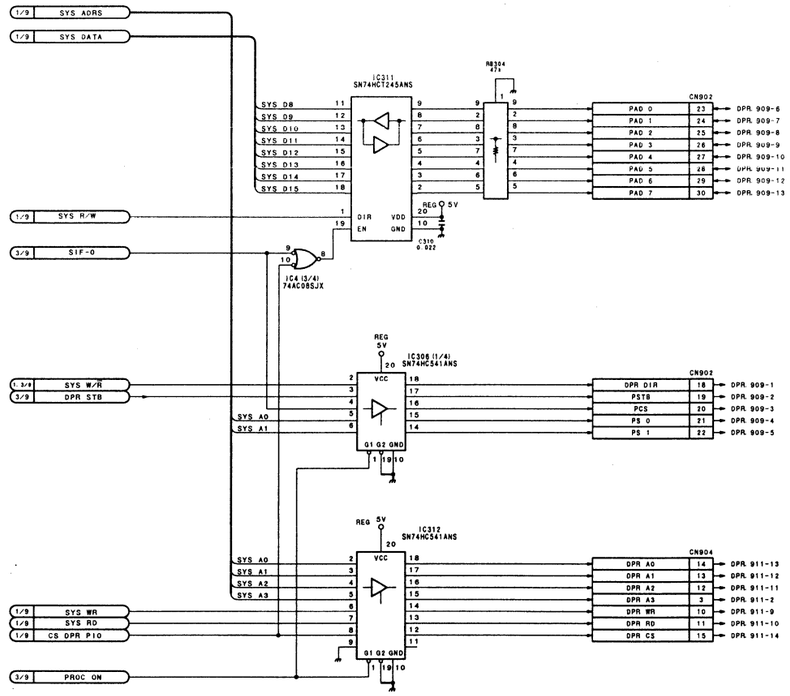

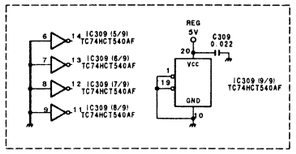

SERVO & SYSTEM CONTROL, TIMECODE
FULL ERASE & CHANNEL ERASE OSCILLATOR

SST-3 (4/9)

BOARD NO. 1-657-804-11
LOT NO. 409-

B-VDVW250-SST1-11

DVW-250 (J)
DVW-250 (UC)
DVW-250P (SY)

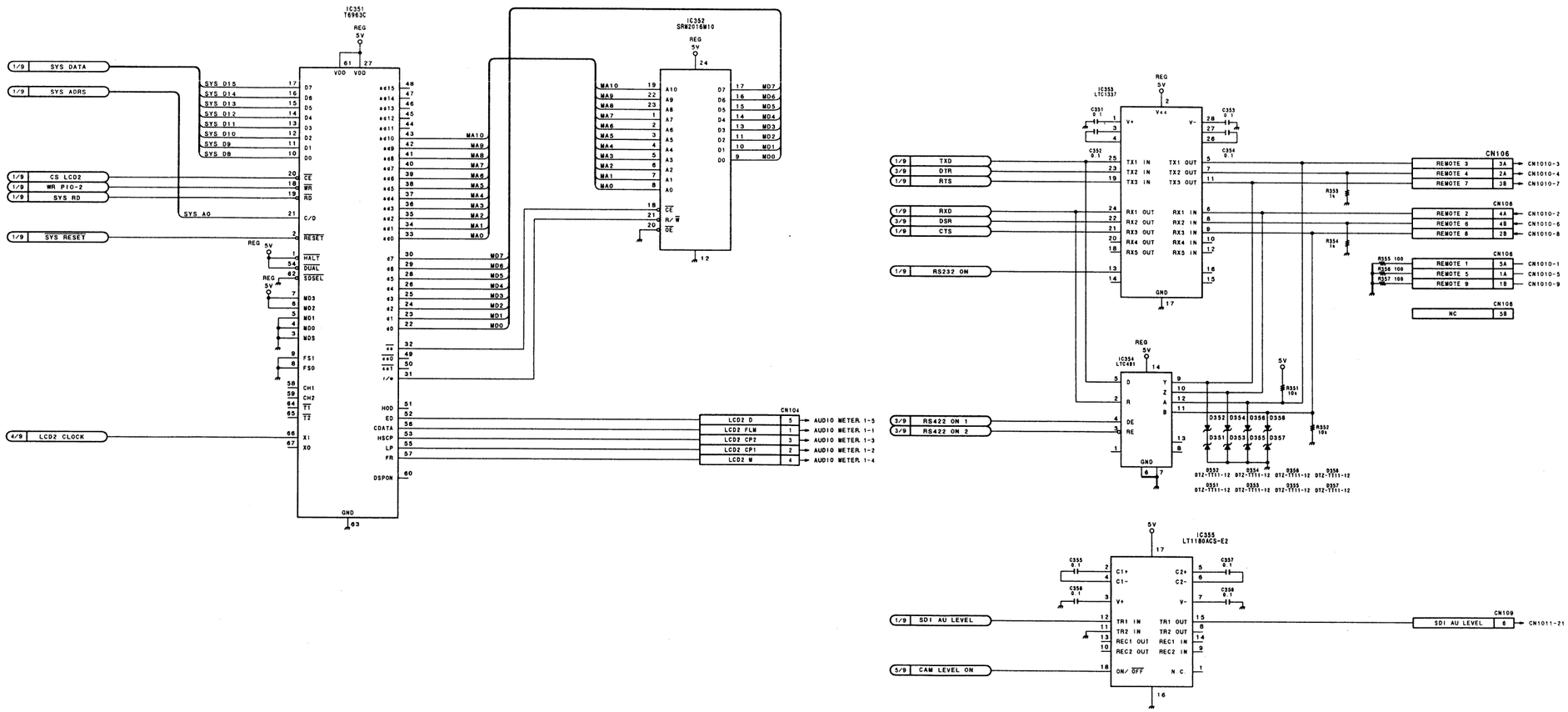

SERVO & SYSTEM CONTROL, TIMECODE
FULL ERASE & CHANNEL ERASE OSCILLATOR

SST-3 (5/9)

BOARD NO. 1-657-804-11
LOT NO. 409-
B-VDVW250-SST1-11

DVW-250 (J)
DVW-250 (UC)
DVW-250P (SY)

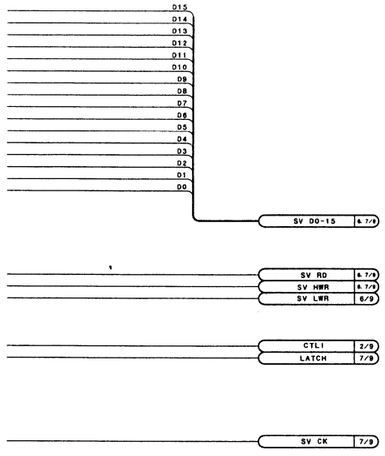

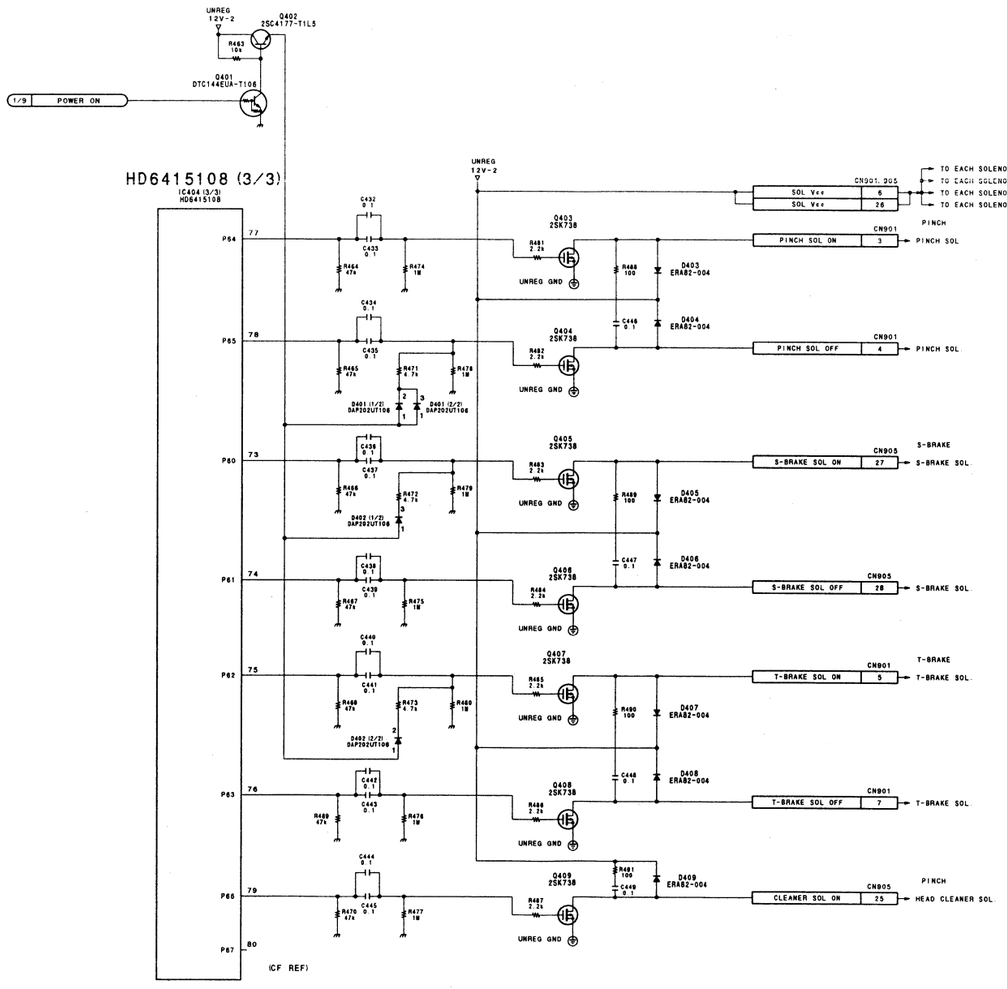

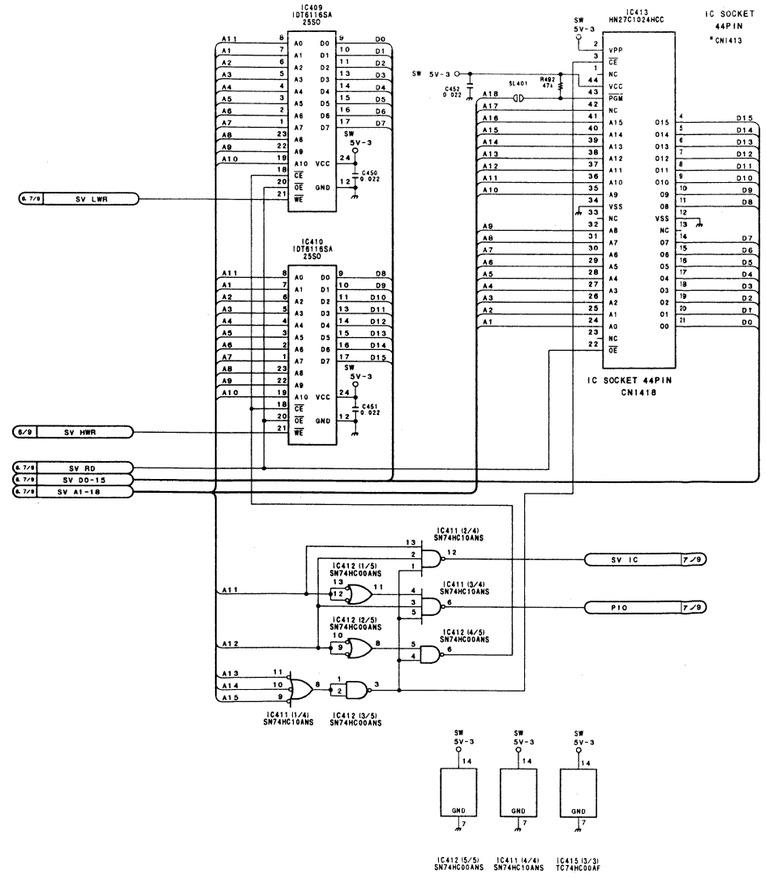

SERVO & SYSTEM CONTROL, TIMECODE
FULL ERASE & CHANNEL ERASE OSCILLATOR

SST-3 (6/9)

BOARD NO. 1-657-804-11
LOT NO. 409-
B-VDVW250-SST1-11

DVW-250 (J)
DVW-250 (UC)
DVW-250P (SY)

CXD2202Q (1/2)

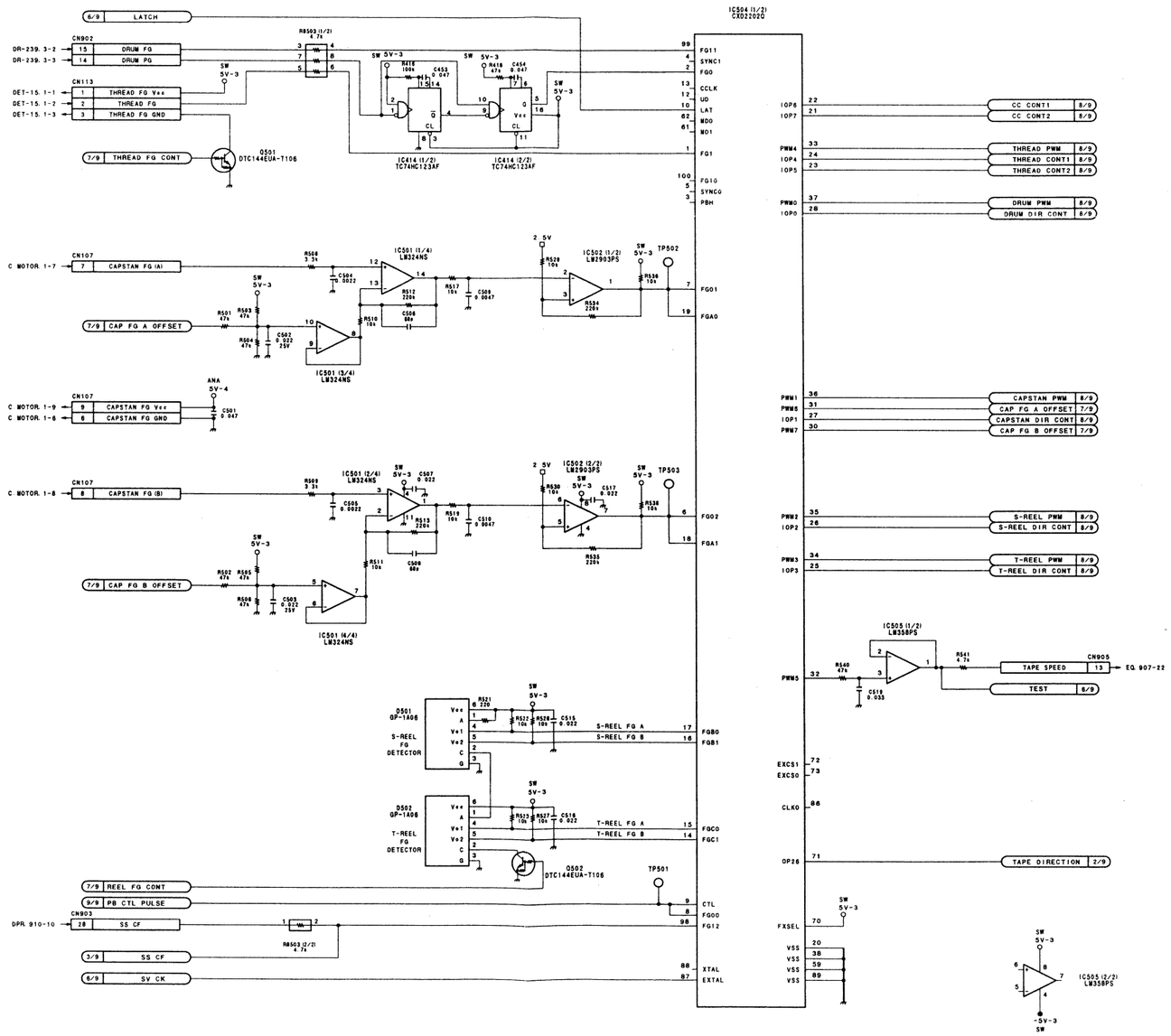

CXD2202Q (2/2)

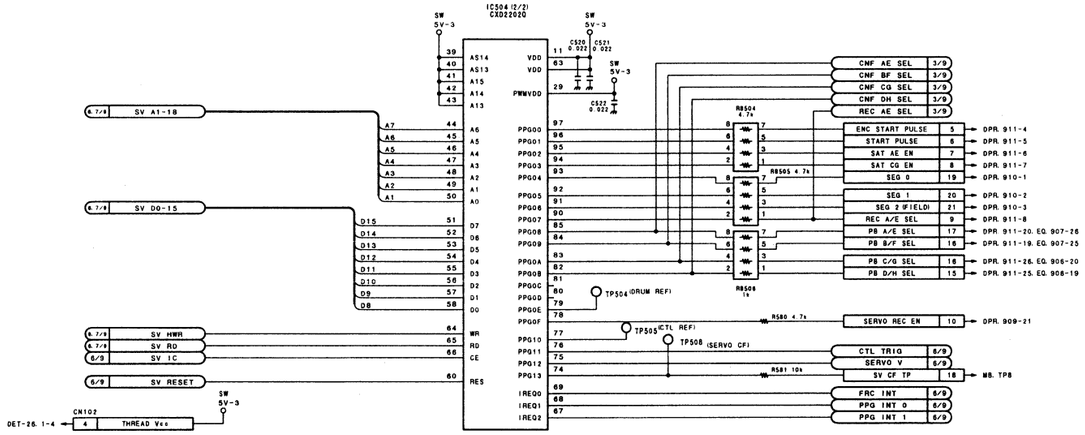

CXD1095Q (2/2)

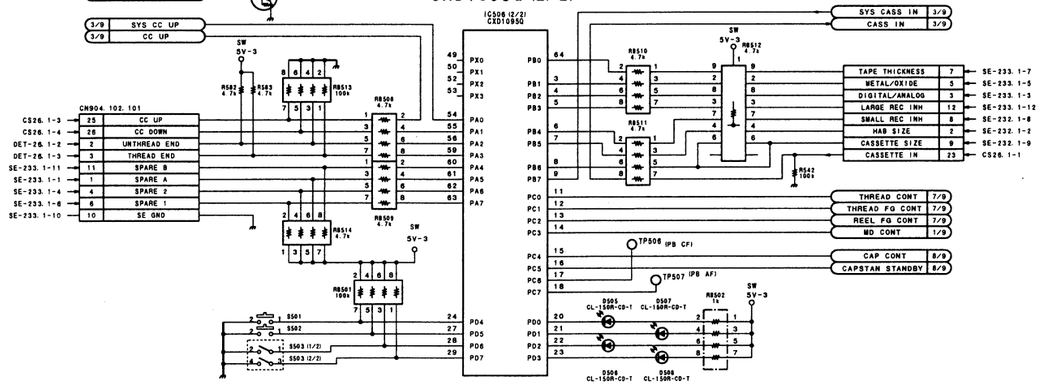

CXD1095Q (1/2)

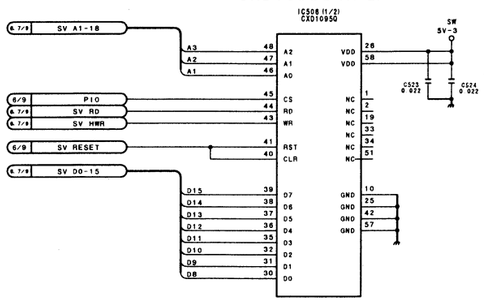

SERVO & SYSTEM CONTROL, TIMECODE
FULL ERASE & CHANNEL ERASE OSCILLATOR

SST-3 (7/9)

BOARD NO. 1-657-804-11
LOT NO. 409-

B-VDVW250-SST1-11

DVW-250 (J)
DVW-250 (UC)
DVW-250P (SY)

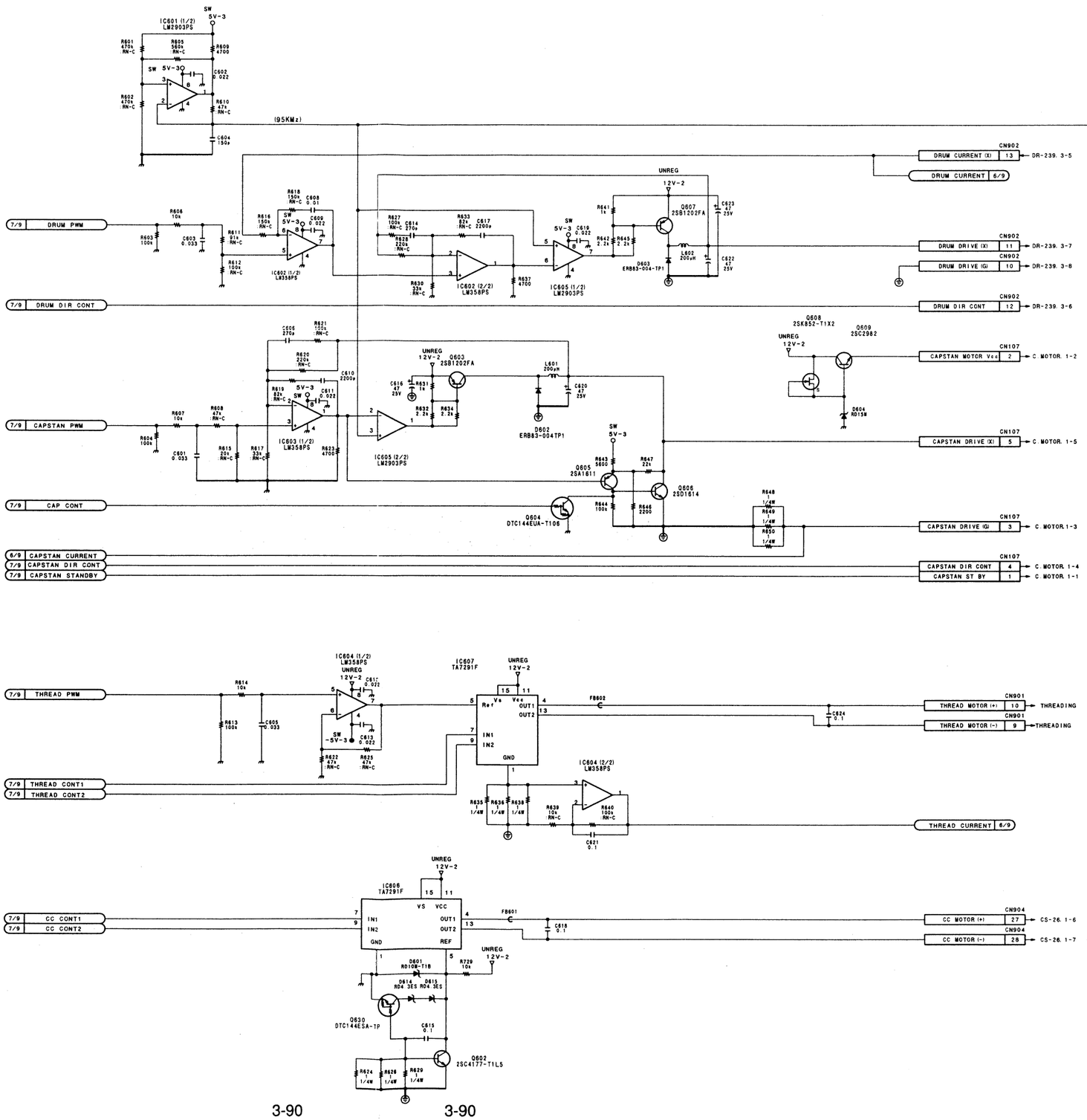

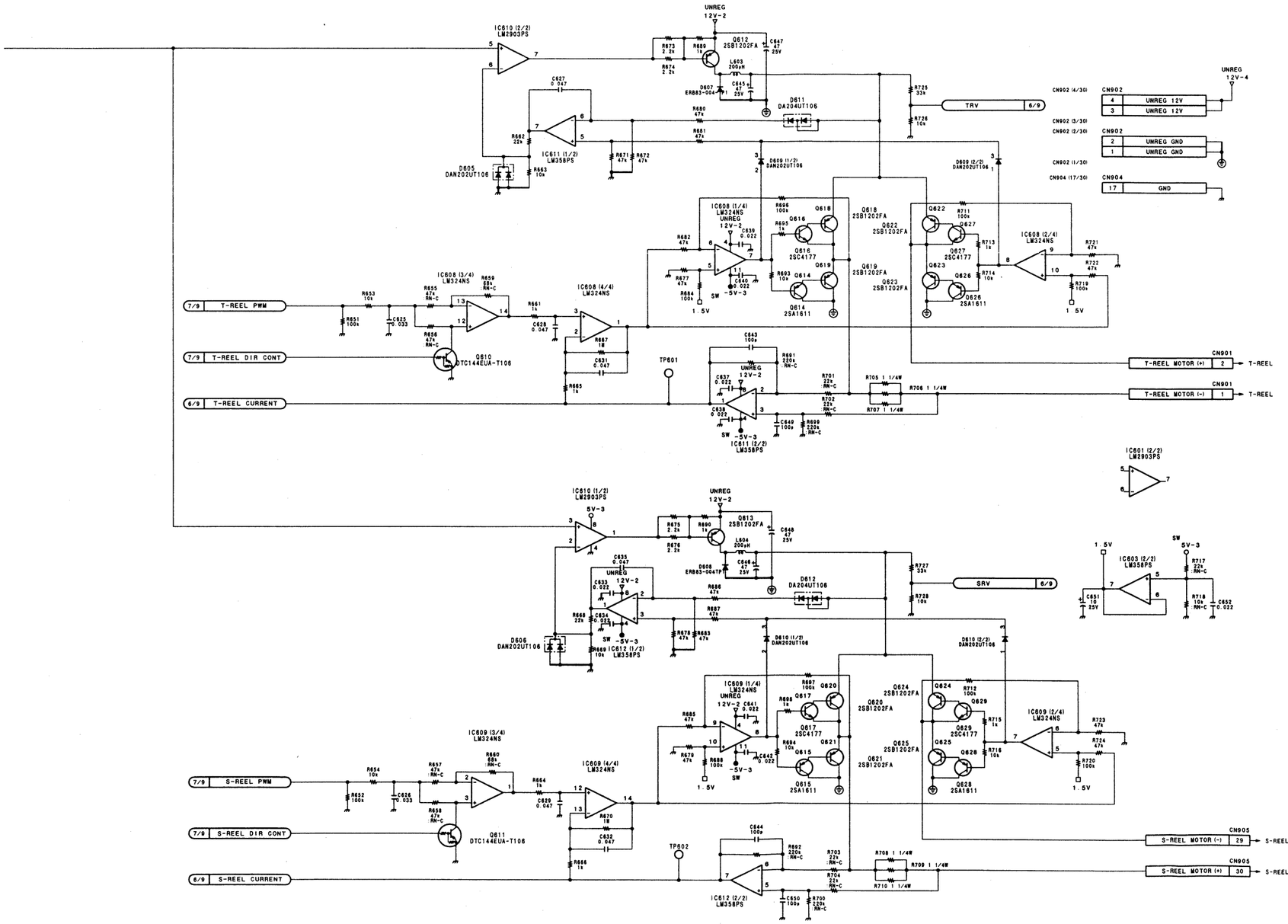

SERVO & SYSTEM CONTROL, TIMECODE
FULL ERASE & CHANNEL ERASE OSCILLATOR

SST-3 (8/9)

BOARD NO. 1-657-804-11
LOT NO. 409-
B-VDVW250-SST1-11

DVW-250 (J)
DVW-250 (UC)
DVW-250P (SY)

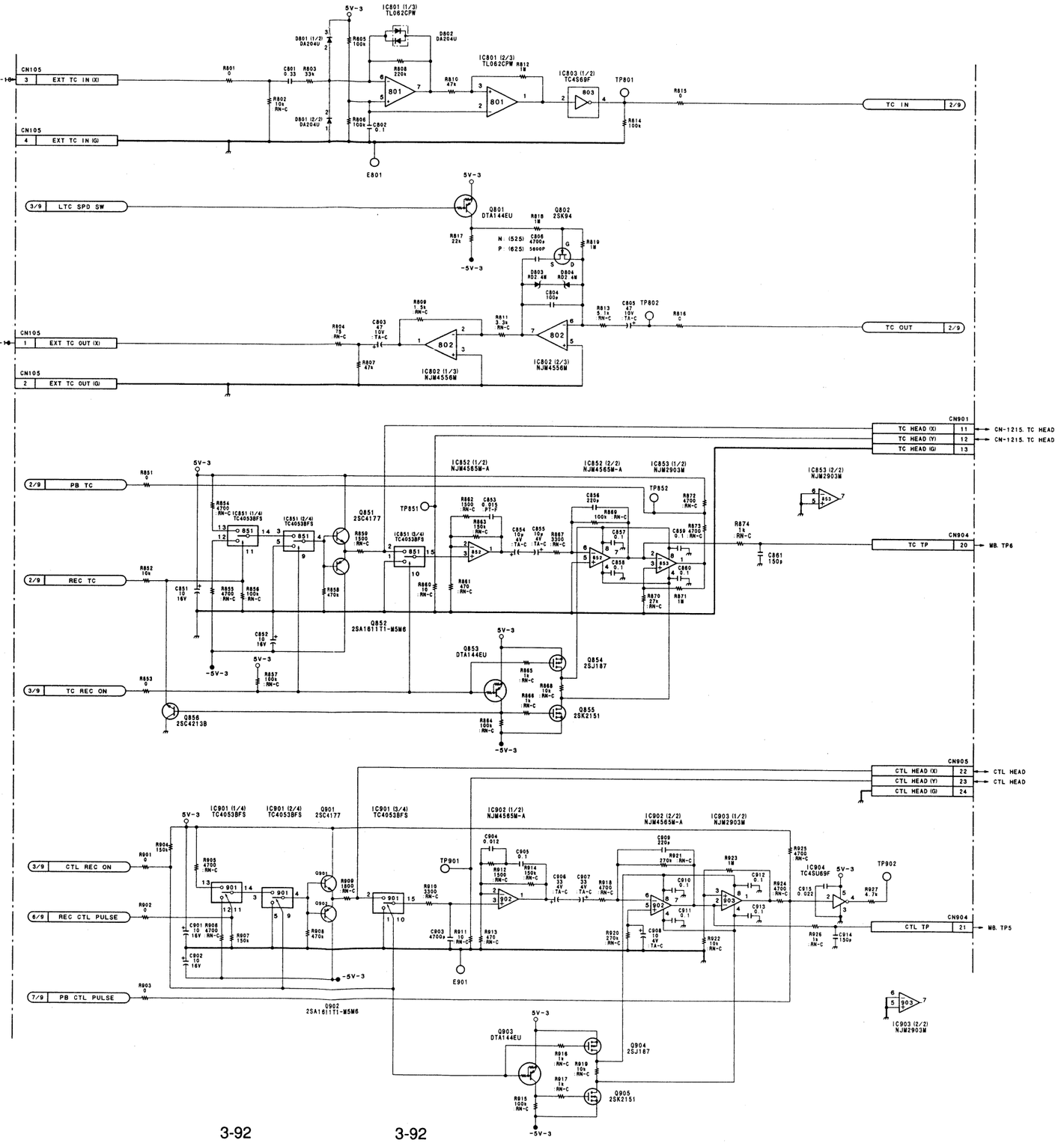

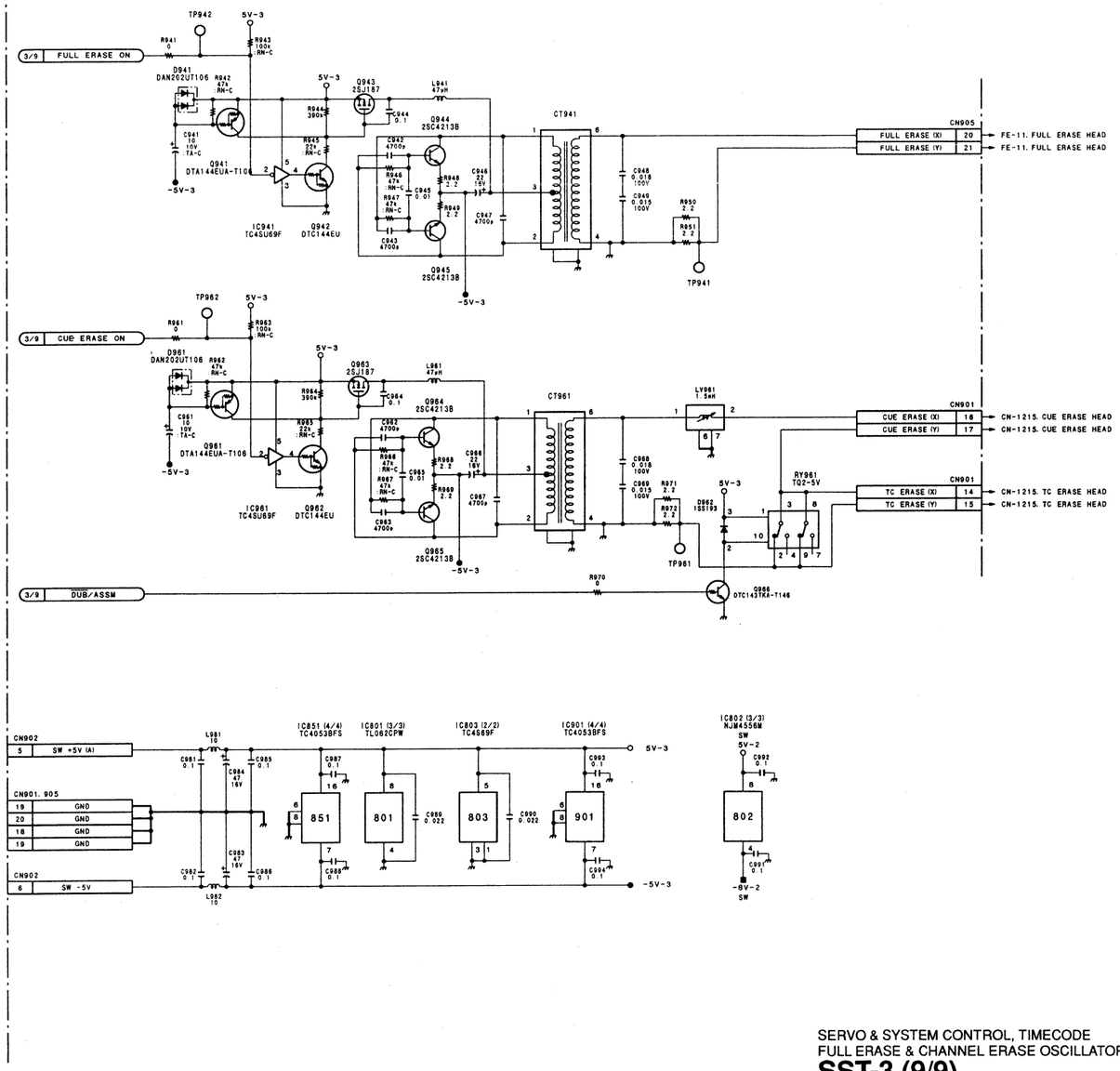

SERVO & SYSTEM CONTROL, TIMECODE
FULL ERASE & CHANNEL ERASE OSCILLATOR

SST-3 (9/9)

BOARD NO. 1-657-804-11
LOT NO. 409-

B-¥DVW250-SST1-11

DVW-250 (J)
DVW-250 (UC)
DVW-250P (SY)

KY-315 (1-657-807-11)

CN461	*A3	S27	D1
CN462	*A3	S28	D3
CN463	*D1	S29	E4

D1	*E4
D2	*D3
D3	*E4
D4	*E4
D5	*C4
D6	*D2
D7	*C3
D8	*C3
D9	*D4
D10	*C4
D11	*C4
D12	*B4
D13	*B4
D14	*B4
D15	*B4
D16	*D4
D17	*D3
D18	*D1
D19	*D2
D20	*D4
D21	*D4
D22	E4
D23	*E4
D24	A1
D25	B1
D26	C3
D27	C3
D28	B1
D29	C1
D30	D1
D31	C1
D32	C1
D33	A1
D34	A3
D35	B3
D36	D1
D37	C1
D38	D3

IC1	*C1
IC2	*B2
IC3	*C2
IC4	*B2
L1	A4
ND1	C1
Q2	*E4
Q3	*C4

S1	B2
S2	C2
S3	D2
S4	B3
S5	A3
S6	C3
S7	D3
S8	A2
S9	C3
S10	D1
S11	C4
S12	C4
S13	E4
S14	E4
S15	E4
S16	E4
S17	D4
S18	B4
S19	B4
S20	B4
S21	C4
S22	D4
S23	A4
S24	A4
S25	D4
S26	D4

* : Soldering Side

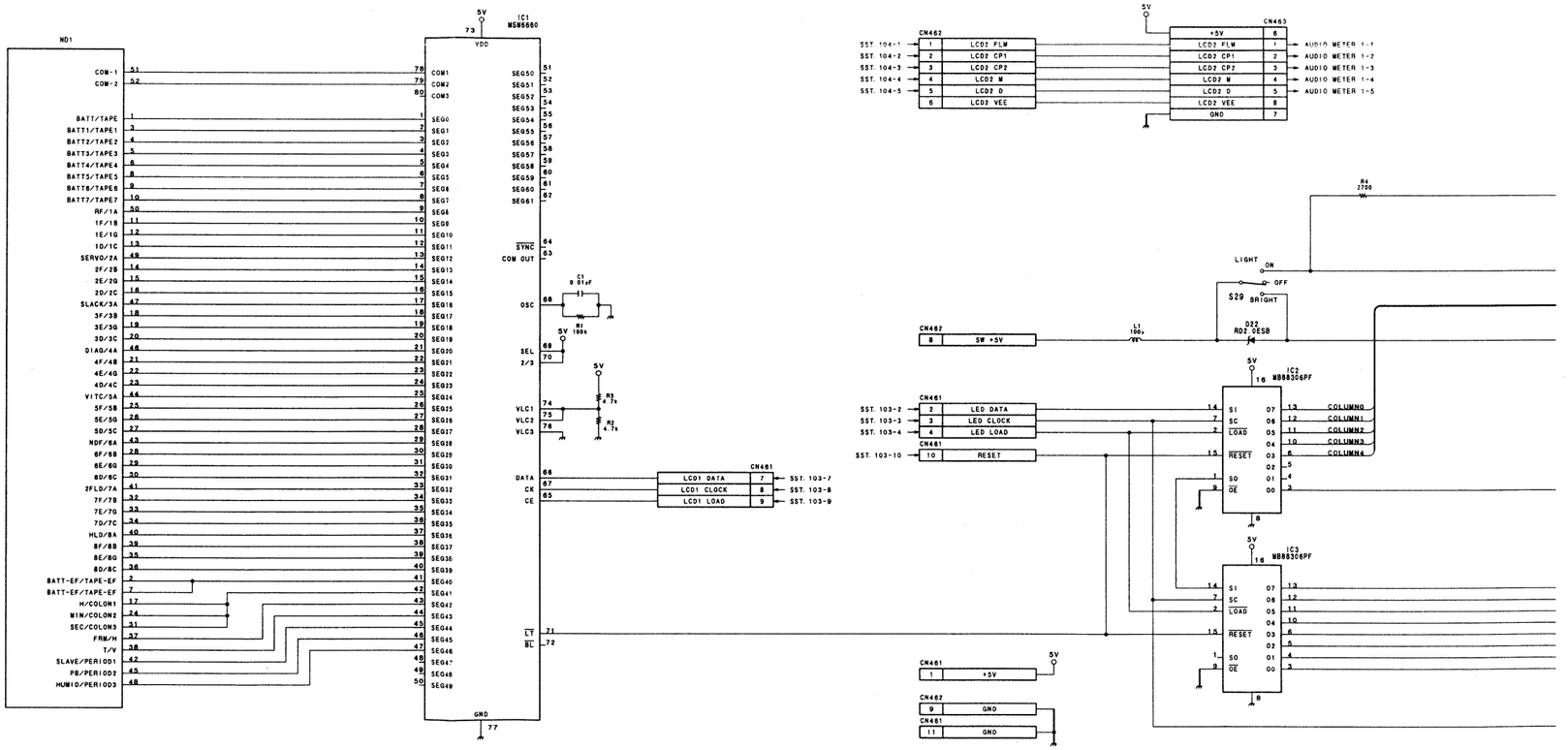

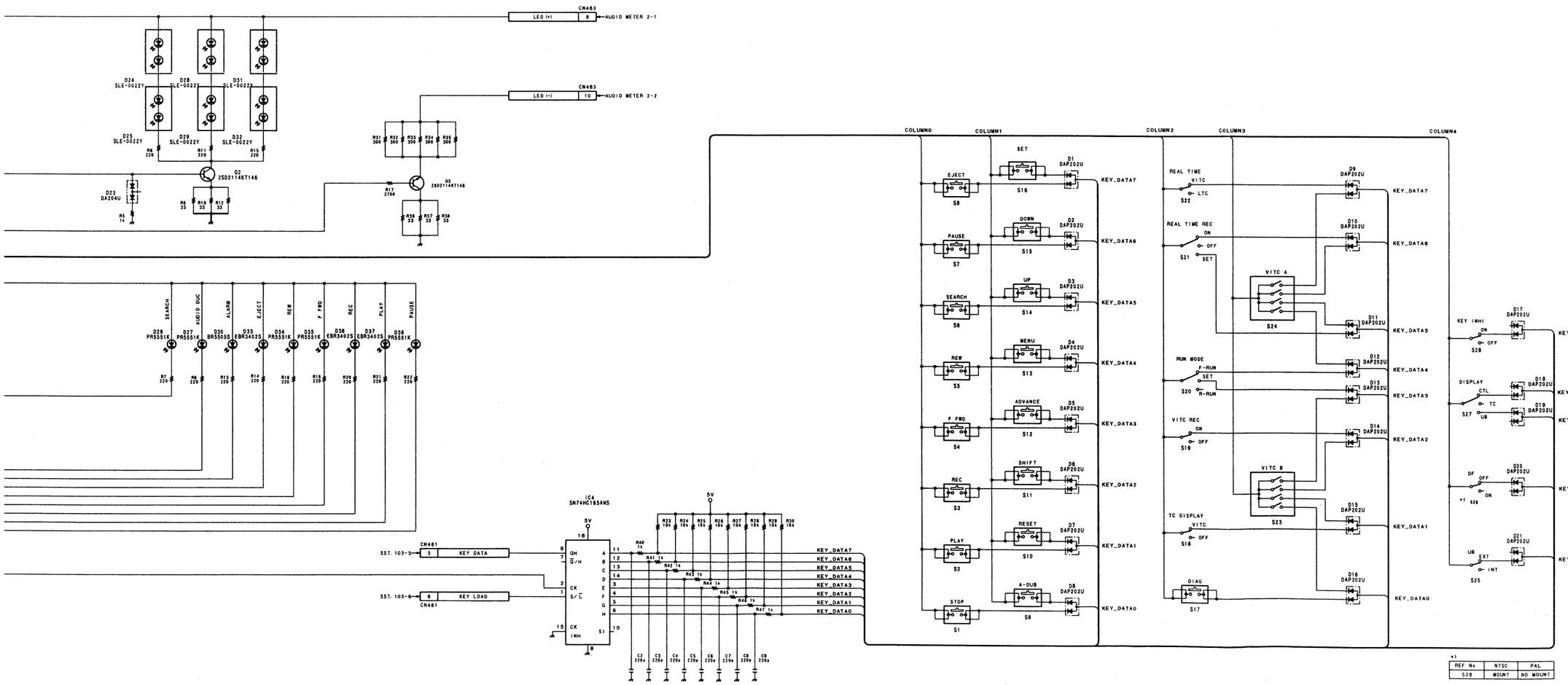

*1

REF No.	NTSC	PAL
S26	MOUNT	NO MOUNT

PANEL SWITCHES
KY-315
BOARD NO. 1-657-80 7-11
LOT NO. 409-
B-¥DVW250-KY315-11

SE-233, DET-15/26

DVW-250 (J)
DVW-250 (UC)
DVW-250P (SY)

SE-233 (1-657-800-11)

CN1	A1
S1	A1
S2	A1
S3	A1
S4	A1
S7	A1
S8	A1
S9	A1
S10	A1
S11	A1

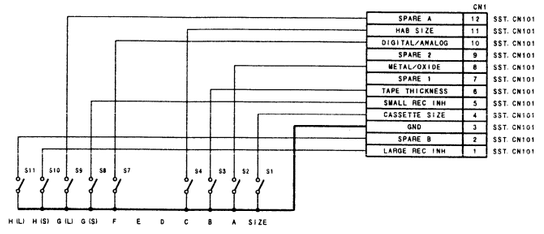

SENSOR (CASSETTE CODING)
SE-233
BOARD NO. 1-657-800-11
LOT NO. 409-
B-¥DVW250-SE233-11

DET-26 (1-657-801-11,-12)

CN1	*A1
PD1	A1
PD2	A1
Q1	A1
Q2	A1

* : Soldering Side

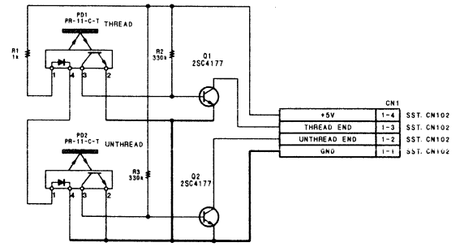

SENSOR (THREAD/UNTHREAD)
DET-26
BOARD NO. 1-657-801-11,-12
LOT NO. 409-
B-¥DVW250-DET26-11

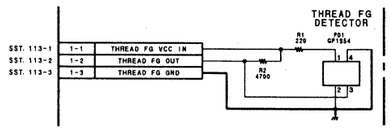

CASSETTE IN DETECTOR
DET-15
BOARD NO. 1-638-705-11
LOT NO. 409-
B-¥DVW250-DET15-S/M

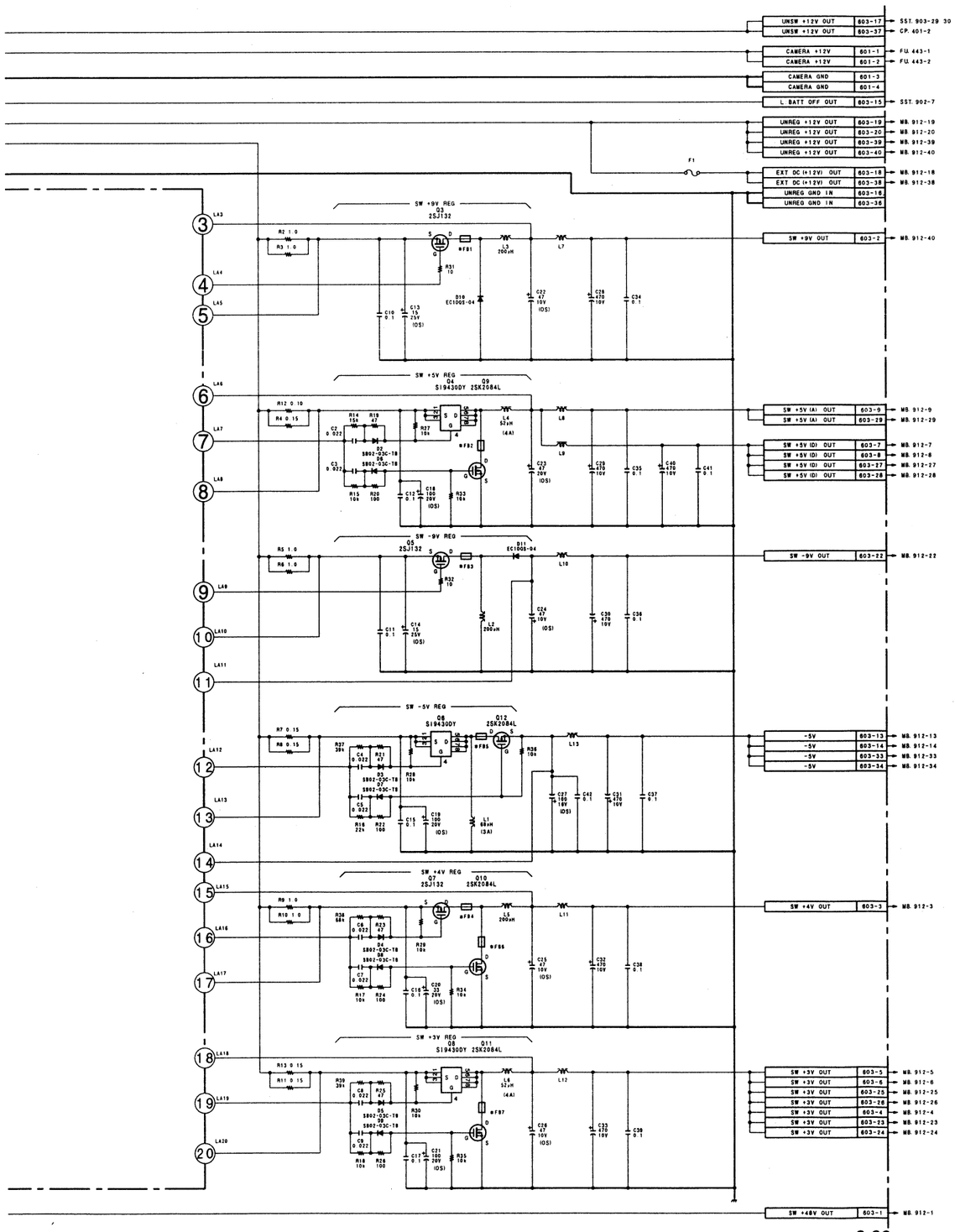

DC-DC CONVERTER
PSW-31A
BOARD NO. 1-657-796-11
LOT NO. 409-
B-¥DVW250-PSW31A-11

I J K L M N O P

DVW-250 (J)
DVW-250 (UC)
DVW-250P (SY)

PSW-31B (1-657-797-11)

1	D101	D1
	D102	D2
	IC101	D2
	IC102	D1
	IC103	B1
	IC104	C1
	IC105	A1
	Q101	D1
	Q102	D1
	Q103	D1
	Q104	D1
	Q105	B1
	Q106	B2
	Q107	B1
	Q108	C2
2	Q109	A1
	Q110	A2
	Q111	B2
	Q112	C2
	Q113	A2
	Q114	A2
	Q115	B2
	Q116	A2
	Q117	B2
	Q118	B2
	Q119	C2
	Q120	C2
	Q121	A2
	Q122	A2
	Q123	B2
	Q124	B2
	Q125	B2
	Q126	B2
3	Q127	A2
	Q128	A2
	Q129	B2
	Q130	C2
	Q131	A2
	Q132	B2
	Q133	C2
	Q134	A2
	Q135	B2
	Q136	C2
	Q137	A2
	TH101	A2
	TH102	B2
	TH103	A2

∗ : Soldering Side

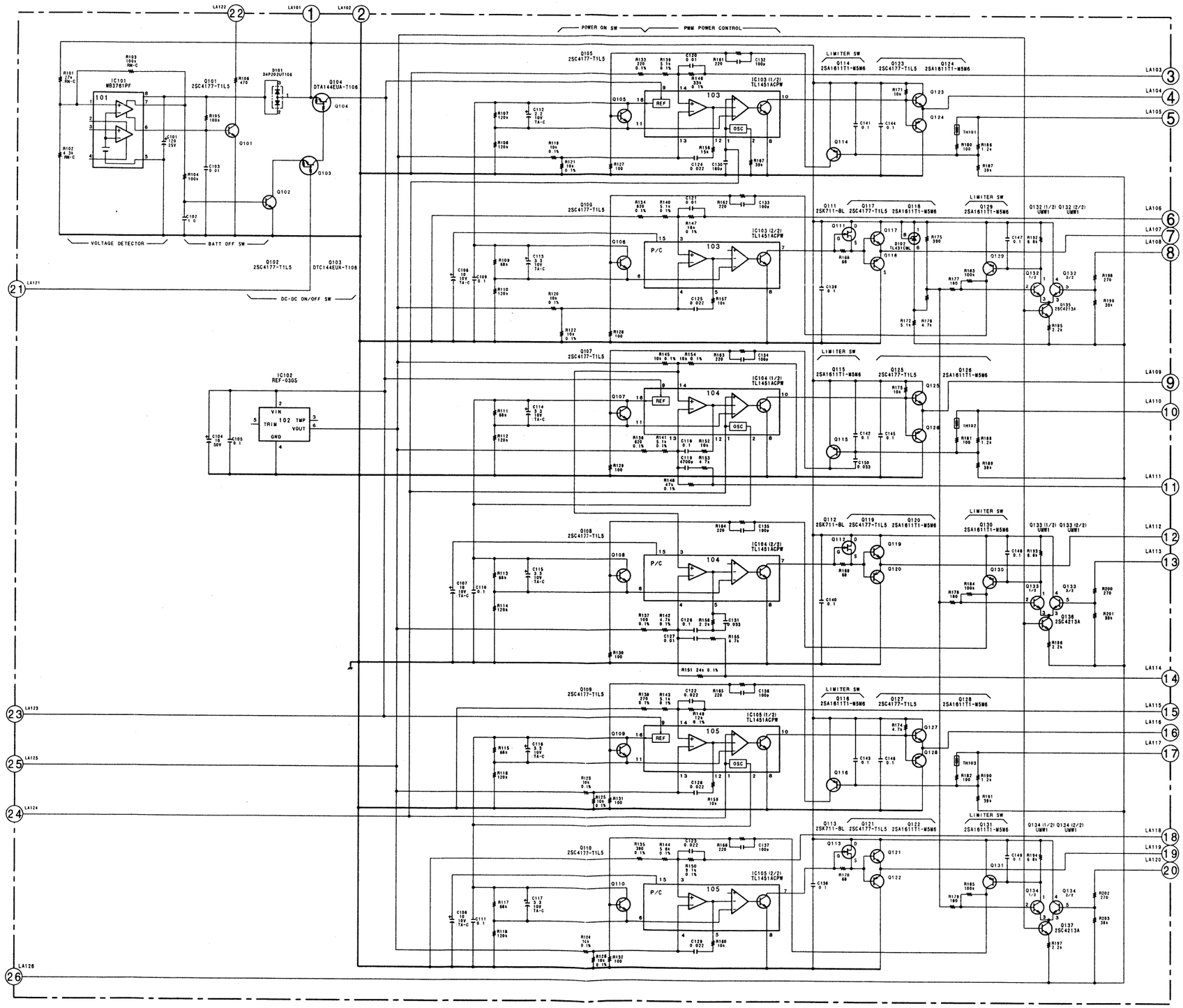

DC-DC CONVERTER
PSW-31B
BOARD NO. 1-657-797-11
LOT NO. 409-
B-¥DVW250-PSW31B-11

DVW-250 (J)
DVW-250 (UC)
DVW-250P (SY)

PSW-31C (1-657-798-11)

D301	C1
IC301	*A2
L301	B1
Q301	*A2
Q302	*B2
Q303	*B2
Q304	*B1
Q305	*B1
Q306	*B1
Q307	C1
TH301	*B2

* : Soldering Side

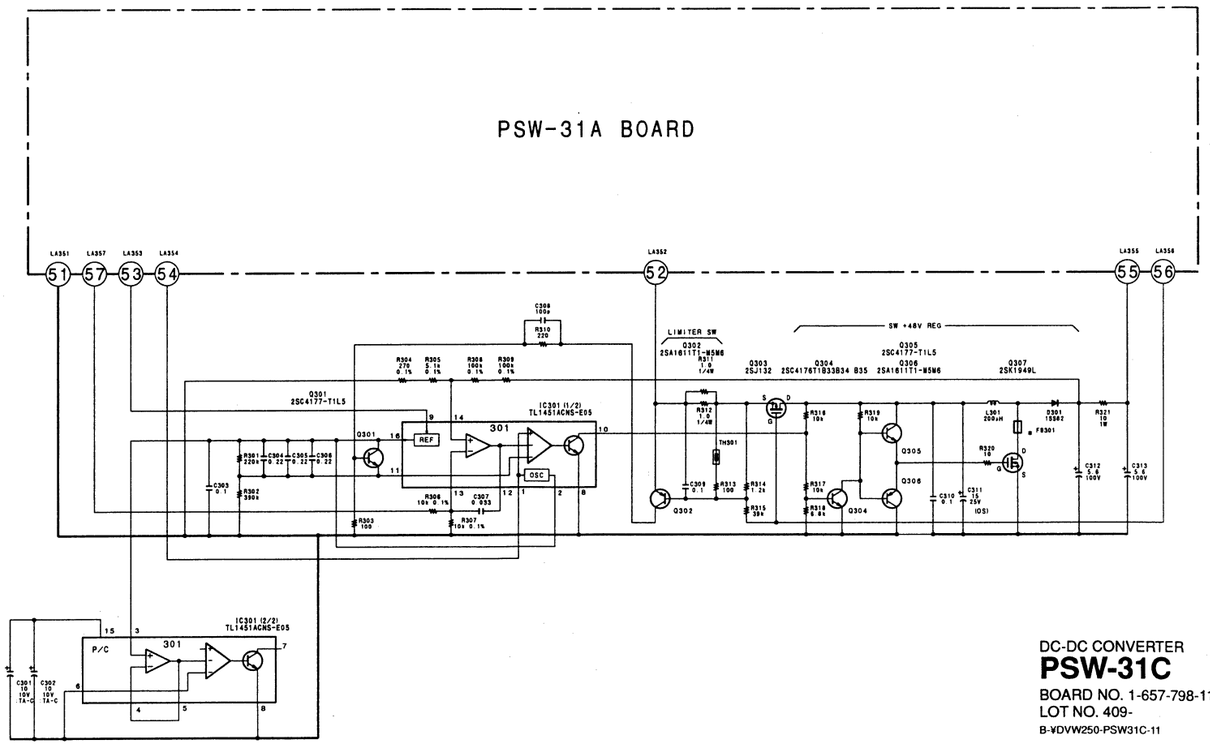

DC-DC CONVERTER
PSW-31C
BOARD NO. 1-657-798-11
LOT NO. 409-
B-¥DVW250-PSW31C-11

DVW-250 (J)
DVW-250 (UC)
DVW-250P (SY)

FU-63 (1-657-813-11)

CN441	A3
CN442	A3
CN443	A1
CN444	A1
CN445	A1
CN446	A1
D1	*A1
D2	A2
D3	*A1
D4	*A2
F1	*A3
F2	*A3
IC1	A2
Q1	*A2
Q2	A2
Q3	*A2
Q4	*A1
Q5	A3
Q6	A3
Q7	A2
Q8	*A1

* : Soldering Side

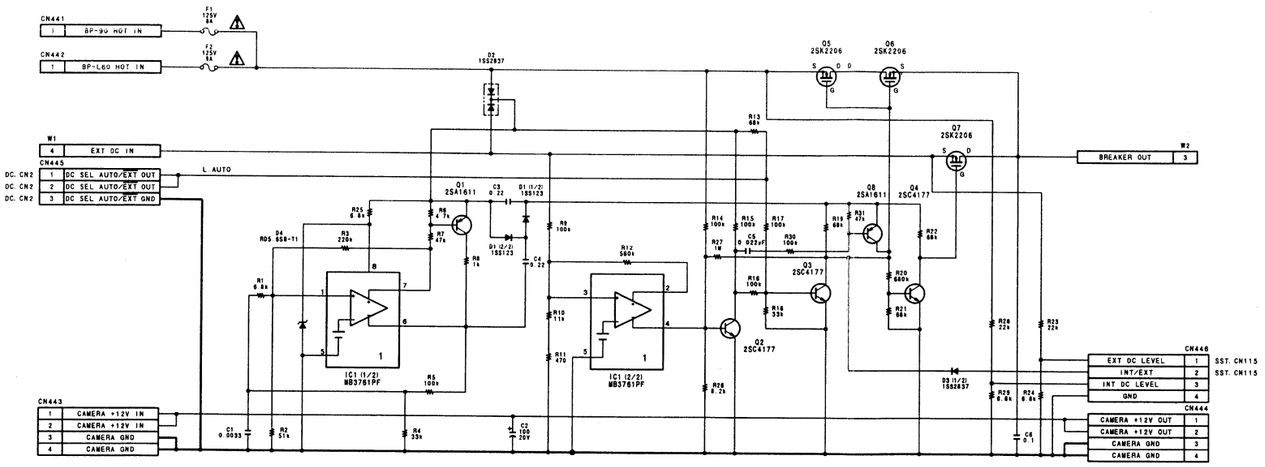

FUSE
FU-63
BOARD NO. 1-657-813-11
LOT NO. 409-
B-¥DVW250-FU63-11

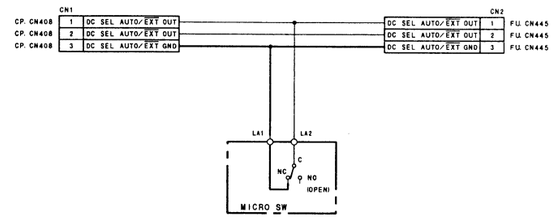

DC INPUT SELECT SWITCH
DC-85
BOARD NO. 1-658-773-11
LOT NO. 409-
B-¥DVW250-DC85-11

DVW-250 (J)
DVW-250 (UC)
DVW-250P (SY)

MB-601 (1-657-803-11)

CN901	A1
CN902	B1
CN903	D1
CN904	E1
CN905	F1
CN906	*C1
CN907	*E1
CN908	A1
CN909	B1
CN910	C1
CN911	E1
CN912	*A3
CN913	D3
CN914	A1
CN915	C3
CN921	*A3
CN923	*A1
CN930	*A2
CN931	B3
CN932	B3
CN941	A3
CN942	A3
CN943	A3
CN944	A3
CN946	A3
CN947	A3
CN949	A3
CN951	F3
CN952	F3
CN953	A3
CN954	E3
CN955	F3
CN956	E3
CN957	E3
CN958	E3
CN960	F3
E1	F3
E2	C3
TP1	F3
TP2	E3
TP3	E3
TP4	E3
TP5	E3
TP6	E3
TP7	E3
TP8	E3
TP9	D3
TP10	D3
TP11	D3
TP12	C3
TP13	C3
TP14	C3

* : Soldering Side

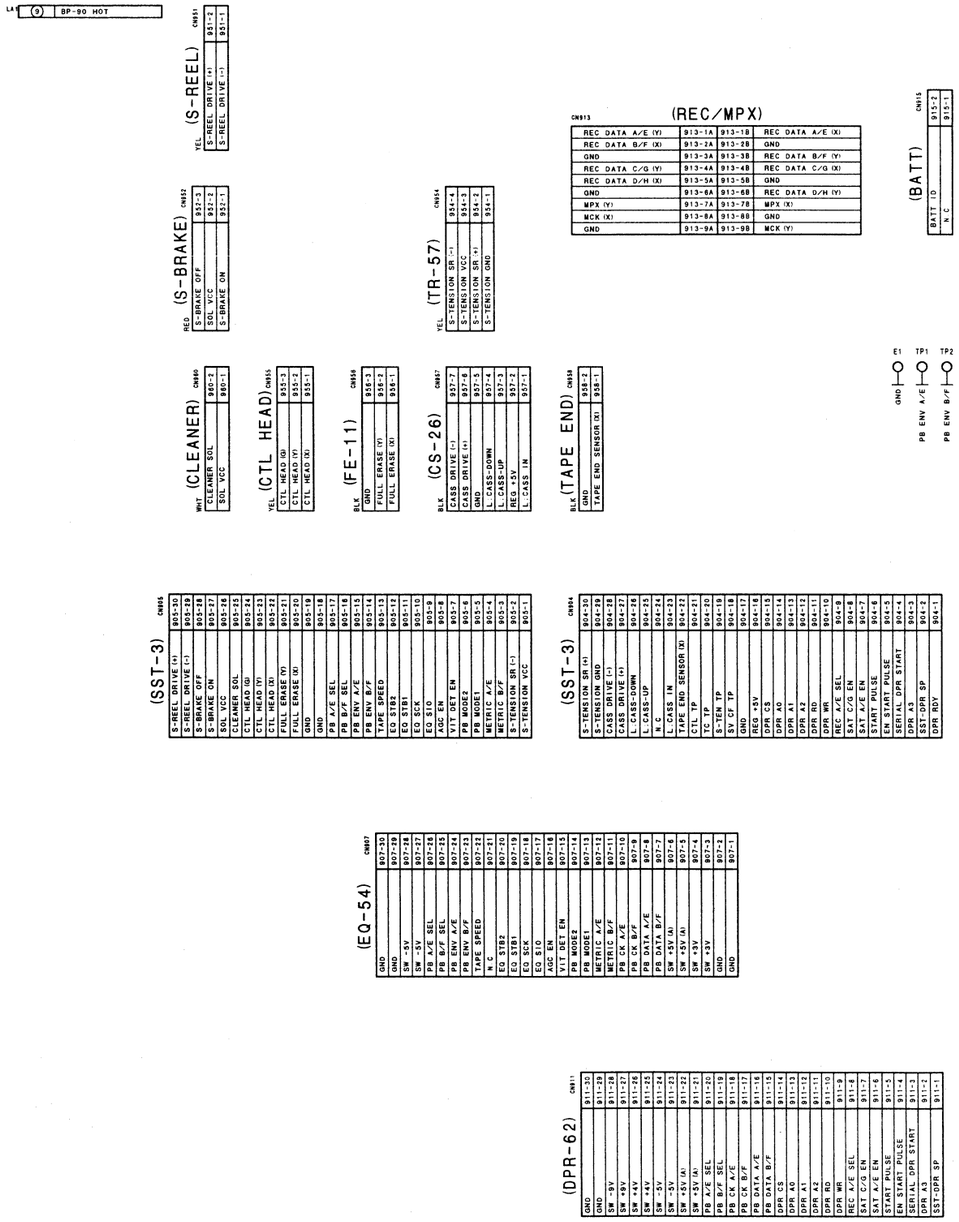

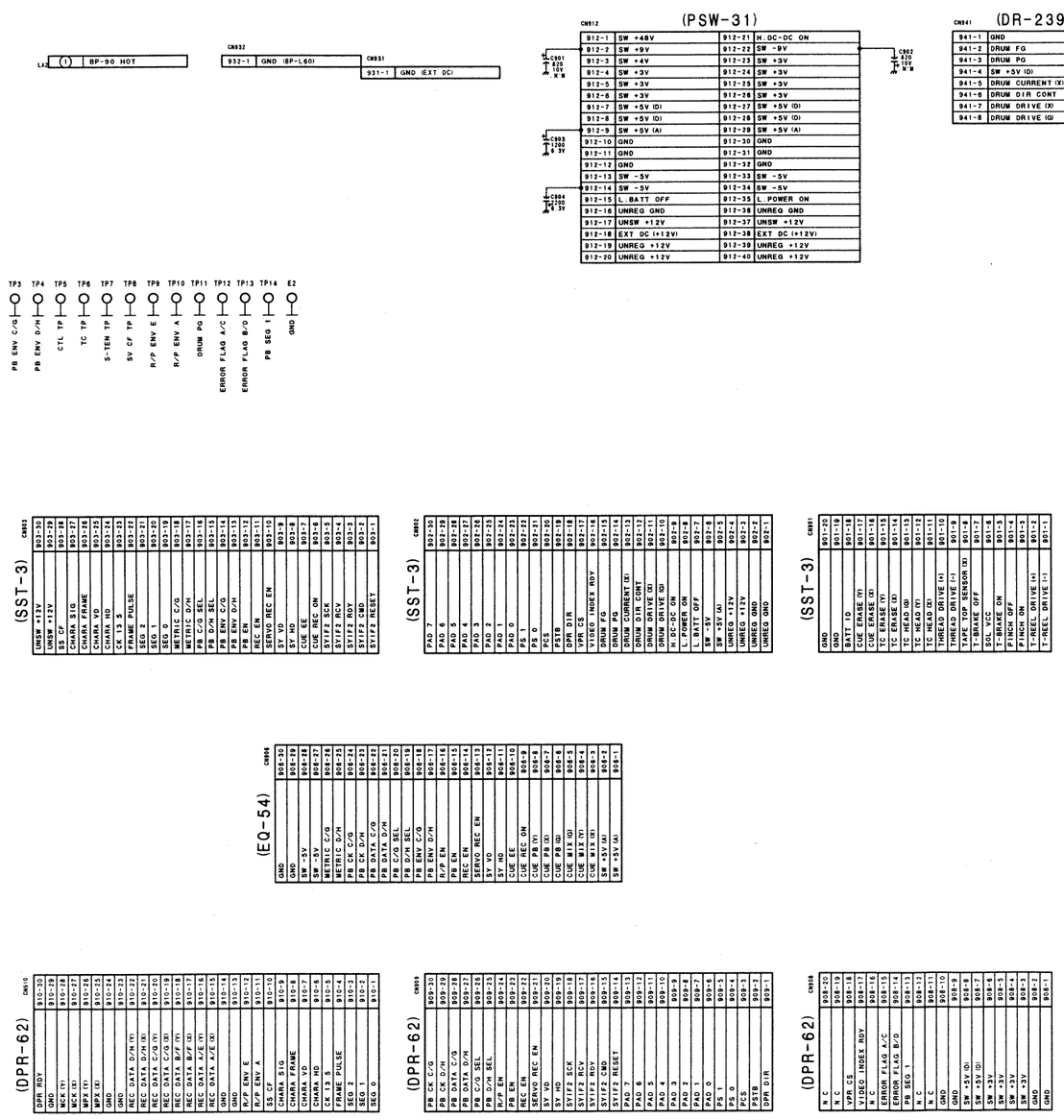

MOTHER BOARD
MB-601
BOARD NO. 1-657-803-11
LOT NO. 409-
B-¥DVW250-MB601-11

DVW-250 (J)
DVW-250 (UC)
DVW-250P (SY)

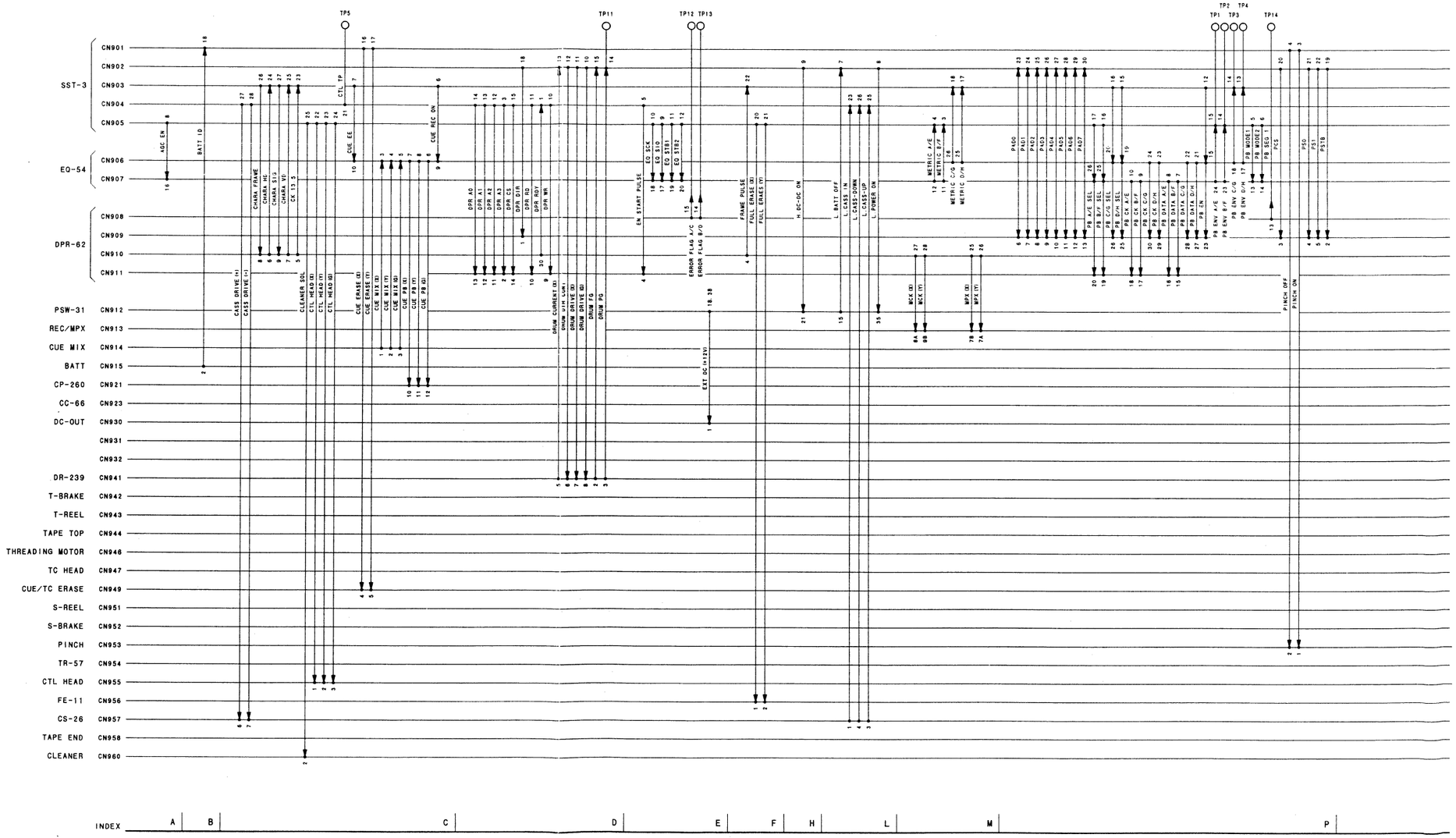

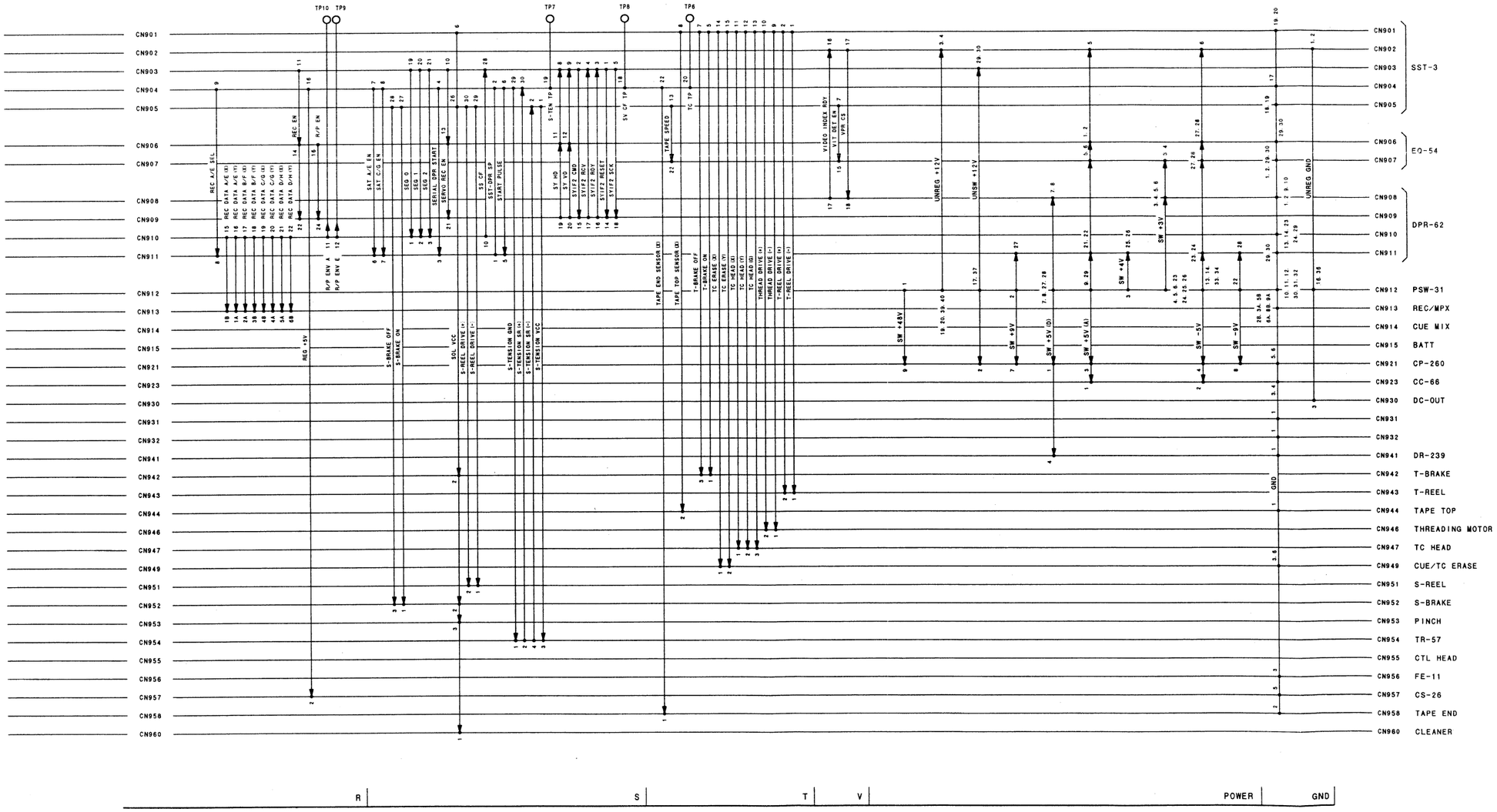

MOTHER BOARD
MB-601
BOARD NO. 1-657-803-11
LOT NO. 409-
B-¥DVW250-MB601-KESSEN-11

DVW-250 (J)
DVW-250 (UC)
DVW-250P (SY)

TR-57 (1-638-710-11)

PD1 *A1

* : Soldering Side

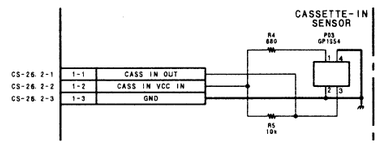

CASSETTE UP/DOWN DETECTOR
CS-25
BOARD NO. 1-638-701-12
LOT NO. 409-
B-¥DVW250-CS25-S/M

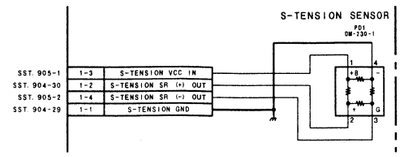

S-TENSION DETECTOR
TR-57
BOARD NO. 1-638-710-11
LOT NO. 409-
B-¥DVW250-TR57-S/M

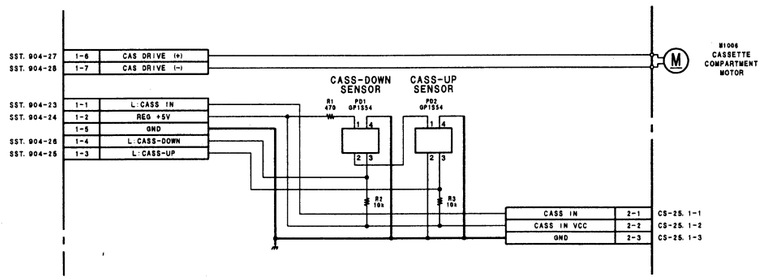

CASSETTE UP/DOWN DETECTOR
CS-26
BOARD NO. 1-638-702-11
LOT NO. 409-
B-¥DVW250-CS26-S/M

DVW-250 (J)
DVW-250 (UC)
DVW-250P (SY)

PSW-31A (1-657-796-11)

CN601	A2
CN602	A2
CN603	F1
D1	A1
D2	*D2
D3	*A1
D4	*G2
D5	*F2
D6	*D2
D7	*B2
D8	*F3
D9	*F2
D10	*D2
D11	*C2
F1	D1
L1	A2
L2	C3
L3	E3
L4	D2
L5	F3
L6	F2
L7	E2
L8	C1
L9	E1
L10	C2
L11	G2
L12	F2
L13	B1
Q1	*B2
Q2	B1
Q3	E2
Q4	*D3
Q5	C2
Q6	*B2
Q7	F2
Q8	*F3
Q9	D2
Q10	F2
Q11	F2
Q12	B2

* : Soldering Side

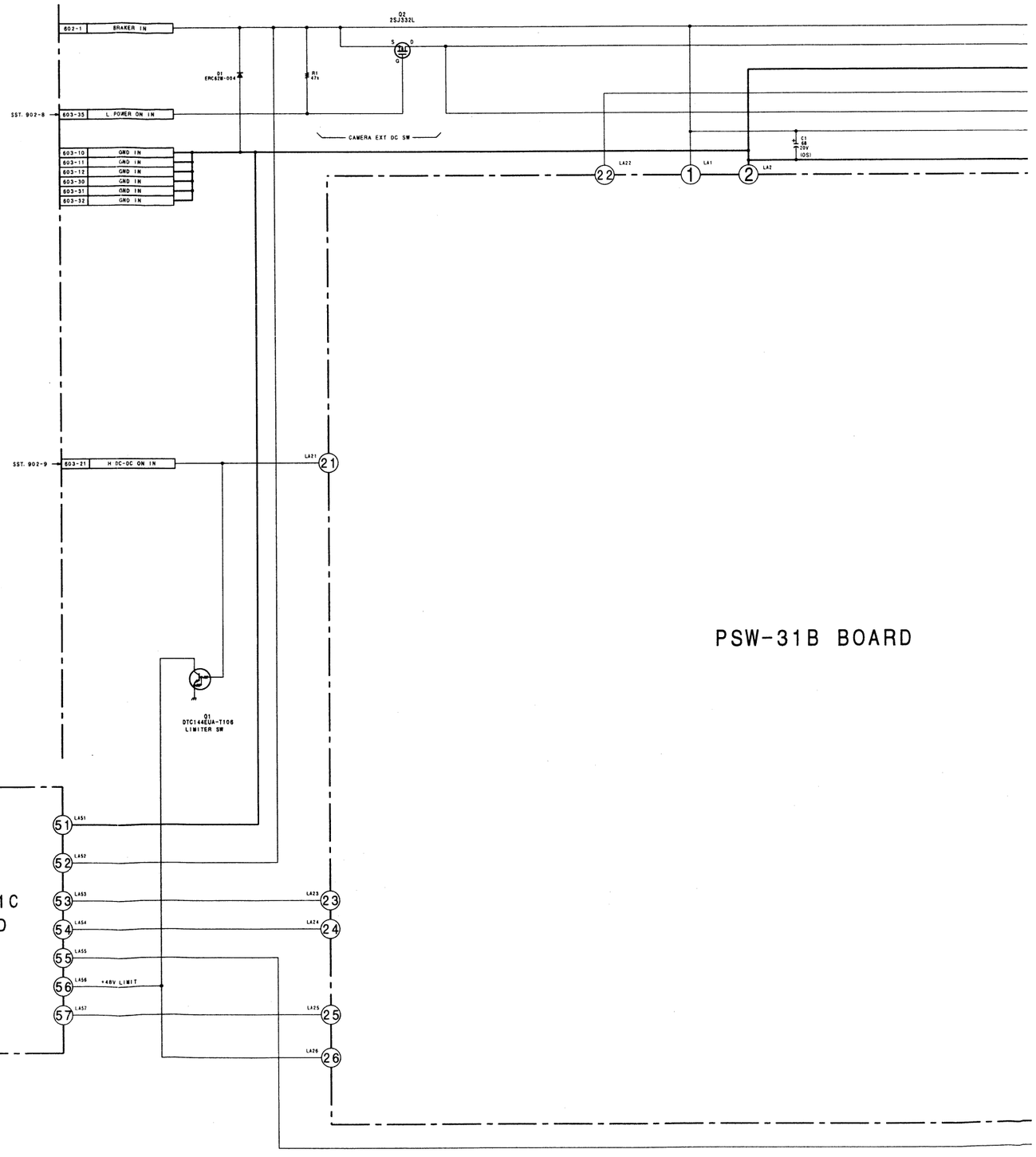

Section 4
Semiconductor Pin Assignments

ここに記載されている半導体は，それぞれの機能を等価的に表したものです。 なお，互換性のない型名を併記していることがありますので，部品を交換するときは，Spare Partsの章を参照してください。
等価回路はＩＣメーカーのデータブックに従いました。

Semiconductors of which functions are equivalent are described here. For parts replacement, refer to the section of Spare Parts in this manual. The circuit diagram of each IC is obtained from the IC data book published by the manufacturer.

Diode ..... PAGE

1SS119 4-2
1SS184 4-2
1SS193 4-2
1SS226 4-2
1SS303 4-2
1SS83 4-2
1SS97 4-2
BR5505S;RED 4-2
CL-150R-CD;RED 4-2
DA204U 4-2
DA227 4-2
DAN202U 4-2
DAP202U 4-2
DTZ12 4-2
EBR3402S;RED 4-2
EC10QS-04 4-2
ERA85 4-2
ERB83 4-2
ERC62M-004 4-2
RB420D 4-2
RB715F 4-2
RB717F 4-2
RD ? ?M-B 4-2
RD10M 4-2
RD11M-B1 4-2
RD15M-B1 4-2
RD2.0ESB2 4-2
RD3.3M-B 4-2
RD3.6UH 4-2
RD3.9UH 4-2
RD4.7UH 4-2
RD5.6SB 4-2
RD6.8M-B 4-2
SB007-03CP 4-2
SB007T03Q 4-2
SLP162B;RED 4-2
TLR224;RED 4-2

Transistor ..... PAGE

2SA1162G 4-2
2SA1330 4-2
2SA1610 4-2
2SA1611 4-2
2SA1808 4-2
2SB1123 4-2
2SB1202FA 4-2
2SB1295 4-2
2SB798 4-2
2SC1623 4-2
2SC2982C 4-2
2SC3356 4-2
2SC3360 4-2
2SC3735 4-2
2SC4176 4-2
2SC4177 4-2
2SC4177-L6 4-2
2SC4213A 4-2
2SC4213B 4-2
2SD1328 4-2
2SD1621 4-2
2SD1623 4-2
2SD1935 4-2
2SD2114K 4-2
2SD596 4-2
2SJ132 4-3
2SJ176 4-3
2SJ187 4-3
2SJ332L 4-3
2SK1483 4-3
2SK1949L 4-4
2SK2084L 4-4
2SK2151 4-4
2SK2205 4-4
2SK711 4-4
2SK738 4-4
2SK739-Z 4-4
2SK852-X2 4-4
2SK94-X4 4-4
DTA124EUA 4-3
DTA144EUA 4-3
DTA144WU 4-3
DTC124EUA 4-3
DTC124XKA 4-3
DTC143TKA 4-3
DTC144ESA 4-4
DTC144EUA 4-3
DTC144WU 4-3
FMY3 4-3
IMZ1 4-3
SI-9430DY 4-4
UMW1 4-3

Others ..... PAGE

DM-230 4-4
GP-1A06 4-4
GP1S54 4-4
PR-11 4-4

IC ..... PAGE

74AC04SJ 4-5
74AC08SJ 4-5
74AC11SJ 4-5
74AC139SJ 4-5
74AC32SJ 4-5
74AC541SJ 4-6
74AC74SJ 4-6
AK5390-VS 4-6
CAT93C46KI 4-7
CLC505AJE 4-7
CX23065A 4-7
CXA1450M 4-7
CXA1451M 4-7
CXA1805Q 4-8
CXA3034Q 4-9
CXD1095Q 4-10
CXD1171M 4-8
CXD1175AM 4-11
CXD2202Q 4-13
CXD2302Q 4-11
CXD2306Q 4-12
CXD2310R 4-12
CXD303-101Q 4-15
CXD304-106Q 4-16
CXD306-138Q 4-17
CXD8280AQ 4-18
CXD8281Q 4-19
CXD8382BQ 4-21
CXD8384Q 4-23
CXD8385Q 4-25
CXD8386AQ 4-20
CXD8804Q 4-27
CXD8805Q 4-28
CXD8815Q 4-29
CXD8817Q 4-30
CXD8819AQ 4-31
CXD8821Q 4-33
CXD8854Q 4-34
CXK1203AR 4-34
CXK58257AM-10L 4-35
DS1000Z-100 4-38
HD14053BFP 4-35
HD6415108RF10 4-37
HM53051FP-60 4-35
HM6264ALFP-12 4-36
HM62W8127HJP-27 ... 4-36
HM62W8127HJP-35 ... 4-36
HM62W9127HJP-35 ... 4-39
IDT6116SA25SO 4-39
LA7205M 4-40
LM1881M 4-40
LM2903PS 4-40
LM324NS 4-40
LM358D 4-40
LM358PS 4-40
LT1180ACS 4-40
LT1227CS8 4-41
LTC1337CS 4-41
LTC491CS 4-41
M27C4002-10F1 4-41
M62352GP 4-42
MB3761PF 4-42
MB88306PF 4-42
MB88323A-PF-K2 4-43
MC14051BF 4-42
MC14052BF 4-43
MC14577CF 4-44
MC1496M 4-43
MC34184M 4-44
MC68340FE16B 4-45
MC68340FE16C 4-45
MC74HC112F 4-44
MC74HC541N 4-5
MSM6524GS-VK 4-47
MSM6660-01GS-V1K 4-44
NJM062M 4-44
NJM072BM 4-48
NJM2406F 4-48
NJM2903M 4-40
NJM2904M 4-48
NJM3403AM 4-48
NJM360M 4-48
NJM386BM 4-48
NJM431U 4-48
NJM4556M 4-48
NJM4565M-A 4-49
NJM4580E 4-49
NJM5534M 4-49
NJM78L05A 4-49
NJM78L05UA 4-49
NJM79L05UA 4-49
PCM69U-J 4-49
REF-03GS 4-50
S-8052-ANY-NH 4-50
S-8052ALY 4-50
S-8054HN 4-50
S-81250HG-RD 4-51
SBX1601A 4-50
SBX1602A 4-50
SC7S04F 4-52
SC7S32F 4-52
SM5843AS1 4-52
SN74HC00ANS 4-52
SN74HC04ANS 4-5
SN74HC05ANS 4-53
SN74HC08ANS 4-5
SN74HC10ANS 4-53
SN74HC151ANS 4-53
SN74HC165ANS 4-53
SN74HC175ANS 4-53
SN74HC245ANS 4-54
SN74HC32ANS 4-5
SN74HC374ANS 4-54
SN74HC4040ANS 4-54
SN74HC541ANS 4-6
SN74HC74ANS 4-6
SN74HCT04ANS 4-5
SN74HCT244ANS 4-51
SN74HCT245ANS 4-54
SN74HCT32ANS 4-5
SN74HCT541ANS 4-6
SN74LS221NS 4-54
SN74LVT245NS 4-54
SRM2016M10 4-39
T6963C 4-55
TA7291F 4-56
TC35080P 4-56
TC4053BFS 4-35
TC4S66F 4-56
TC4S69F 4-52
TC4S81F 4-51
TC4SU69F 4-52
TC4W53F 4-51
TC4W53FU 4-51
TC4W66FU 4-56
TC74HC123AF 4-57
TC74HC221AF 4-57
TC74HC688AF 4-57
TC74HCT04AF 4-5
TC74HCT540AF 4-57
TC74VHC00F 4-52
TC74VHC00FS 4-52
TC74VHC04FS 4-5
TC74VHC08FS 4-5
TC74VHC123AF 4-57
TC74VHC123AFS 4-57
TC74VHC132FS 4-58
TC74VHC138FS 4-58
TC74VHC157FS 4-58
TC74VHC163F 4-58
TC74VHC164F 4-59
TC74VHC165FS 4-53
TC74VHC174F 4-59
TC74VHC175FS 4-53
TC74VHC21F 4-59
TC74VHC221AF 4-57
TC74VHC240F 4-59
TC74VHC244F 4-51
TC74VHC244FS 4-51
TC74VHC245F 4-54
TC74VHC245FS 4-54
TC74VHC27FS 4-59
TC74VHC32F 4-5
TC74VHC32FS 4-5
TC74VHC368FS 4-60
TC74VHC374FS 4-54
TC74VHC541F 4-6
TC74VHC541FS 4-6
TC74VHC574F 4-60
TC74VHC574FS 4-60
TC74VHC74F 4-6
TC74VHC74FS 4-6
TC74VHC86F 4-60
TC74VHCT244FS 4-51
TC74VHCT541FS 4-6
TC7S08F 4-51
TC7S86F 4-51
TC7S86FU 4-51
TC7SH32FU 4-52
TC7W04FU 4-60
TC7W08FU 4-60
TC7W74FU 4-61
TE7751 4-61
TL062CPW 4-44
TL1451ACNS 4-62
TL1451ACPW 4-62
TL431CML 4-62
TL7705ACPS 4-62
TLC272CPW 4-62
TLC274CPW 4-62
UPC1663G 4-62
UPC311G2 4-62
UPC319G2 4-63
UPD42101G-3 4-63
UPD434008LE-20 4-63
UPD485505G-35 4-63
UPD75004GB-3B8 4-64
UPD78P014GC-A88 ... 4-65

DIODE

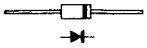

1SS119
1SS83
1SS97
ERA85
ERB83

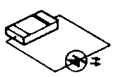

CL-150R-CD;RED

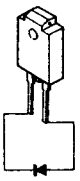

ERC62M-004

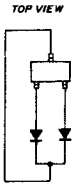

1SS184
DAN202U
RB715F

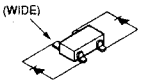

DA227

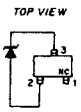

RD ? ?M-B
RD10M
RD11M-B1
RD15M-B1
RD3.3M-B
RD3.6UH
RD3.9UH
RD4.7UH
RD6.8M-B

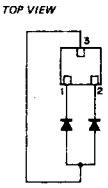

DAP202U

1SS193
RB420D
SB007-03CP

RD2.0ESB2

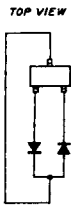

1SS226
DA204U
SB007T03Q

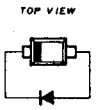

DTZ12

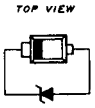

RD5.6SB

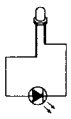

EBR3402S;RED

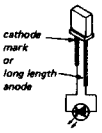

SLP162B;RED

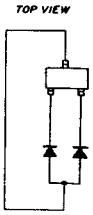

1SS303
RB717F

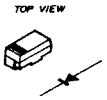

EC10QS-04

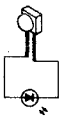

TLR224;RED

BR5505S;RED

TRANSISTOR

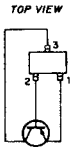

2SA1162G
2SA1330
2SA1610
2SA1611
2SA1808
2SB1295

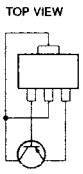

2SB1123
2SB798

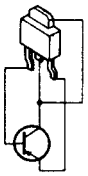

2SB1202FA

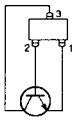

2SC1623
2SC3356
2SC3360
2SC3735
2SC4176
2SC4177
2SC4177-L6
2SC4213A
2SC4213B
2SD1328
2SD1935
2SD2114K
2SD596

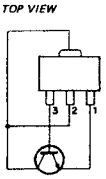

2SC2982C
2SD1621
2SD1623

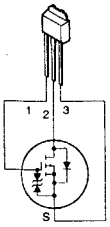

2SJ332L

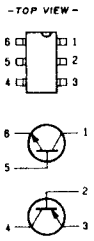

IMZ1

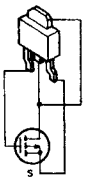

2SJ132

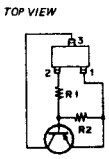

DTA124EUA(R1=22K, R2=22K)
DTA144EUA(R1=47K, R2=47K)
DTA144WU(R1=47K, R2=22K)

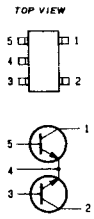

UMW1

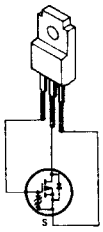

2SJ176

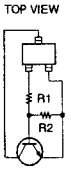

DTC124EUA(R1=22K, R2=22K)
DTC143TKA(R1=4.7K, R2=OPEN)
DTC144EUA(R1=47K, R2=47K)
DTC144WU(R1=47K, R2=22K)

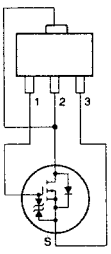

2SJ187

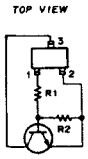

DTC124XKA(R1=22K, R2=47K)

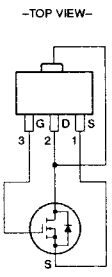

2SK1483

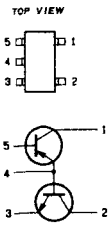

FMY3

Others

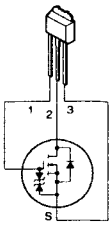

2SK1949L
2SK2084L

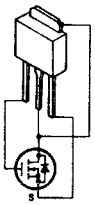

2SK738

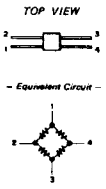

DM-230

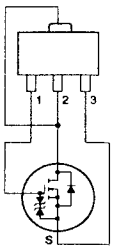

2SK2151

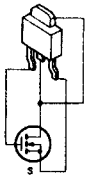

2SK739-Z

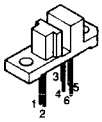

GP-1A06

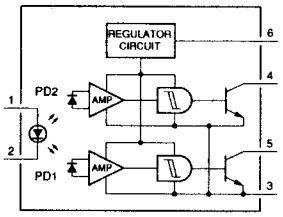

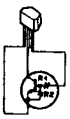

DTC144ESA (R1=47K, R2=47K)

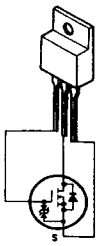

2SK2205

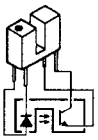

GP1S54

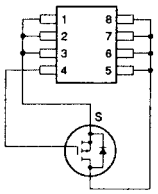

SI-9430DY

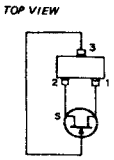

2SK711
2SK852-X2
2SK94-X4

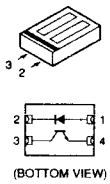

PR-11

IC

74AC04SJ (NS) FLAT PACKAGE
SN74HC04ANS (TI) FLAT PACKAGE
SN74HCT04ANS (TI) FLAT PACKAGE
TC74HCT04AF (TOSHIBA) FLAT PACKAGE
TC74VHC04FS (EL) (TOSHIBA) FLAT PACKAGE (SMALL)

C-MOS HEX INVERTERS
– TOP VIEW –

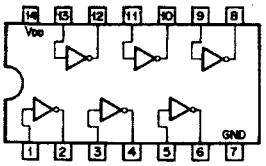

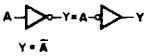

Y = $\overline{A}$

A	Y
0	1
1	0

0 ; LOW LEVEL
1 ; HIGH LEVEL

NOTE :

TYPE	VDD
74HCT04 TYPE	+ 5V
TC74AC04 TYPE TC74VHC04 TYPE	+ 2 to + 5.5V
74ACT04 TYPE	+ 4.5 to + 5.5V
OTHER TYPES	+ 2 to + 6V

74AC08SJ (NS) FLAT PACKAGE
SN74HC08ANS (TI) FLAT PACKAGE
TC74VHC08FS (EL) (TOSHIBA) FLAT PACKAGE (SMALL)

C-MOS QUAD 2-INPUT AND GATES
– TOP VIEW –

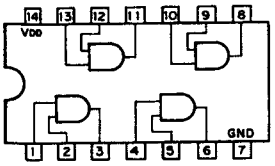

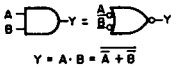

Y = A·B = $\overline{\overline{A}+\overline{B}}$

A	B	Y
0	0	0
0	1	0
1	0	0
1	1	1

0 ; LOW LEVEL
1 ; HIGH LEVEL

NOTE :

TYPE	VDD
TC74AC08 TYPE MC74ACT08M	+ 2 to + 5.5V
TC40H	+ 2 to + 8V
OTHER TYPES	+ 2 to + 6v

74AC11SJ (NS) FLAT PACKAGE

C-MOS 3-INPUT POSITIVE-AND GATE
– TOP VIEW –

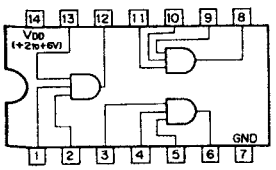

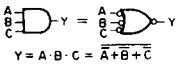

Y = A·B·C = $\overline{\overline{A}+\overline{B}+\overline{C}}$

A	B	C	Y
0	0	0	0
0	0	1	0
0	1	0	0
0	1	1	0
1	0	0	0
1	0	1	0
1	1	0	0
1	1	1	1

0 ; LOW LEVEL
1 ; HIGH LEVEL

NOTE :

TYPE	VDD
TC74VHC11	+2V to +5.5V
OTHER TYPES	+2V to +6V

74AC139SJ (NS) FLAT PACKAGE

C-MOS DUAL 2-TO-4 DECODER/DEMULTIPLEXER
– TOP VIEW –

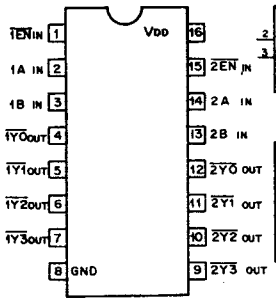

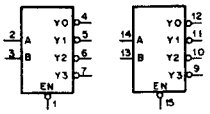

INPUTS			OUTPUTS			
EN	B	A	Y3	Y2	Y1	Y0
0	0	0	1	1	1	0
0	0	1	1	1	0	1
0	1	0	1	0	1	1
0	1	1	0	1	1	1
1	X	X	1	1	1	1

0 ; LOW LEVEL
1 ; HIGH LEVEL
X ; DON'T CARE

NOTE :

TYPE	VDD
HC	+2 to +6V
AC/VHC	+2 to +5.5V
HCT/ACT	+5V

74AC32SJ (NS) FLAT PACKAGE
SN74HC32ANS (TI) FLAT PACKAGE
SN74HCT32ANS (TI) FLAT PACKAGE
TC74VHC32F (TOSHIBA) FLAT PACKAGE
TC74VHC32FS (EL) (TOSHIBA) FLAT PACKAGE (SMALL)

C-MOS QUAD 2-INPUT OR GATES
– TOP VIEW –

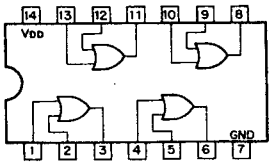

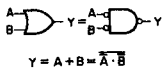

Y = A+B = $\overline{\overline{A}\cdot\overline{B}}$

A	B	Y
0	0	0
0	1	1
1	0	1
1	1	1

0:LOW LEVEL
1:HIGH LEVEL

NOTE :

TYPE	VDD
AC/VHC	+2 to +5.5V
HC	+2 to +6V

74AC541SJ (NS) FLAT PACKAGE
MC74HC541N (MOTOROLA)
SN74HC541ANS (TI) FLAT PACKAGE
SN74HCT541ANS (TI) FLAT PACKAGE
TC74VHC541F (TOSHIBA) FLAT PACKAGE
TC74VHC541FS (EL) (TOSHIBA) FLAT PACKAGE (SMALL)
TC74VHCT541FS (TOSHIBA) FLAT PACKAGE

C-MOS BUFFERS AND LINE DRIVERS WITH 3-STATE OUTPUTS
– TOP VIEW –

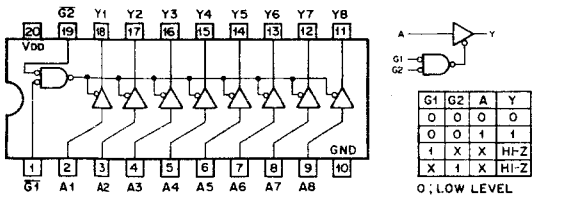

G1	G2	A	Y
0	0	0	0
0	0	1	1
1	X	X	HI-Z
X	1	X	HI-Z

0 ; LOW LEVEL
1 ; HIGH LEVEL
X ; DON'T CARE
HI-Z ; HIGH IMPEDANCE

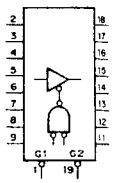

NOTE :

TYPE	Vᴅᴅ
AC/VHC	+2 to +5.5V
HC	+2 to +6V
ABT/ACT/BCT/HCT/VHCT	+5V

AK5390-VS (ASAHI KASEI) FLAT PACKAGE

18-BIT STEREO A-D CONVERTER
– TOP VIEW –

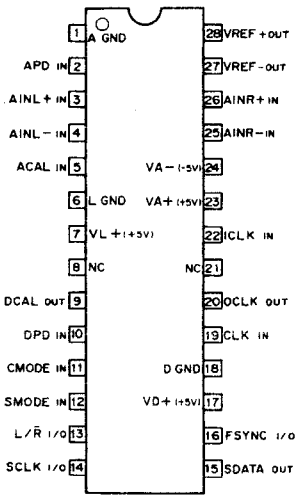

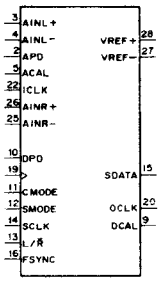

INPUT
ACAL ; ANALOG CALIBRATION
(H : AGND)
(L : ANALOG SIGNAL INPUT = AINL, AINR)
AINL + ; CHANNEL L ANALOG POSITIVE INPUT
AINL – ; CHANNEL L ANALOG NEGATIVE INPUT
AINR + ; CHANNEL R ANALOG POSITIVE INPUT
AINR – ; CHANNEL R ANALOG NEGATIVE INPUT
APD ; POWER DOWN FOR ANALOG SECTION
CLK ; MASTER CLOCK
(CMODE = H : 384fs)
(CMODE = L : 256fs)
CMODE ; MASTER CLOCK SELECT
(L : CLK = 256fs, 12.288 MHz @fs = 48 kHz
(H : CLK = 384fs, 18.432 MHz @fs = 48 kHz
DPD ; POWER DOWN FOR DIGITAL SECTION
ICLK ; 128fs CLOCK
SMODE ; INTERFACE CLOCK SELECT
(L : SUB MODE)
(H : MASTER MODE)

OUTPUT
DCAL ; DIGITAL CALIBRATION
OCLK ; 128fs CLOCK
SDATA ; SERIAL DATA
VREF + ; REFERENCE POSITIVE VOLTAGE (+ 3.68 V)
VREF – ; REFERENCE NEGATIVE VOLTAGE (– 3.68 V)

INPUT/OUTPUT
FSYNC ; FRAME SYNC CLOCK
L/R ; INPUT CHANNEL SELECT
(SUB MODE : fs CLK INPUT)
(MASTER MODE : fs CLK OUTPUT)
SCLK ; SERIAL DATA CLOCK
(SUB MODE : 64fs CLK INPUT)
(MASTER MODE : 64fs CLK OUTPUT)

74AC74SJ (NS) FLAT PACKAGE
SN74HC74ANS (TI) FLAT PACKAGE
TC74VHC74F (TOSHIBA) FLAT PACKAGE
TC74VHC74FS (EL) (TOSHIBA) FLAT PACKAGE (SMALL)

C-MOS DUAL D-TYPE FLIP-FLOPS WITH DIRECT SET/RESET
– TOP VIEW –

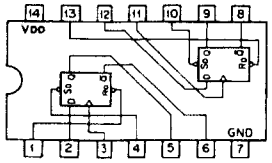

INPUTS				OUTPUTS	
$\overline{S_D}$	$\overline{R_D}$	CK	D	Qn+1	$\overline{Q_{n+1}}$
0	1	X	X	1	0
1	0	X	X	0	1
0	0	X	X	1	1
1	1	↑	1	1	0
1	1	↑	0	0	1
1	1	0	X	Qn	$\overline{Q_n}$

0 ; LOW LEVEL
1 ; HIGH LEVEL
X ; DON'T CARE

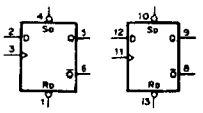

NOTE :

TYPE	Vᴅᴅ
HCT/ACT	+5V
TC74AC/VHC	+2 to +5.5V
OTHERS	+2 to +6V

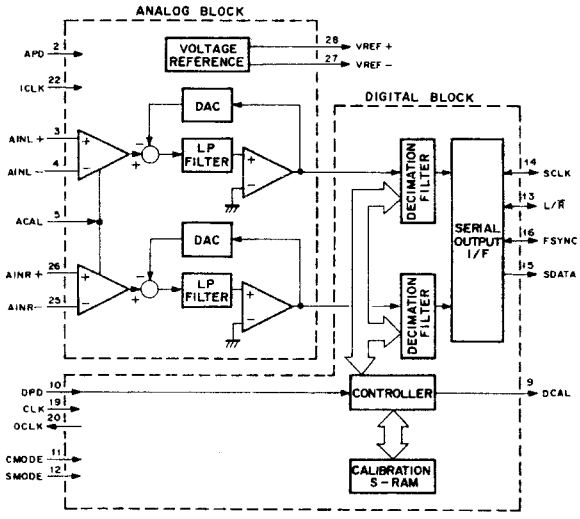

CAT93C46KI

– TOP VIEW –

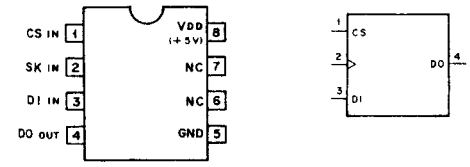

INPUT
CS ; CHIP SELECT
DI ; SERIAL DATA INPUT
SK ; SERIAL CLOCK

OUTPUT
DO ; SERIAL DATA OUTPUT

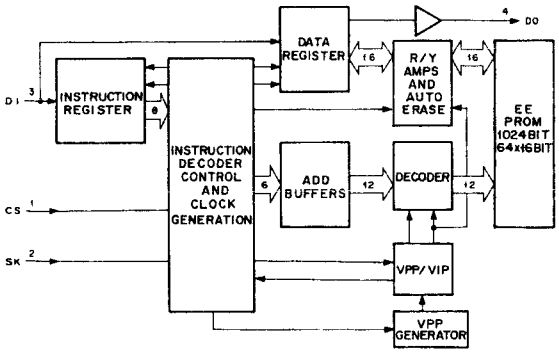

CLC505AJE (COMLINEAR) FLAT PACKAGE

OPERATIONAL AMPLIFIER
– TOP VIEW –

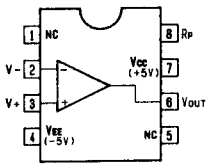

CX23065A (SONY)

N-MOS PHASE COMPARATOR WITH INVERSION AMPLIFIER
– PRINTED SIDE VIEW –

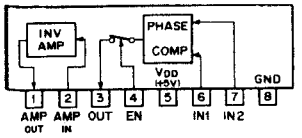

EN	OUT
1	ACTIVE
0	HIGH IMPEDANCE

1; HIGH LEVEL
0; LOW LEVEL

TIMING CHART

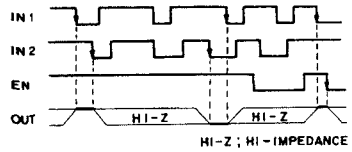

HI-Z ; HI-IMPEDANCE

CXA1450M (SONY) FLAT PACKAGE

VIDEO SIGNAL SWITCH
– TOP VIEW –

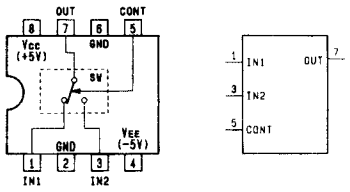

CXA1451M (SONY)

WIDEBAND VIDEO SWITCH
– TOP VIEW –

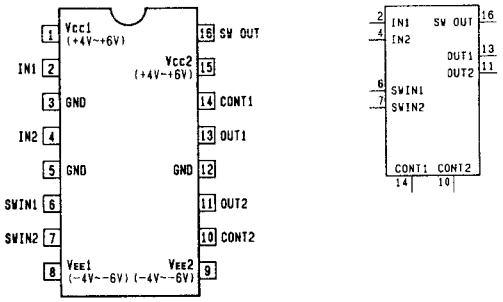

INPUT
CONT1, 2 ; POWER SAVE CONTROL PIN OF DRV.1 AND DRV.2
IN1, 2 ; 1/2-CHANNEL INPUT PIN
SWIN1, 2 ; IN1/IN2 PINS SWITCH CONTROL PIN

OUTPUT
OUT1, 2 ; OUTPUT PIN OF DRV.1/2
SWOUT ; OUTPUTS IN1 PIN OR IN2 PIN WHICH HAS BEEN SELECTED BY SWITCH.

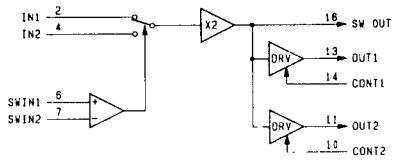

CXA1805Q (SONY)

PHASE LOCKED LOOP CIRCUIT
– TOP VIEW –

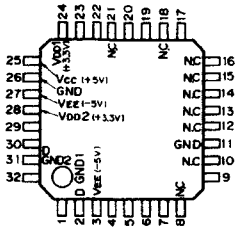

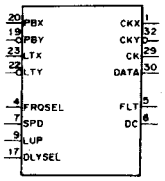

PIN No.	I/O	SIGNAL	PIN No.	I/O	SIGNAL
1	O	CKX	17	I	DLYSEL
2	–	D GND1	18	–	N.C
3	–	V_{EE}	19	I	PBY
4	I	FRQSEL	20	I	PBX
5	–	FLT	21	–	N.C
6	–	DC	22	I	LTY
7	I	SPD	23	I	LTX
8	–	N.C	24	–	V_{DD1}
9	I	LUP	25	–	V_{CC}
10	–	N.C	26	–	GND
11	–	GND	27	–	V_{EE}
12	–	N.C	28	–	V_{DD2}
13	–	N.C	29	O	CK
14	–	N.C	30	O	DATA
15	–	N.C	31	–	D GND2
16	–	N.C	32	O	CKY

INPUT
DLYSEL ; EDGE PULSE WIDTH SELECT
(H ≒ 2.5 ns, L ≒ 5 ns)
FRQSEL ; VCO OSCILLATION FREQUENCY SELECT
LTX ; LATCH INPUT (+)
LTY ; LATCH INPUT (–)
LUP ; PLL PULL-IN TIME CHANGE
PBX ; PLL INPUT (+)
PBY ; PLL INPUT (–)
SPD ; DETERMINATION OF FREE RUN FREQUENCY

OUTPUT
CK ; CLOCK OUTPUT
CKX ; CLOCK OUTPUT (+)
CKY ; CLOCK OUTPUT (–)
DATA ; DATA OUTPUT

OTHER
DC ; CONNECT DECOUPLING FOR BIAS CIRCUIT
FLT ; CONNECT CONSTANT OF LOOP FILTER

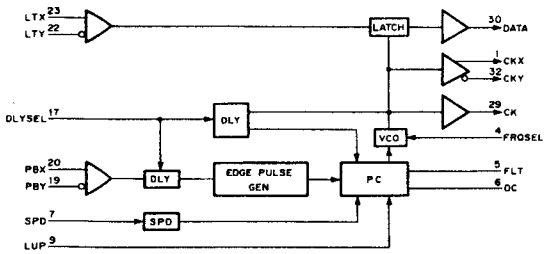

CXD1171M (SONY) FLAT PACKAGE

C-MOS 8-BIT D/A CONVERTER
– TOP VIEW –

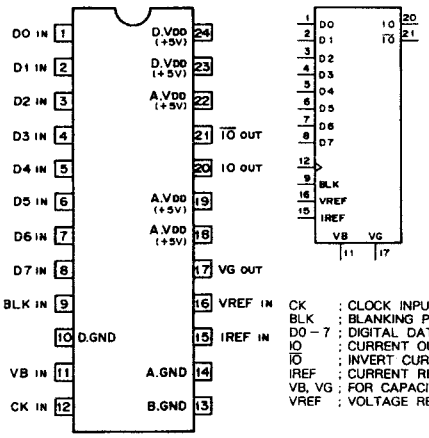

CK ; CLOCK INPUT
BLK ; BLANKING PULSE INPUT
DO – 7 ; DIGITAL DATA INPUT
IO ; CURRENT OUTPUT
$\overline{IO}$; INVERT CURRENT OUTPUT
IREF ; CURRENT REFERENCE INPUT
VB, VG ; FOR CAPACITOR
VREF ; VOLTAGE REFERENCE INPUT

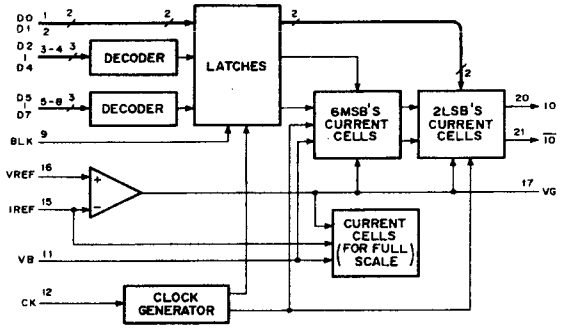

CXA3034Q (SONY)

BYPOLAR/SILICON MONOLITHIC IC
– TOP VIEW –

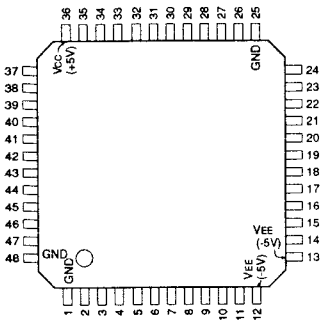

(VDD=+5V)

PIN No.	I/O	SIGNAL	PIN No.	I/O	SIGNAL	PIN No.	I/O	SIGNAL	PIN No.	I/O	SIGNAL
1	–	GND	13	–	VEE (-5V)	25	–	GND	37	O	VMON
2	O	VRB1	14	O	VBGR	26	O	EQOX	38	I	PBSW
3	O	VRR	15	I	RDLY	27	O	EQOY	39	I	VTH
4	I	PBIX	16	I	RREF	28	O	DTOX	40	I	ENVI
5	I	PBIY	17	I	RLPF	29	O	DTOY	41	O	ENVO
6	I	REX	18	I	PBEN	30	I	CF2A	42	O	MON2
7	I	REY	19	I	EQEN	31	I	CF2B	43	O	MON1
8	O	PBOX	20	I	GAIN	32	I	CF1A	44	O	MON0
9	O	PBOY	21	I	OFS	33	I	CF1B	45	I	VRB2
10	I	EQIX	22	O	QFBX	34	I	CF0A	46	I	EFLX
11	I	EQIY	23	O	QFBY	35	I	CF0B	47	I	EFLY
12	–	VEE (-5V)	24	I	TSR	36	–	VCC (+5V)	48	–	GND

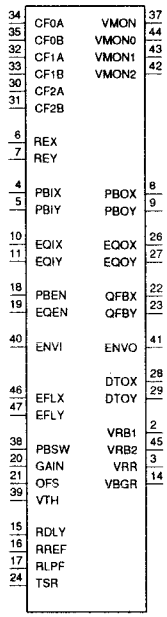

INPUT

CF0A,0B,1A,1B,2A,2B	; 3TAP FIR FILTER COEFFICIENT INPUT
EFLX,EFLY	; ENVELOPE DETECTOR DRIVE (X,Y)
ENVI	; AGC VOLTAGE
EQIX,EQIY	; EQUALIZER DRIVE (X,Y)
EQEN	; ENABLE INPUT
GAIN	; GAIN (EQUALIZER)
OFS	; OFF SET CONTROL (DC SERVO FEEDBACK INPUT)
PBEN	; ENABLE INPUT
PBIX,PBIY	; PREAMP DRIVE (X,Y)
PB SW	; 3TAP FIR FILTER COEFFICIENT SELECT
RDLY	; ACTIVE DELAY BIAS RESISTER
REX,REY	; PREAMP GAIN SELECT (X,Y) (NORMALLY SHORT)
RLPF	; ACTIVE LPF BIAS RESISTER
RREF	; ACTIVE DELAY/LPF BIAS RESISTER
TSR	; CHIP THERMAL DETECT RESISTER
VTH	; AGC GAIN LIMITTER

OUTPUT

DTOX,DTOY	; ZERO CROSS CONPARATOR ECL DRIVE (X,Y)
ENVO	; ENVELOPE DETECTOR
EQOX,EQOY	; EQUALIZER DRIVE (X,Y)
PBOX,PBOY	; PREAMP DRIVE (X,Y)
QFBX,QFBY	; QFB FILTER (X,Y)
VBGR	; BAND GAP REFERENCE VOLTAGE
VMON	; MONITOR OUT REFERENCE VOLTAGE
VMON0	; MONITOR OUT (ACTIVE LPF)
VMON1	; MONITOR OUT (ACTIVE DELAY1)
VMON2	; MONITOR OUT (ACTIVE DELAY2)
VRB1	; PREAMP REFERENCE VOLTAGE
VRB2	; ENVEROPE DETECTOR REFERENCE VOLTAGE
VRR	; EQUALIZER REFERENCE VOLTAGE

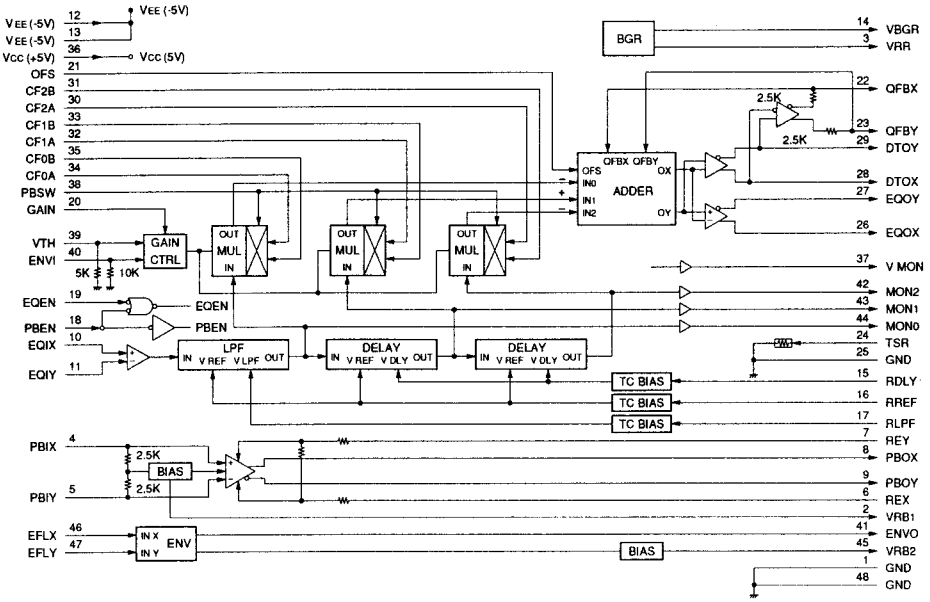

CXD1095Q (SONY) FLAT PACKAGE

C-MOS I/O PORT EXPANDER
– TOP VIEW –

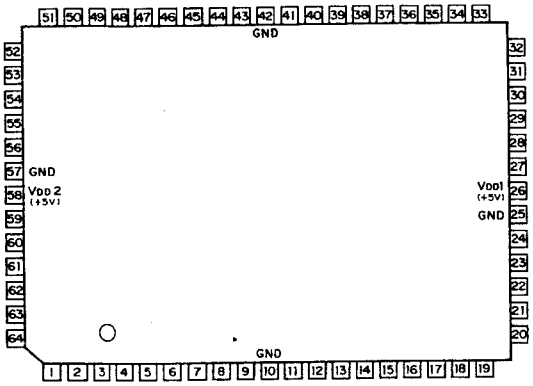

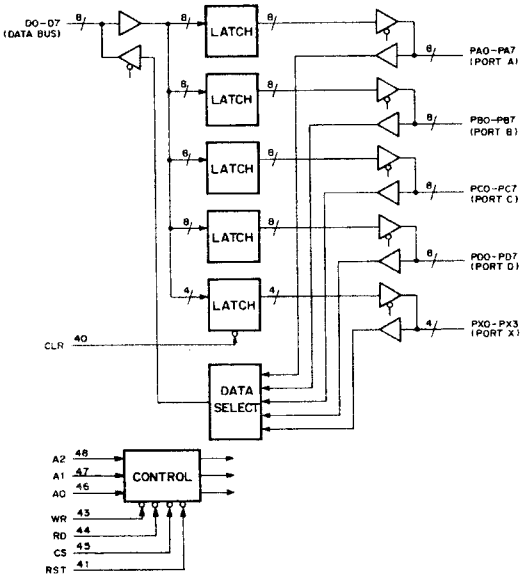

PIN NO.	IN	OUT	SYMBOL	PIN NO.	IN	OUT	SYMBOL	PIN NO.	IN	OUT	SYMBOL	PIN NO.	IN	OUT	SYMBOL
1			NC	17	O	O	PC6	33			NC	49	O	O	PX0
2			NC	18	O	O	PC7	34			NC	50	O	O	PX1
3	O	O	PB1	19			NC	35	O	O	D3	51			NC
4	O	O	PB2	20	O	O	PD0	36	O	O	D4	52	O	O	PX2
5	O	O	PB3	21	O	O	PD1	37	O	O	D5	53	O	O	PX3
6	O	O	PB4	22	O	O	PD2	38	O	O	D6	54	O	O	PA0
7	O	O	PB5	23	O	O	PD3	39	O	O	D7	55	O	O	PA1
8	O	O	PB6	24	O	O	PD4	40	O		CLR	56	O	O	PA2
9	O	O	PB7	25			GND	41	O		RST	57			GND
10			GND	26	O		VDD(+5V)	42			GND	58	O		VDD(+5V)
11	O	O	PC0	27	O	O	PD5	43	O		WR	59	O	O	PA3
12	O	O	PC1	28	O	O	PD6	44	O		RD	60	O	O	PA4
13	O	O	PC2	29	O	O	PD7	45	O		CS	61	O	O	PA5
14	O	O	PC3	30	O	O	D0	46	O		A0	62	O	O	PA6
15	O	O	PC4	31	O	O	D1	47	O		A1	63	O	O	PA7
16	O	O	PC5	32	O	O	D2	48	O		A2	64	O	O	PB0

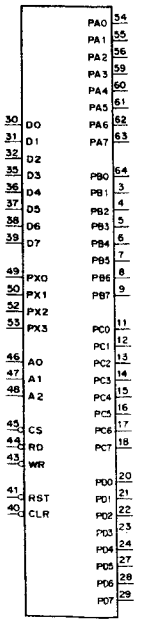

CS	RD	WR	A2	A1	A0	MODE
0	0	1	0	0	0	PORT A → DATA BUS
0	0	1	0	0	1	PORT B → DATA BUS
0	0	1	0	1	0	PORT C → DATA BUS
0	0	1	0	1	1	PORT D → DATA BUS
0	0	1	1	0	0	PORT X → DATA BUS
0	0	1	1	0	1	——
0	0	1	1	1	0	——
0	0	1	1	1	1	——
0	1	0	0	0	0	DATA BUS → PORT A
0	1	0	0	0	1	DATA BUS → PORT B
0	1	0	0	1	0	DATA BUS → PORT C
0	1	0	0	1	1	DATA BUS → PORT D
0	1	0	1	0	0	DATA BUS → PORT X
0	1	0	1	0	1	——
0	1	0	1	1	0	DATA BUS → CTL REG.1
0	1	0	1	1	1	DATA BUS → CTL REG.2
1	X	X	X	X	X	DATA BUS ; HI-Z

0 ; LOW LEVEL
1 ; HIGH LEVEL
X ; DON'T CARE
HI-Z , HIGH IMPEDANCE

D0-D7 ; DATA BUS INPUTS/OUTPUTS
CS ; CHIP SELECT INPUT
RD ; READ STROBE INPUT
WR ; WRITE STROBE INPUT
A0-A2 ; ADDRESS INPUT
RST ; RESET INPUT
CLR ; CLEAR INPUT
PA0-PA7 ; PORT A INPUTS/OUTPUTS
PB0-PB7 ; PORT B INPUTS/OUTPUTS
PC0-PC7 ; PORT C INPUTS/OUTPUTS
PD0-PD7 ; PORT D INPUTS/OUTPUTS
PX0-PX3 ; PORT X INPUTS/OUTPUTS

CXD1175AM (SONY) FLAT PACKAGE

C-MOS 8-BIT 20MSPS VIDEO A/D CONVERTER
– TOP VIEW –

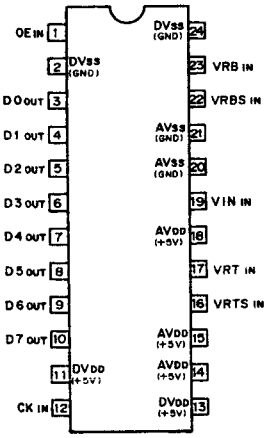

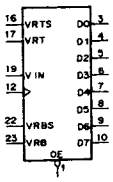

AV_{DD} : ANALOG POWER SUPPLY
AV_{SS} : ANALOG GROUND
CK : CLOCK INPUT
D0 – 7 : DIGITAL DATA OUTPUTS (LSB to MSB)
DV_{DD} : DIGITAL POWER SUPPLY
DV_{SS} : DIGITAL GROUND
OE : OUTPUT ENABLE
(OE = HIGH : HIGH IMPEDANCE)
VIN : ANALOG VOLTAGE INPUT
VRB : BOTTOM REFERENCE VOLTAGE INPUT
VRBS : AS SHORT-CIRCUIT AT VRB.
GENERATES + 0.6V
VRT : TOP REFERENCE VOLTAGE INPUT
VRTS : AS SHORT-CIRCUIT AT VRT.
GENERATES + 2.6V

STEP	INPUT SIGNAL VOLTAGE	DATA OUTPUTS							
		D7	D6	D5	D4	D3	D2	D1	D0
0	0V (VRT)	1	1	1	1	1	1	1	1
1	0.01V	1	1	1	1	1	1	1	0
⋮	⋮	⋮	⋮	⋮	⋮	⋮	⋮	⋮	⋮
127	1.34V	1	0	0	0	0	0	0	0
128	1.35V	0	1	1	1	1	1	1	1
⋮	⋮	⋮	⋮	⋮	⋮	⋮	⋮	⋮	⋮
255	2.7V (VRB)	0	0	0	0	0	0	0	0

0 : LOW LEVEL
1 : HIGH LEVEL

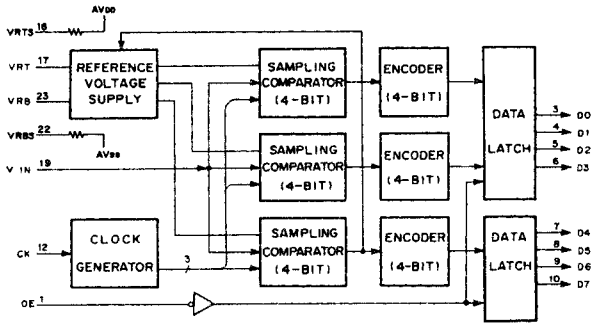

CXD2302Q (SONY)

C-MOS 8-BIT 50MSPS VIDEO A/D CONVERTER
– TOP VIEW –

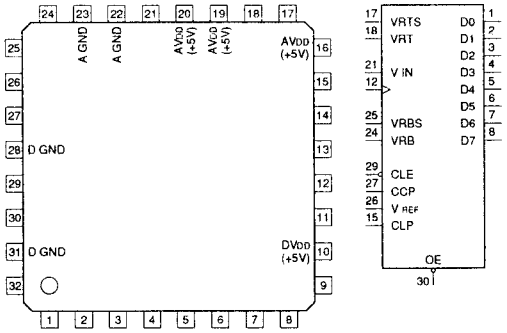

PIN NO.	I/O	SIGNAL	PIN NO.	I/O	SIGNAL
1	O	D0 (LSB)	17	I	VRTS
2	O	D1	18	I	VRT
3	O	D2	19	–	A VDD
4	O	D3	20	–	A VDD
5	O	D4	21	I	V IN
6	O	D5	22	–	A GND
7	O	D6	23	–	A GND
8	O	D7 (MSB)	24	I	VRB
9	–	TEST	25	I	VRBS
10	–	D VDD	26	I	V REF
11	–	TEST	27	I	CCP
12	I	CLK	28	–	D GND
13	–	NC	29	I	CL
14	–	NC	30	I	OE
15	I	CLP	31	–	D GND
16	–	A VDD	32	–	NC

INPUT
CCP ; CLAMP CONTROL VOLTAGE FOR INTEGRATOR
CLE ; CLAMP ENABLE
CLK ; CLOCK
CLP ; CLAMP PULSE
OE ; OUTPUT ENABLE
V IN ; ANALOG
VRB ; REFERENCE VOLTAGE (BOTTOM)
VRBS ; SELF REFERENCE VOLTAGE SHORT TO AGND (+0.6 V/BOTTOM)
VREF ; VOLTAGE REFERENCE FOR CLAMP
VRT ; REFERENCE VOLTAGE (TOP)
VRTS ; SELF REFERENCE VOLTAGE SHORT TO AVDD (+2.5 V/TOP)

OUTPUT
D0-D7 ; DATA

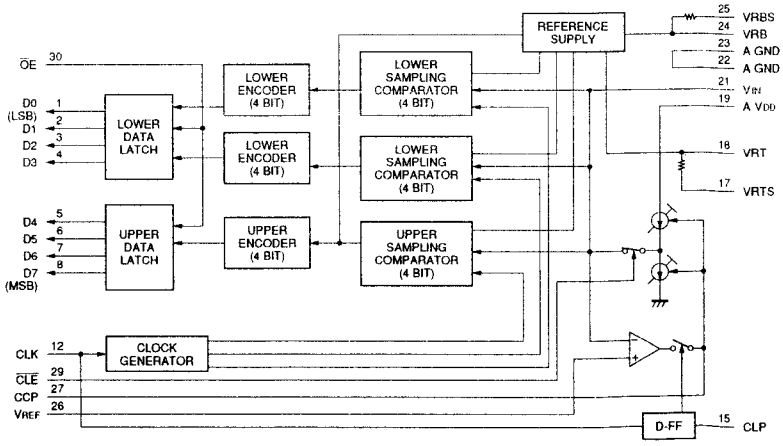

CXD2306Q (SONY)

C-MOS 10-BIT 75MSPS 1CH D/A CONVERTER
– TOP VIEW –

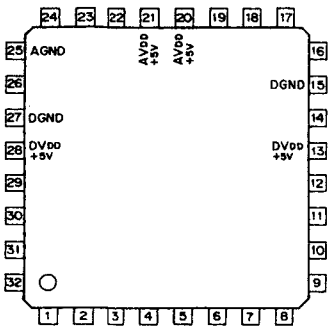

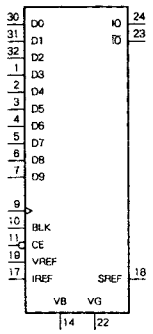

(A.VDD, D.VDD = + 5V)

PIN No.	I/O	SIGNAL	PIN No.	I/O	SIGNAL
1	I	D3	17	I	IREF
2	I	D4	18	O	SREF
3	I	D5	19	I	VREF
4	I	D6	20	–	A.VDD
5	I	D7	21	–	A.VDD
6	I	D8	22	O	VG
7	I	D9 (MSB)	23	O	$\overline{IO}$
8	–	NC	24	O	IO
9	I	CK	25	–	A.GND
10	I	BLK	26	–	NC
11	I	$\overline{CE}$	27	–	D.GND
12	–	NC	28	–	D.VDD
13	–	D.VDD	29		NC
14	O	VB	30	I	D0 (LSB)
15	–	D.GND	31	I	D1
16	–	NC	32	I	D2

$\overline{CE}$; CHIP ENABLE
CK ; CLOCK INPUT
BLK ; BLANKING PULSE INPUT
D0 – 7 ; DIGITAL DATA INPUT
IO ; CURRENT OUTPUT
$\overline{IO}$; INVERT CURRENT OUTPUT
IREF ; CURRENT REFERENCE INPUT
SREF ; INDEPENDENT CONSTANT VOLTAGE OUTPUT
VB, VG ; FOR CAPACITOR
VREF ; VOLTAGE REFERENCE INPUT

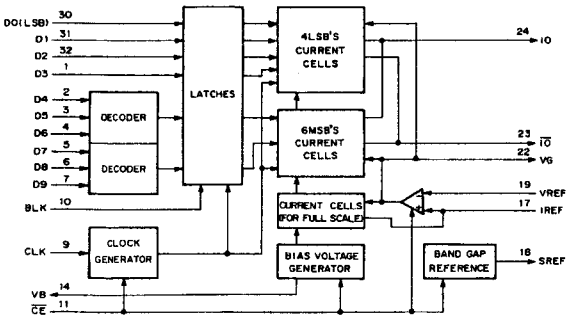

CXD2310R (SONY)

C-MOS 10-BIT 20MSPS VIDEO A/D CONVERTER
– TOP VIEW –

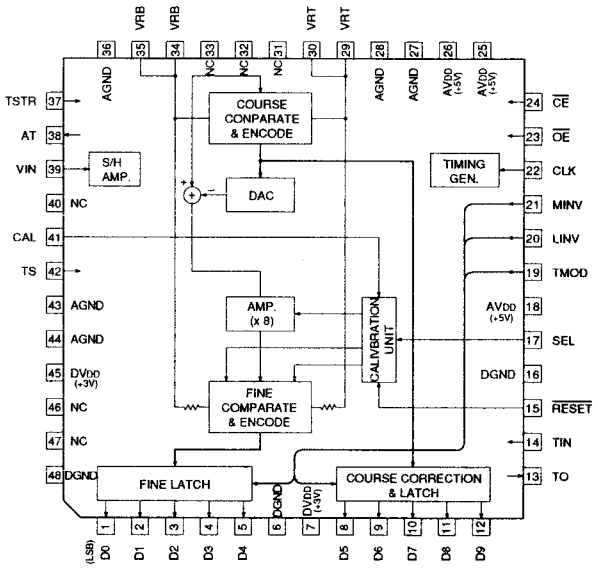

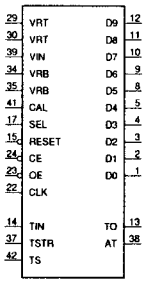

INPUT
CAL ; CALIBRATION PULSE INPUT
CE ; CHIP ENABLE
CLK ; CLOCK
LINV ; OUTPUT (D0-D8) INVERSION
MINV ; OUTPUT (D9) INVERSION
OE ; DIGITAL DATA OUTPUT ENABLE
RESET ; CALIBRATION CIRCUIT RESET
SEL ; OUTPUT DATA (D5-D9) SELECT FOR CALIBRATION (4-CLOCK) HIGH; THROUGH OUTPUT, LOW; DATA FIXED AS WITH D0-D4
TIN ; TEST SIGNAL INPUT
TMOD ; TEST MODE
TS ; TEST SIGNAL INPUT
TSTR ; TEST SIGNAL INPUT
VRB ; REFERENCE BOTTOM VOLTAGE
VRT ; REFERENCE TOP VOLTAGE

OUTPUT
AT ; TEST SIGNAL OUTPUT
D0-D9 ; DIGIRAL DATA OUTPUT
TO ; TEST PIN

CXD2202Q (SONY)

SERVO IC
– TOP VIEW –

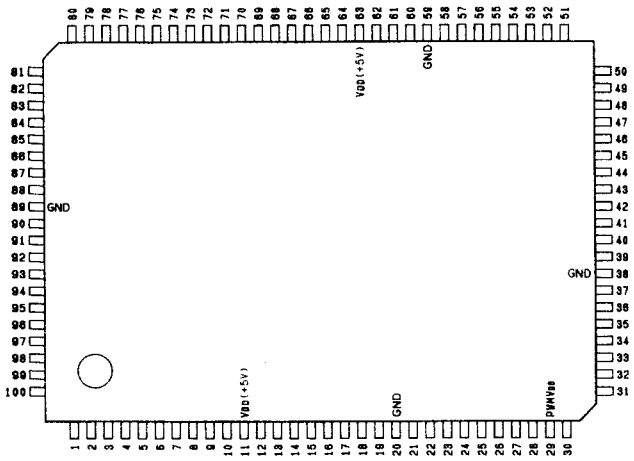

(VDD = + 5V)

PIN No.	I/O	SIGNAL	PIN No.	I/O	SIGNAL	PIN No.	I/O	SIGNAL	PIN No.	I/O	SIGNAL
1	I	FG1/IP24	26	I/O	IOP2	51	I/O	D7	76	O	PPG11/OP21
2	I	FG0/IP23	27	I/O	IOP1	52	I/O	D6	77	O	PPG10/OP20
3	I	$\overline{PBH}$/IP22	28	I/O	IOP0	53	I/O	D5	78	O	PPG0F/OP17
4	I	$\overline{SYNC1}$/IP21	29	–	PWM VDD	54	I/O	D4	79	O	PPG0E/OP16
5	I	$\overline{SYNC0}$/IP20	30	O	PWM7/OP37	55	I/O	D3	80	O	PPG0D/OP15
6	I	FG02/IP14	31	O	PWM6/OP36	56	I/O	D2	81	O	PPG0C/OP14
7	I	FG01/IP13	32	O	PWM5/OP35	57	I/O	D1	82	O	PPG0B/OP13
8	I	FG00/IP12	33	O	PWM4/OP34	58	I/O	D0	83	O	PPG0A/OP12
9	I	CTL/IP11	34	O	PWM3/OP33	59	–	GND	84	O	PPG09/OP11
10	I	LAT/IP10	35	O	PWM2/OP32	60	I	$\overline{RES}$	85	O	PPG08/OP10
11	–	VDD	36	O	PWM1/OP31	61	I	MD1	86	O	CLKO
12	I	UD/IP07	37	O	PWM0/OP30	62	I	MD0	87	I	EXTAL
13	I	CCLK/IP06	38	–	GND	63	–	VDD	88	O	XTAL
14	I	FGC1/IP05	39	I	AS14	64	I	$\overline{WR}$	89	–	GND
15	I	FGC0/IP04	40	I	AS13	65	I	$\overline{RD}$	90	O	PPG07/OP07
16	I	FGB1/IP03	41	I	A15	66	I	$\overline{CE}$	91	O	PPG06/OP06
17	I	FGB0/IP02	42	I	A14	67	O	$\overline{IREQ2}$	92	O	PPG05/OP05
18	I	FGA1/IP01	43	I	A13	68	O	$\overline{IREQ1}$	93	O	PPG04/OP04
19	I	FGA0/IP00	44	I	A6	69	O	$\overline{IREQ0}$	94	O	PPG03/OP03
20	–	GND	45	I	A5	70	I	FXSEL	95	O	PPG02/OP02
21	I/O	IOP7	46	I	A4	71	O	OP26	96	O	PPG01/OP01
22	I/O	IOP6	47	I	A3	72	O	$\overline{EXCS1}$/OP25	97	O	PPG00/OP00
23	I/O	IOP5	48	I	A2	73	O	$\overline{EXCS0}$/OP24	98	I	FG12/IP27
24	I/O	IOP4	49	I	A1	74	O	PPG13/OP23	99	I	FG11/IP26
25	I/O	IOP3	50	I	A0	75	O	PPG12/OP22	100	I	FG10/IP25

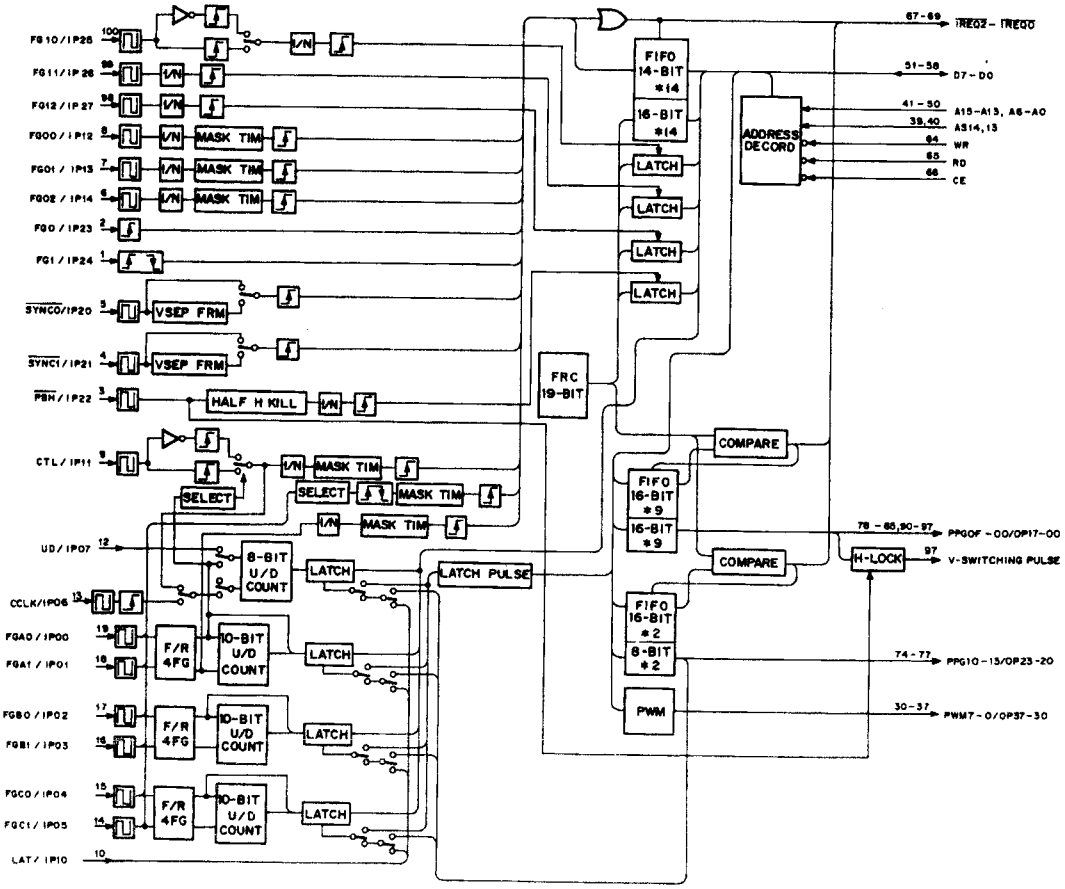

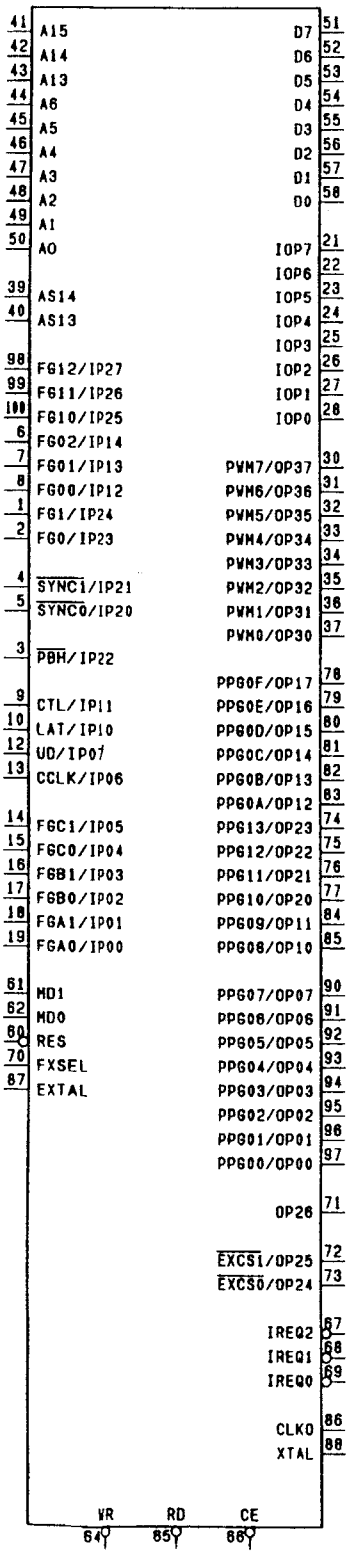

INPUT

A0 – A15	; ADDRESS BUS
AS13, AS14	; SELECTING CONDITION OF ADDRESS DECODER AS13 AND AS14 BITS
CCLK	; 8-BIT COUNTER CLOCK INPUT
CE	; CHIP ENABLE
CTL	; RESOLUTION 2.5MHz WITH EDGE SELECT FUNCTION. WITH FREQUENCY DIVISION MASK TIMER
EXTAL	; CRYSTAL OSCILLATION OR EXTERNAL CLOCK INPUT
FG0	; RESOLUTION 2.5MHz
FG00 – FG02	; FREQUENCY DIVISION ENABLE RESOLUTION 2.5MHz. WITH FREQUENCY DIVISION MASK TIMER
FG1	; RESOLUTION 2.5MHz BOTH EDGES
FG10	; EDGE SELECTION ENABLE RESOLUTION 10MHz
FG11, 12	; FREQUENCY DIVISION ENABLE RESOLUTION 10MHz
FGA0	; PERFORMS FORWARD/REVERSE ROTATION DETECTION AND 4FG COUNT (UP/DOWN) BY FGA0 AND FGA1. 10 BITS. UP/DOWN IS MADE BY CONTROLLING THE UP/DOWN OF 8-BIT COUNTER.
FGA1	; 4FG PERFORMS FREQUENCY DIVISION AND FRC CAPTURE THROUGH MASK TIMER. * 1 : SELECTS ONE OF FGA0 TO FGC1 INPUT AND DETECTS BOTH EDGES AND PERFORM THE FRC CAPTURE THROUGH THE MASK TIMER.
FGB0	; PERFORMS FORWARD/REVERSE ROTATION DETECTION AND 4FG COUNT BY FGB0 AND FGB1.
FGB1	; * 1 : SELECTS ONE OF FGA0 TO FGC1 INPUT AND DETECTS BOTH EDGES AND PERFORM THE FRC CAPTURE THROUGH THE MASK TIMER.
FGC0	; PERFORMS FORWARD/REVERSE ROTATION DETECTION AND 4FG COUNT BY FGC0 AND FGC1.
FGC1	; * 1 : SELECTS ONE OF FGA0 TO FGC1 INPUT AND DETECTS BOTH EDGES AND PERFORM THE FRC CAPTURE THROUGH THE MASK TIMER.
FXSEL	; FREQUENCY DIVISION SELECTION OF CLOCK INPUT
LAT	; EXTERNAL LATCH TIMING OF UP/DOWN COUNTER
MD0, 1	; TEST MODE DESIGNATION
PBH	; INPUT OF COMPOSITE SYNC OR H SYNC. RESOLUTION 10MHz. WITH HALF H KILLER.
RD	; REDE
RES	; RESET
SYNC0, 1	; INPUT OF COMPOSITE SYNC OR V SYNC. RESOLUTION 2.5MHz.
UD	; 8-BIT COUNTER UP/DOWN INPUT
WR	; WRITE

OUTPUT

CLKO	; CLOCK OUTPUT
EXCS0, 1	; DECODE AT ADDRESS A3 LEVEL
IREQ0	; INTERRUPTION SIGNAL OF FRC CAPTURE UNIT
IREQ1	; COINCIDENCE INTERRUPTION OF PPG0
IREQ2	; COINCIDENCE INTERRUPTION OF PPG1
OP26	; EXCLUSIVELY OUTPUT PORT
PPG00 – PPG0F	
PPG10 – PPG13	; PROGRAMMABLE PULSE GENERATOR RESOLUTION 1.25MHz PPG00 : WITH HLOCK
PWM0 – PWM5	; PWM OUTPUT NORMALLY PWM. OR PWM0 AND PWM1, PWM2 AND PWM3, OR PWM4 AND PWM5 OUTPUT SIGNAL CORRESPONDED TO PUSH-PULL.
PWM6, 7	; PWM OUTPUT
XTAL	; CRYSTAL OSCILLATION

INPUT/OUTPUT

D0 – D7	; DATA BUS
IOP0 – IOP7	; SELECTS AND USES INPUT AND OUTPUT BY EVERY 1 BIT.

CXD303-101Q (SONY)

C-MOS SETUP ADD/REMOVE
– TOP VIEW –

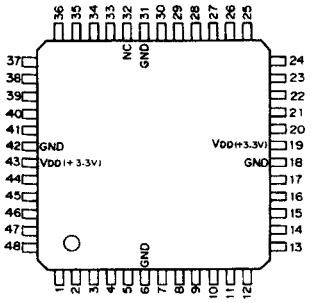

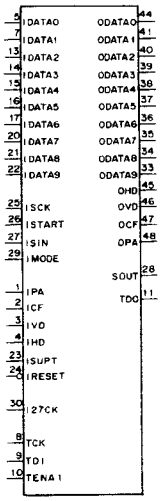

INPUT
I27CK ; SYSTEM CLOCK (27MHz)
ICF ; COLOR FRAMING DATA
IDATA0-IDATA9
; 4 : 2 : 2 PARALLEL DATA
IHD ; HD
IMODE ; SERIAL COMMUNICATION FORMAT SELECT
(1 : ANALOG TBC PLAYBACK COMMUNICATION FORMAT,
0 : DIGITAL β CAM RECORD COMMUNICATION FORMAT)
IPA ; PARITIY DATA
IRESET ; SYSTEM RESET
ISCK ; SERIAL COMMUNICATION CLOCK
ISIN ; SERIAL COMMUNICATION DATA
ISTART ; SERIAL COMMUNICATION START PULSE
ISURT ; HALF H BLANKING TIMING PULSE
IVD ; VD
TCK ; SMART CHECK TERMINAL
TDI ; SMART CHECK TERMINAL
TENA1 ; SMART CHECK TERMINAL

OUTPUT
OCF ; COLOR FRAMING DATA
ODATA0-ODATA9
; 4 : 2 : 2 PARALLEL DATA
OHD ; HD
OPA ; PARITY DATA
OVD ; VD
SOUT ; SERIAL COMMUNICATION DATA
TDO ; SMART CHECK TERMINAL

(V_{DD} = + 3.3V)

PIN No.	I/O	SIGNAL	PIN No.	I/O	SIGNAL	PIN No.	I/O	SIGNAL	PIN No.	I/O	SIGNAL
1	I	IPA	13	I	IDATA2	25	I	ISCK	37	O	ODATA5
2	I	ICF	14	I	IDATA3	26	I	ISTART	38	O	ODATA4
3	I	IVD	15	I	IDATA4	27	I	ISIN	39	O	ODATA3
4	I	IHD	16	I	IDATA5	28	O	SOUT	40	O	ODATA2
5	I	IDATA0	17	I	IDATA6	29	I	IMODE	41	O	ODATA1
6	–	GND	18	–	GND	30	I	I27CK	42	–	GND
7	I	IDATA1	19	–	V_{DD}	31	–	GND	43	–	V_{DD}
8	I	TCK	20	I	IDATA7	32	–	NC	44	O	ODATA0
9	I	TDI	21	I	IDATA8	33	O	ODATA9	45	O	OHD
10	I	TENA1	22	I	IDATA9	34	O	ODATA8	46	O	OVD
11	O	TDO	23	I	ISUPT	35	O	ODATA7	47	O	OCF
12	–	VST	24	I	IRESET	36	O	ODATA6	48	O	OPA

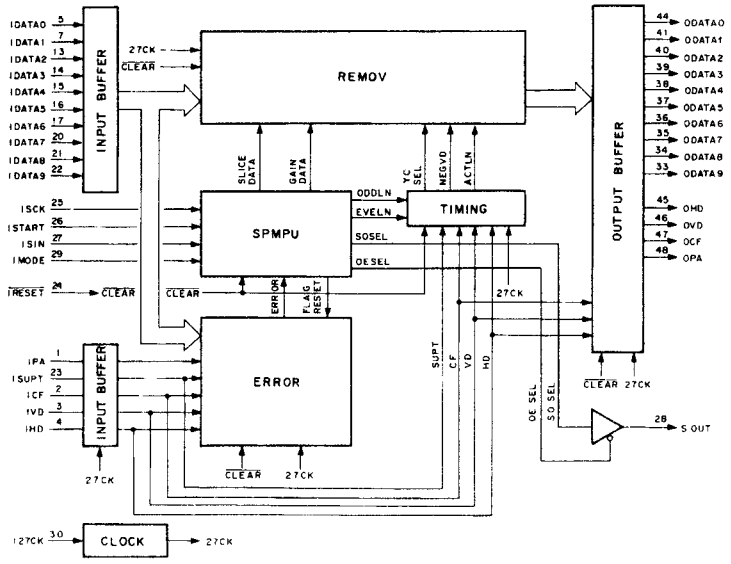

CXD304-106Q (SONY)

C-MOS 10-BIT PEDESTAL LEVEL REPLACEMENT OF COMPOSITE SIGNAL
– TOP VIEW –

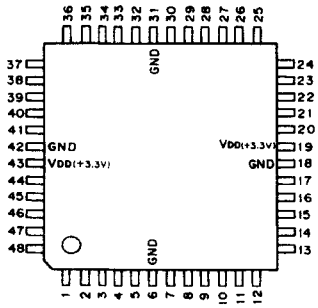

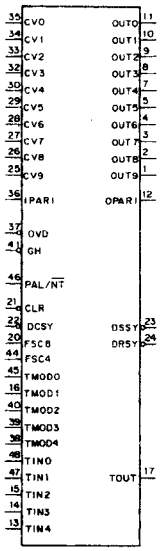

INPUT

CLR	; POWER ON RESET
CV0 – CV9	; 10-BIT COMPOSITE DATA
DCSY	; ANALOG SYNC
FSC4	; 4fsc CLOCK
FSC8	; 8fsc CLOCK
GH	; GH (GATED H) FROM CXD8819AQ
IPARI	; PARITY OF INPUT DATA
OVD	; OUTPUT VD FROM CXD8819AQ
PAL/$\overline{NT}$	; H : PAL, L : NTSC
TIN0 – TIN4	; TEST PIN : OPEN
TMOD0 – TMOD4	; TEST PIN : OPEN

OUTPUT

DRSY	; ANALOG DELAYED SYNC ($\overline{8fsc}$; 56-CLOCK)
DSSY	; ANALOG DELAYED SYNC (8fsc ; 56-CLOCK)
OPARI	; PARITY OF OUTPUT DATA
OUT0 – OUT9	; 10-BIT COMPOSITE DATA
TOUT	; TEST PIN

(V_{DD} = + 3.3V)

PIN No.	I/O	SIGNAL	PIN No.	I/O	SIGNAL	PIN No.	I/O	SIGNAL	PIN No.	I/O	SIGNAL
1	O	OUT9	13	I	TIN4	25	I	CV9	37	I	$\overline{OVD}$
2	O	OUT8	14	I	TIN3	26	I	CV8	38	I	TMOD4
3	O	OUT7	15	I	TIN2	27	I	CV7	39	I	TMOD3
4	O	OUT6	16	I	TMOD1	28	I	CV6	40	I	TMOD2
5	O	OUT5	17	O	TOUT	29	I	CV5	41	I	$\overline{GH}$
6	–	GND	18	–	GND	30	I	CV4	42	–	GND
7	O	OUT4	19	–	V_{DD}	31	–	GND	43	–	V_{DD}
8	O	OUT3	20	I	FSC8	32	I	CV3	44	I	FSC4
9	O	OUT2	21	I	$\overline{CLR}$	33	I	CV2	45	I	TMOD0
10	O	OUT1	22	I	DCSY	34	I	CV1	46	I	PAL/$\overline{NT}$
11	O	OUT0	23	O	$\overline{DSSY}$	35	I	CV0	47	I	TIN1
12	O	OPARI	24	O	$\overline{DRSY}$	36	I	IPARI	48	I	TIN0

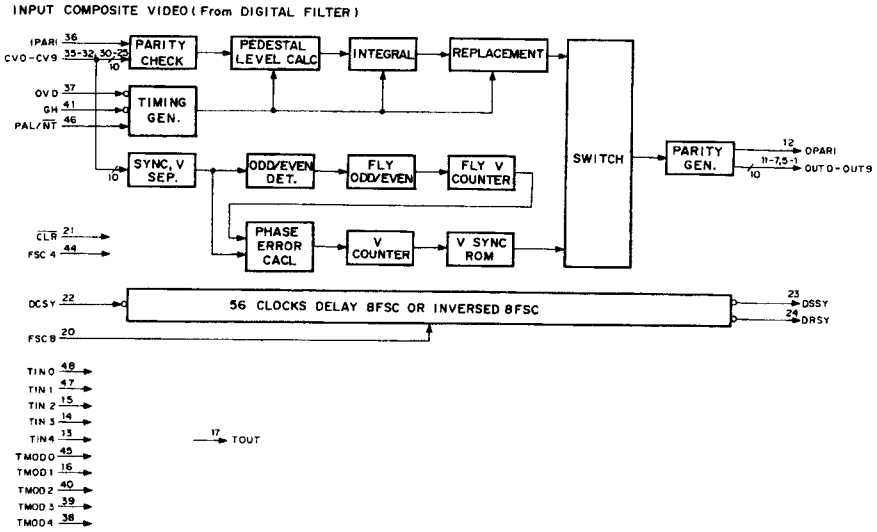

CXD306-138Q (SONY)

C-MOS DATA RATE CONVERTER
– TOP VIEW –

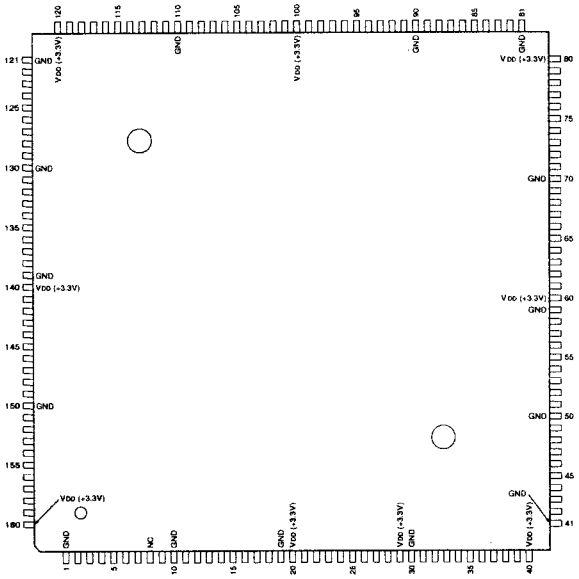

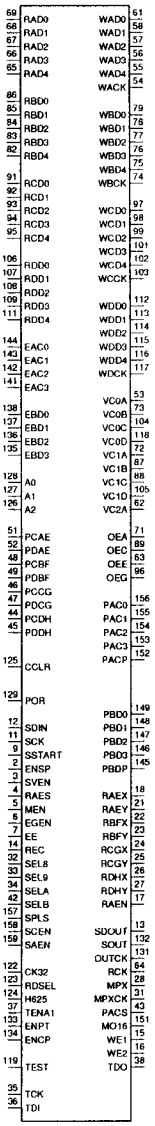

PIN No.	I/O	SIGNAL	PIN No.	I/O	SIGNAL	PIN No.	I/O	SIGNAL	PIN No.	I/O	SIGNAL
1	–	GND	41	–	GND	81	–	GND	121	–	GND
2	I	ENSP	42	I	SELB	82	I	RBD4	122	I	CK32
3	I	SVEN	43	O	PACS	83	I	RBD3	123	I	RDSEL
4	I	RAES	44	I	PCDH	84	I	RBD2	124	I	H625
5	I	MEN	45	I	PDDH	85	I	RBD1	125	I	CCLR
6	I	EGEN	46	I	PCCG	86	I	RBD0	126	I	A2
7	I	EE	47	I	PDCG	87	O	VC1B	127	I	A1
8	–	NC	48	I	PCBF	88	O	VC1C	128	I	A0
9	I	SSTART	49	I	PDBF	89	O	OEC	129	I	POR
10	–	GND	50	–	GND	90	–	GND	130	–	GND
11	I	SCK	51	I	PCAE	91	I	RCD0	131	O	OUTCK
12	I	SDIN	52	I	PDAE	92	I	RCD1	132	O	SOUT
13	O	SDOUT	53	O	VC0A	93	I	RCD2	133	I	ENPT
14	I	REC	54	O	WACK	94	I	RCD3	134	I	ENCP
15	O	WE1	55	O	WAD4	95	I	RCD4	135	I	EBD3
16	O	WE2	56	O	WAD3	96	O	OEG	136	I	EBD2
17	O	RAEN	57	O	WAD2	97	O	WCD0	137	I	EBD1
18	O	RAEX	58	O	WAD1	98	O	WCD1	138	I	EBD0
19	–	GND	59	–	GND	99	O	WCD2	139	–	GND
20	–	VDD	60	–	VDD	100	–	VDD	140	–	VDD
21	O	RAEY	61	O	WAD0	101	O	WCD3	141	I	EAC3
22	O	RBFX	62	O	VC2A	102	O	WCD4	142	I	EAC2
23	O	RBFY	63	O	OEE	103	O	WCCK	143	I	EAC1
24	O	RCGX	64	O	RCK	104	O	VC0C	144	I	EAC0
25	O	RCGY	65	I	RAD4	105	O	VC1D	145	O	PBDP
26	O	RDHX	66	I	RAD3	106	I	RDD0	146	O	PBD3
27	O	RDHY	67	I	RAD2	107	I	RDD1	147	O	PBD2
28	O	MPX	68	I	RAD1	108	I	RDD2	148	O	PBD1
29	–	VDD	69	I	RAD0	109	I	RDD3	149	O	PBD0
30	–	GND	70	–	GND	110	–	GND	150	–	GND
31	O	MPXCK	71	O	OEA	111	I	RDD4	151	O	MO16
32	I	SEL8	72	O	VC1A	112	O	WDD0	152	O	PACP
33	I	SEL9	73	O	VC0B	113	O	WDD1	153	O	PAC3
34	I	SELA	74	O	WBCK	114	O	WDD2	154	O	PAC2
35	I	TCK	75	O	WBD4	115	O	WDD3	155	O	PAC1
36	I	TDI	76	O	WBD3	116	O	WDD4	156	O	PAC0
37	I	TENA1	77	O	WBD2	117	O	WDCK	157	I	SPLS
38	O	TDO	78	O	WBD1	118	O	VC0D	158	I	SCEN
39	–	VST	79	O	WBD0	119	I	TEST	159	I	SAEN
40	–	VDD	80	–	VDD	120	–	VDD	160	–	VDD

(VDD=+3.3V)

INPUT

A0-A2	: IC ADDRESS
CCLR	: COUNTER CLEAR
CK32	: 32MHz CLOCK
EAC0-3	: ENCODE A/C DATA
EBD0-3	: ENCODE B/D DATA
EE	: BYPASS
EGEN	: EDIT GAP ENABLE
ENCP	: ENCODE
ENPT	: ENCODE ENABLE PARITY
ENSP	: ENCODER START PULSE
H625	: H.625 MODE
MEN	: MPX ENABLE
PCAE	: PB A/E CLOCK
PCBF	: PB B/F CLOCK
PCCG	: PB C/G CLOCK
PCDH	: PB D/H CLOCK
PDAE	: PB A/E DATA
PDBF	: PB B/F DATA
PDCG	: PB C/G DATA
PDDH	: PB D/H DATA
POR	: RESET
RAD0-4	: MEMORY (A) READ DATA
RAES	: REC A/E SELECT
RBD0-4	: MEMORY (B) READ DATA
RCD0-4	: MEMORY (C) READ DATA
RDD0-4	: MEMORY (D) READ DATA
RDSEL	: REC DATA SELECT
REC	: L:REC MODE
SAEN	: SAT A/E ENABLE
SCEN	: SAT C/G ENABLE
SCK	: SERIAL CLOCK
SDIN	: SERIAL DATA IN
SEL8	: PB A/E SELECT
SEL9	: PB B/F SELECT
SELA	: PB C/G SELECT
SELB	: PB D/H SELECT
SPLS	: START PULSE
SSTART	: SERIAL START
SVEN	: SERVO REC ENABLE
TCK	: TEST CLOCK
TDI	: TEST DATA
TENA1	: TEST ENABLE
TEST	: TEST

OUTPUT

MO16	: 16MHz CLOCK OUT
MPX	: MPX DATA
MPXCK	: MPX CLOCK
OEA,OEC,OEE,OEG	: MEMORY OUTPUT ENABLE
OUTCK	: SERIAL OUT CLOCK
PAC0-3	: PB A/C DATA
PACP	: PB A/C PARITY
PACS	: PB A/C SELECT
PBD0-3	: PB B/D DATA
PBDP	: PB B/D PARITY
RAEN	: REC A ENABLE
RAEX,RAEY	: REC A/E DATA
RBFX,RBFY	: REC B/F DATA
RCGX,RCGY	: REC C/G DATA
RCK	: MEMORY READ CLOCK
RDHX,RDHY	: REC D/H DATA
SOUT	: SERIAL OUT DATA
SDOUT	: SERIAL DATA
TDO	: TEST DATA
VC0A-D	: MEMORY VCLR0
VC1A-D	: MEMORY VCLR1
VC2A	: MEMORY VCLR2
WACK	: MEMORY (A) WRITE CLOCK
WAD0-4	: MEMORY (A) WRITE DATA
WBCK	: MEMORY (B) WRITE CLOCK
WBD0-4	: MEMORY (B) WRITE DATA
WCCK	: MEMORY (C) WRITE CLOCK
WCD0-4	: MEMORY (C) WRITE DATA
WDCK	: MEMORY (D) WRITE CLOCK
WDD0-4	: MEMORY (D) WRITE DATA
WE1,WE2	: MEMORY WRITE ENABLE

CXD8280AQ (SONY)

C-MOS DIGITAL AUDIO TIME BASE EXPANSION FOR SIF RECEIVER
– TOP VIEW –

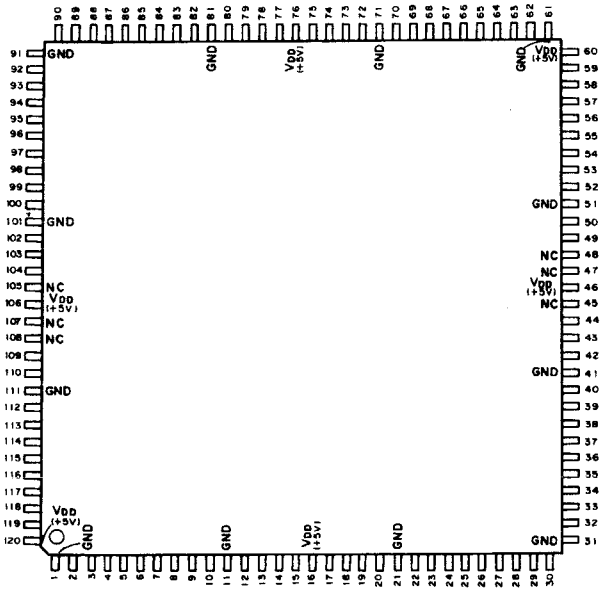

(VDD = + 5V)

PIN No.	I/O	SIGNAL	PIN No.	I/O	SIGNAL	PIN No.	I/O	SIGNAL	PIN No.	I/O	SIGNAL
1	–	GND	31	–	GND	61	–	GND	91	–	GND
2	IU	IT1	32	OT	C3/4	62	IU	OECRD	92	IU	AUX0 (LSB)
3	IU	CLR	33	OT	C1/2	63	IU	CRA0 (LSB)	93	IU	AUX1
4	OT	DLY5 (MSB)	34	OT	U3/4	64	IU	CRA1	94	IU	AUX2
5	OT	DLY4	35	OT	U1/2	65	IU	CRA2	95	IU	AUX3
6	OT	DLY3	36	OT	V3/4	66	IU	CRA3	96	IU	AUX4
7	OT	DLY2	37	OT	V1/2	67	IU	CRA4	97	IU	AUX5
8	OT	DLY1	38	OT	AD3/4	68	IU	CRA5	98	IU	AUX6
9	OT	DLY0 (LSB)	39	OT	AD1/2	69	IU	CRA6 (MSB)	99	IU	AUX7
10	IU	OEDLY	40	ID	OEAD	70	IU	CREN	100	IU	AUX8
11	–	GND	41	–	GND	71	–	GND	101	–	GND
12	IU	IT2	42	ID	BCK	72	O	ERR1	102	IU	AUX9 (MSB)
13	IU	IT3	43	IU	LRCK	73	O	ERR2	103	IU	ADFT
14	IU	IT4	44	O	OT2	74	O	ERR3	104	IU	10/9
15	IU	IT5	45	–	NC	75	O	ERR4	105	–	NC
16	–	VDD	46	–	VDD	76	–	VDD	106	–	VDD
17	IU	MUTE4	47	–	NC	77	O	EXT1	107	–	NC
18	IU	MUTE3	48	–	NC	78	O	EXT2	108	–	NC
19	IU	MUTE2	49	IU	IT6	79	O	EXT3	109	IU	TRS
20	IU	MUTE1	50	IU	CRCK	80	O	EXT4	110	ID	VCK
21	–	GND	51	–	GND	81	–	GND	111	–	GND
22	IU	CHEX1	52	OT	CRD7 (MSB)	82	OT	DIDPER	112	IU	D2/D1
23	IU	CHEX0	53	OT	CRD6	83	OT	DIDERR	113	IU	DID1
24	IU	AFS	54	OT	CRD5	84	OT	DBNPER	114	IU	DID0
25	IU	LRS	55	OT	CRD4	85	OT	DBNERR	115	IU	ERDB
26	IU	DIR	56	OT	CRD3	86	OT	DCPER	116	IU	IT7
27	IU	20/16	57	OT	CRD2	87	OT	DCERR	117	IU	IT8
28	O	OT1	58	OT	CRD1	88	OT	UDPER	118	O	OT3
29	OT	Z3/4	59	OT	CRD0 (LSB)	89	OT	CSERR	119	O	WRDL
30	OT	Z1/2	60	OT	VDD	90	IU	OEERR	120	–	VDD

IU ; INPUT WITH PULL-UP REGISTER
ID ; INPUT WITH PULL-DOWN REGISTER
OT ; TRI-STATE OUTPUT

INPUT (WITH PULL-DOWN REGISTER)

BCK	; DIGITAL AUDIO BIT CLOCK (= 64 × Fs)
OEAD	; OUTPUT ENABLE FOR PINS 29 THROUGH 39 (L)
VCK	; VIDEO CLOCK (= 4Fsc)

INPUT (WITH PULL-UP REGISTER)

10/9	; INPUT AUX. DATA 10-BIT/9-BIT MODE SELECT
20/16	; DIGITAL AUDIO 20-BIT/16-BIT SELECT
ADFT	; AUX. DATA FLAG TIMING
AFS	; DIGITAL AUDIO FORMAT SELECT
CHEX1	; CHANNEL EXCHANGE 1
AUX0 – AUX9	; AUX. DATA0 – 9
CHEX0,1	; CHANNEL EXCHANGE 0,1
CLR	; POWER ON CLEAR (L)
CRA0 – CRA6	; CHANNEL STATUS READ ADDRESS0 – 6
CRCK	; CHANNEL STATUS READ ADDRESS WRITE CLOCK
CREN	; CHANNEL STATUS READ ADDRESS WRITE ENABLE (L)
D2/D1	; VIDEO FORMAT D2/D1 SELECT
DID0,1	; DATA ID BIT 0,1
DIR	; DIGITAL AUDIO MSB FIRST/LSB FIRST SELECT
ERDB	; ERROR OVERRIDE FOR CIRCUIT DEBUG
IT1 – 8	; TEST (L)
LRCK	; DIGITAL AUDIO L/R CLOCK (= Fs)
LRS	; DIGITAL AUDIO LEFT/RIGHT BIT POSITION SELECT
MUTE1 – MUTE4	; DIGITAL AUDIO CH1 – CH4 MUTE (L)
OECRD	; OUTPUT ENABLE FOR CRD0-7
OEDLY	; OUTPUT ENABLE FOR DLY0 – 5 (L)
OEERR	; OUTPUT ENABLE FOR PINS 82 THROUGH 89
TRS	; VIDEO H-SYNC

OUTPUT

ERR1 – ERR4	; DIGITAL AUDIO CH1 – CH4 ERROR (L)
EXT1 – EXT4	; DIGITAL AUDIO CH1 – CH4 EXIST
OT1	; TEST (MEMORY READ)
OT2	; TEST (READ CLEAR)
OT3	; TEST (MEMORY WRITE)
WRDL	; TEST (WRITE/READ DELAY)

OUTPUT (TRI-STATE)

AD1/2	; DIGITAL AUDIO CH-1/2 DATA
AD3/4	; DIGITAL AUDIO CH-3/4 DATA
C1/2	; DIGITAL AUDIO CH-1/2 CHANNEL STATUS BIT
C3/4	; DIGITAL AUDIO CH-3/4 CHANNEL STATUS BIT
CRD0 – CRD7	; CHANNEL STATUS READ DATA0 – 7
CSERR	; CHECK SUM ERROR (L)
DBNERR	; DBN UNCONTINUITY ERROR (L)
DBNPER	; DBN PARITY ERROR (L)
DCERR	; DC UNMATCH ERROR (L)
DCPER	; DC PARITY ERROR (L)
DIDERR	; DID UNMATCH ERROR (L)
DIDPER	; DID PARITY ERROR (L)
DLY0 – DLY5	; SAMPLE DELAY INDICATOR BIT0 – 5
U1/2	; DIGITAL AUDIO CH-1/2 USER DATA BIT
U3/4	; DIGITAL AUDIO CH-3/4 USER DATA BIT
UDPER	; UD PARITY ERROR (L)
V1/2	; DIGITAL AUDIO CH-1/2 VALIDITY FLAG
V3/4	; DIGITAL AUDIO CH-3/4 VALIDITY FLAG
Z1/2	; DIGITAL AUDIO CH-1/2 BLOCK SYNC (Z-FLAG)
Z3/4	; DIGITAL AUDIO CH-3/4 BLOCK SYNC (Z-FLAG)

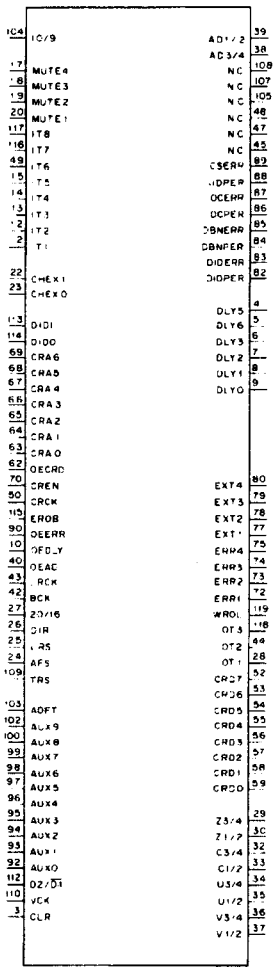

CXD8281Q (SONY) FLAT PACKAGE

C-MOS DIGITAL AUDIO TIME BASE COMPRESSION FOR SIF TRANSMITER
– TOP VIEW –

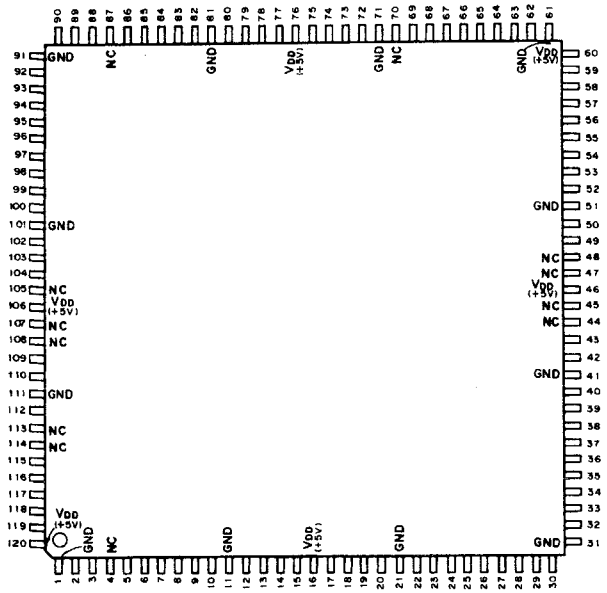

(VDD = + 5V)

PIN No.	I/O	SIGNAL	PIN No.	I/O	SIGNAL	PIN No.	I/O	SIGNAL	PIN No.	I/O	SIGNAL
1	–	VSS	31	–	GND	61	–	GND	91	–	GND
2	IU	IT1	32	ID	C3/4	62	IU	CWA0 (LSB)	92	OT	AUX0 (LSB)
3	IU	CLR	33	ID	C1/2	63	IU	CWA1	93	OT	AUX1
4	–	NC	34	ID	U3/4	64	IU	CWA2	94	OT	AUX2
5	O	OT1	35	ID	U1/2	65	IU	CWA3 (MSB)	95	OT	AUX3
6	O	OT2	36	ID	V3/4	66	IU	CWEN	96	OT	AUX4
7	O	OT3	37	ID	V1/2	67	IU	IT3	97	OT	AUX5
8	O	OT4	38	ID	AD3/4	68	IU	IT4	98	OT	AUX6
9	O	OT5	39	ID	AD1/2	69	IU	IT5	99	OT	AUX7
10	O	OT6	40	ID	BCK	70	–	NC	100	OT	AUX8
11	–	GND	41	–	GND	71	–	GND	101	–	GND
12	O	OT7	42	ID	128CK	72	IU	DID0	102	OT	AUX9 (MSB)
13	O	OT8	43	IU	LRCK	73	IU	DID1	103	O	ADBT
14	O	OT9	44	–	NC	74	IU	LIM0	104	ID	OEAUX
15	O	OT10	45	–	NC	75	IU	LIM1	105	–	NC
16	–	VDD	46	–	VDD	76	–	VDD	106	–	VDD
17	O	OT11	47	–	NC	77	IU	CHS1	107	–	NC
18	O	OT12	48	–	NC	78	IU	CHS2	108	–	NC
19	O	OT13	49	IU	IT2	79	IU	CHS3	109	IU	SYNC
20	O	OT14	50	IU	CWCK	80	IU	CHS4	110	ID	VCK
21	–	GND	51	–	GND	81	–	GND	111	–	GND
22	IU	CHEX1	52	IU	CWD7 (MSB)	82	IU	DLY0 (LSB)	112	IU	D2/D1
23	IU	CHEX0	53	IU	CWD6	83	IU	DLY1	113	–	NC
24	IU	AFS	54	IU	CWD5	84	IU	DLY2	114	–	NC
25	IU	LRS	55	IU	CWD4	85	IU	DLY3	115	O	OT15
26	IU	DIR	56	IU	CWD3	86	IU	DLY4 (MSB)	116	O	OT16
27	IU	20/16	57	IU	CWD2	87	–	NC	117	O	OT17
28	IU	ZCS	58	IU	CWD1	88	O	AUXT	118	O	OT18
29	ID	Z3/4	59	IU	CWD0 (LSB)	89	O	UDT	119	O	OT19
30	ID	Z1/2	60	–	VDD	90	O	ADFT	120	–	VDD

IU : INPUT WITH PULL-UP REGISTER
ID : INPUT WITH PULL-DOWN REGISTER
OT : TRI-STATE OUTPUT

INPUT (WITH PULL-DOWN REGISTER)

128CK	; DIGITAL AUDIO 128 × Fs CLOCK
AD1/2	; DIGITAL AUDIO CH-1/2 DATA
AD3/4	; DIGITAL AUDIO CH-3/4 DATA
BCK	; DIGITAL AUDIO BIT CLOCK (= 64 × Fs)
C1/2	; DIGITAL AUDIO CH-1/2 CHANNEL STATUS BIT
C3/4	; DIGITAL AUDIO CH-3/4 CHANNEL STATUS BIT
OEAUX	; OUTPUT ENABLE FOR AUX0-9 (L)
U1/2	; DIGITAL AUDIO CH-1/2 USER DATA BIT
U3/4	; DIGITAL AUDIO CH-3/4 USER DATA BIT
V1/2	; DIGITAL AUDIO CH-1/2 VALIDITY FLAG
V3/4	; DIGITAL AUDIO CH-3/4 VALIDITY FLAG
VCK	; VIDEO CLOCK (= 4Fsc) INPUT
Z1/2	; DIGITAL AUDIO CH-1/2 BLOCK SYNC (Z-FLAG)
Z3/4	; DIGITAL AUDIO CH-3/4 BLOCK SYNC (Z-FLAG)

INPUT (WITH PULL-UP REGISTER)

20/16	; DIGITAL AUDIO 20BIT/16BIT SELECT
AFS	; DIGITAL AUDIO FORMAT SELECT
CHEX0,1	; CHANNEL EXCHANGE 0,1
CHS1 – CHS4	; AUDIO CH1 – CH4 OUTPUT SELECT (L)
CLR	; POWER ON CLEAR (L)
CWA0 – CWA3	; CHANNEL STATUS REGISTER WRITE ADDRESS 0 – 3
CWCK	; CHANNEL STATUS REGISTER WRITE CLOCK
CWD0 – CWD7	; CHANNEL STATUS REGISTER WRITE DATA 0 – 7
CWEN	; CHANNEL STATUS REGISTER WRITE ENABLE
D2/D1	; VIDEO FORMAT D2/D1 SELECT
DID0,1	; DATA ID BIT0,1
DIR	; DIGITAL AUDIO MSB FIRST/LSB FIRST SELECT
DLY0 – DLY4	; DELAY CONTROL BIT0 – BIT3
IT1 – IT5	; TEST (L)
LIM0,1	; LINE MODE 0,1
LRCK	; DIGITAL AUDIO L/R CLOCK (= Fs)
LRS	; DIGITAL AUDIO LEFT/RIGHT BIT POSITION SELECT
SYNC	; VIDEO SYNC INPUT
ZCS	; DIGITAL AUDIO Z-FLAG C-BIT SELECT

OUTPUT

ADBT	; AUX. DATA BLOCK TIMING
ADFT	; AUX. DATA FLAG TIMING
AUXT	; AUX. DATA TIMING
OT1 – OT19	; TEST
UDT	; USER DATA TIMING

OUTPUT (TRI-STATE)

AUX0 – AUX9	; AUX. DATA 0 – 9

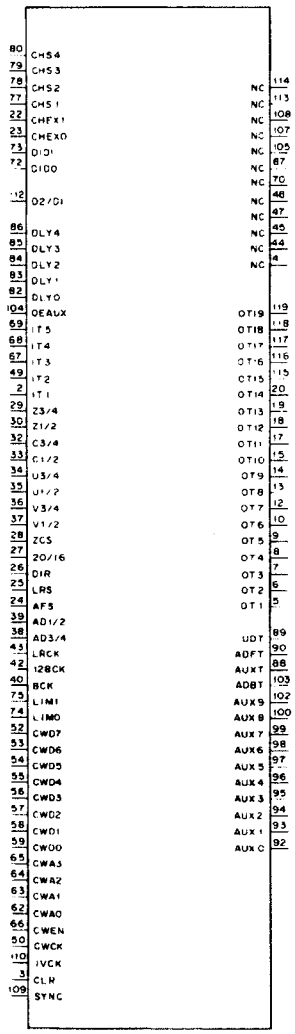

CXD8386AQ (SONY)

C-MOS 4:2:2 COMPONENT DECODER
– TOP VIEW –

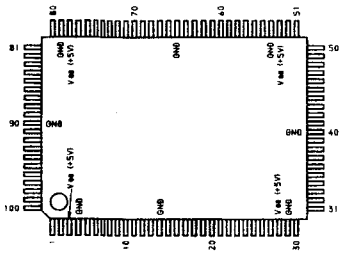

(V$_{DD}$ = +5V)

PIN No.	I/O	SIGNAL	PIN No.	I/O	SIGNAL	PIN No.	I/O	SIGNAL	PIN No.	I/O	SIGNAL
1	O	PERROR	26	O	VD2	51	I	DICK	76	I	D1J2
2	O	POUT	27	O	VD1	52	I	D10	77	I	FFWON
3	-	VDD	28	-	VDD	53	-	VDD	78	-	VDD
4	-	GND	29	-	GND	54	-	GND	79	-	GND
5	O	CRCC	30	O	VD0	55	I	D11	80	I	DATASEL0
6	O	CF2	31	O	FFW	56	I	D12	81	I	DATASEL1
7	O	CF1	32	O	TFW	57	I	D13	82	I	TSTENA
8	O	CF0	33	O	XER	58	I	D14	83	I	TEST
9	O	KF	34	O	D0	59	I	D15	84	I	CFOSEL
10	O	KVVD	35	O	D1	60	I	D16	85	I	VDMUTE
11	O	KHHD	36	O	D2	61	I	D17	86	I	FIFOWIN
12	O	VD9	37	O	D3	62	I	D18	87	I	FIFORSTW
13	O	VD8	38	O	SEPCK1	63	I	D19	88	I	FIFOWCK
14	O	VD7	39	O	VDEOR	64	I	HIZ	89	I	FIFORX
15	-	GND	40	-	GND	65	-	GND	90	-	GND
16	O	VD6	41	O	KCK	66	I	TCLR	91	I	SEL
17	O	VD5	42	O	FMX	67	I	THCNT	92	I	LIM
18	O	VD4	43	O	D4	68	I	TFCNT	93	I	ANCDEL
19	O	FREERUN	44	O	D5	69	I	TCNT	94	I	INDEXDEL
20	O	LST0	45	O	D6	70	I	TFCK	95	I	INDEXENA
21	O	FFWCONT	46	O	TRSDET	71	I	TCH01	96	I	ALLDEL
22	O	INDEXCOM	47	O	KAH	72	I	TCH02	97	I	TWV
23	I	CFINC	48	O	D7	73	I	THCOR	98	I	INXBOB2
24	I	TRSMODE	49	O	D8	74	I	XCOR	99	I	INXBB0
25	O	VD3	50	O	D9	75	I	VFMD	100	I	INXBB1

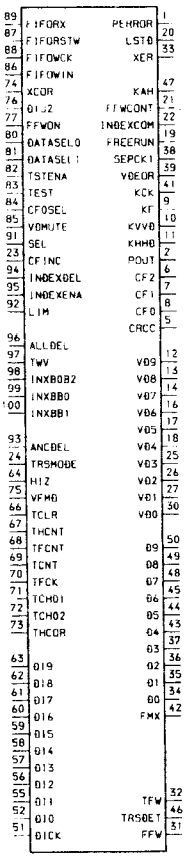

INPUT

ALLDEL	:DELETE CONTROL FOR BETWEEN EAV AND SAV
ANCDEL	:ANC DELETE CONTROL
CFOSEL	:CF0 SELECT
CFINC	:CF INCRIMENT CONTROL
D1J2	:MODE SELECT
DATASEL0, 1	:D0-D9 DATA CONTROL
D10-9	:VIDEO DATA BUS
DICK	:27MHz CLOCK
FFWON	:SYNCHRONIZE SYSTEM FLYWHEEL/DIRECT SELECT
FIFORSTW, FIFORX, FIFOWCK, FIFOWIN	:SELF-DIAGNOSIS
HIZ	:OUTPUT SYSTEM HI-IMPEDANCE CONTROL
INDEXDEL	:INX DELETE CONTROL
INDEXENA	:INX ENABLE CONTROL
INXBOB2	:INX CONTROL
INXBB0, 1	:MOTOR CONTROL
LIM	:LIMITER ON/OFF CONTROL
SEL	:LIMITER MODE SELECT
TCH01-02, TCLR, TCNT, TFCK, TFCNT, THCNT, THCOR, TSTENA	:FOR TEST
TRSMODE	:TRS DETECT MODE SELECT
TWV	:NOT CONSECUTIVE DETECT CONTROL
VDMUTE	:MUTE CONTROL
VFMD	:52% V HYSTERESIS PROCESS
XCOR	:TRS XY-BYTE PROCESS

OUTPUT

CF0-2	:COLOR FRAME
CRCC	:CLASS 2-1CRCC1CF0/RFODET
D0-9	:INTERNAL DATA INFORMATION
FFW, TFW	:FLYWHEEL STATUS
FFWCONT	:FLY/DIRECT SYNCHRONIZE SELECT CONTROL
FMX	:F COUNTER PULSE STATE
FREERUN	:ERROR STATUS OF INX FOUR CONSECUTIVE TIMES
INDEXCOM	:COMPOSITE/COMPONENT SIGNAL
KAH	:ANALOG SYNCHRONIZE
KCK	:13.5MHz CLOCK
KF	:KF
KHHD	:H SYNCHRONIZE
KVVD	:V SYNCHRONIZE
LST0	:525/625 DETECT
PERROR	:SELF-DIAGNOSIS DETECT
POUT	:SELF-DIAGNOSIS PARITY BETWEEN BOARD
SEPCK1	:6.75MHz CLOCK
TRSDET	:TRS DETECT
VD0-9	:VIDEO DATA BUS
VDEOR	:VIDEO DATA EOR
XER	:TRS XY-BYTE HAMMING PROCESS

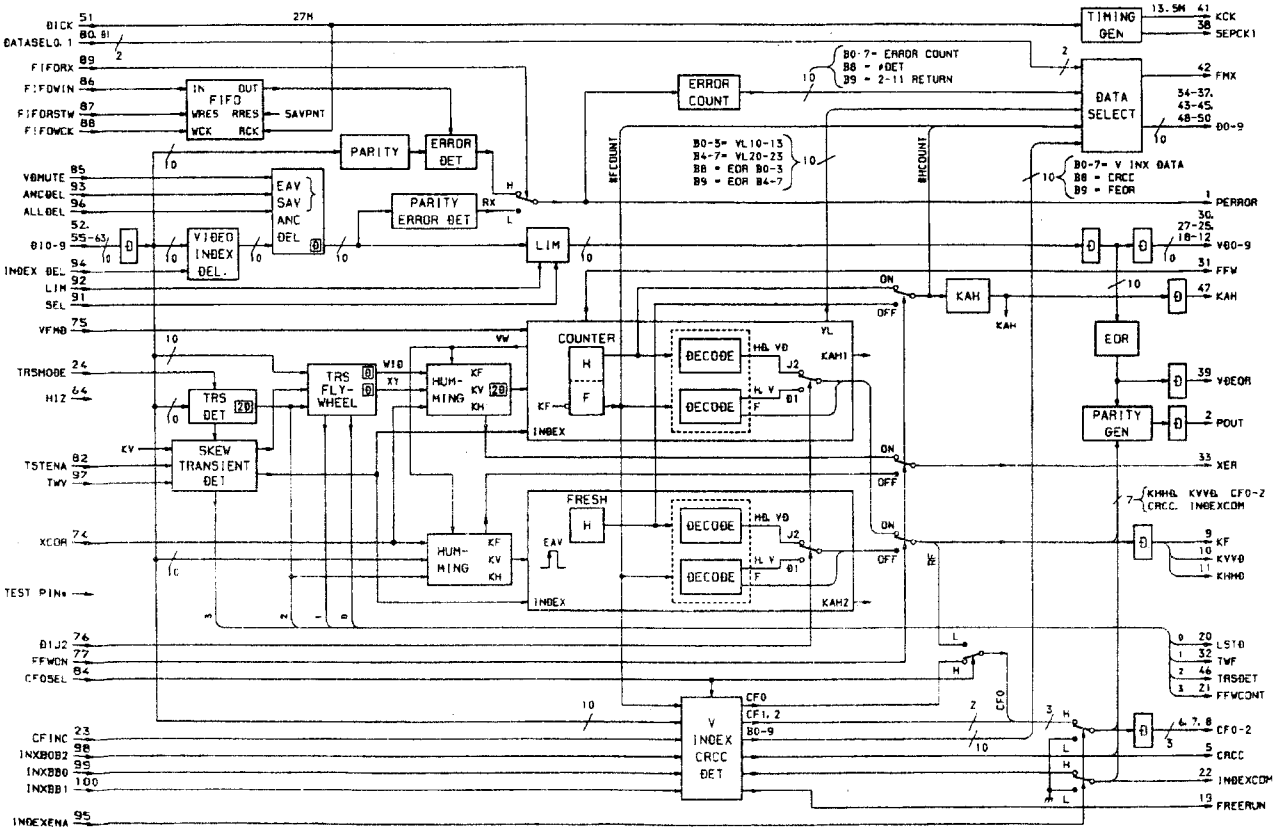

CXD8382BQ (SONY)

C-MOS DIGITAL ENCODER
– TOP VIEW –

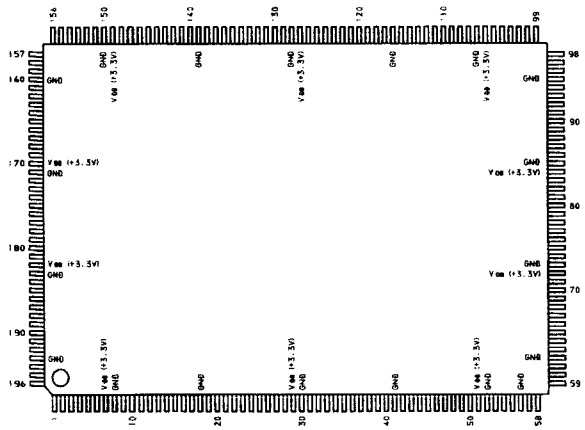

INPUT

CA00R 0-2	:SCH SETUP OF OUTPUT SIGNAL
CK 8FSC	:STANDARD CLOCK FOR 8fsc MODE
CK27	:STANDARD CLOCK FOR 27MHz MODE
00 SCK	:CLOCK FOR SERIAL COMMUNICATION BETWEEN MICROCOMPUTER
00 START	:STATUS PULSE FOR SERIAL COMMUNICATION BETWEEN MICROCOMPUTER
ICA00R 0-3	:ADDRESS AUTHORIZE
MODE DATA	:DATA FOR SERIAL COMMUNICATION BETWEEN MICROCOMPUTER
PAL/NTSC	:INITAL SETUP
PB CF	:COLOR FRAME (3-BIT) OF IMAGE DATA
PB DATA 00-09	:IMAGE DATA
PB H0	:H0 OF IMAGE DATA
PB V0	:V0 OF IMAGE DATA
PB PARITY	:PARITY BIT OF IMAGE DATA
POWER ON RESET	:RESET TERMINAL
REF CF	:COLOR FRAME OF REFERENCE
REF H0	:H0 OF REFERENCE
REF V0	:V0 OF REFERENCE

OUTPUT

A00 CHECK	:CLOCK FOR SERIAL COMMUNICATION RECEIVE CHECK BETWEEN MICROCOMPUTER
BBRST 0-9	:DIGITAL DATA FOR BLACK BURST
CK 4FSC	:4fsc CLOCK AT 8fsc COUNT DOWN
CLAMP P	:CLAMP PULSE
CMPNTB 0-9	:COMPONENT B DIGITAL DATA
CMPNTR 0-9	:COMPONENT R DIGITAL DATA
CMPNTY 0-9	:COMPONENT Y DIGITAL DATA
CMPSTE 0-9	:COMPOSITE DIGITAL DATA
00DATA 0-9	:IMAGE DATA AT 01 OUTPUT MODE, 02 DATA AT 02 OUTPUT MODE
D PARITY	:PARITY BIT FOR DIGITAL DATA
01 H0	:H0 OF 27MHz PHASE AGREE WITH 00DATA
00CF 0	:ON THE BIT0 OF COLOR FRAME AT 01 AND 02 OUTPUT MODE
00CF 1	:COLOR FRAME (3-BIT) AT 01 OUTPUT MODE. ON THE BIT1 OF COLOR FRAME AT 02 OUTPUT MODE
00 CF 2	:ON THE BIT2 OF COLOR FRAME AT 02 OUTPUT MODE
0PB CF 0-2	:PB CF DECODED DATA
0REF CF 0-2	:REF CF DECODED DATA
F4 H0	:H0 MAKE OF 4fsc
FAIH0	:H0 OF 27MHz SYNC PHASE AGREE WITH ANALOG DATA
H.H MUTE	:MAKE GATE FAIH0
HSHIFT	:H SHIFT MODE
R0A00R	:FIFO READ ADDRESS MSB DATA FOR RATE CONVERT
STS0ATA	:RESPONCE FOR SERIAL COMMUNICATION BETWEEN MICTOCOMPUTER
VSHIFT	:V SHIFT MODE
VISC 0-9	:VISC DIGITAL DATA
WCK4FSC	:4fsc CLOCK FOR RATE CONVERT
WRA00R	:FIFO WRITE ADDRESS MSB DATA FOR RATE CONVERT

(Vee=+3.3V)

PIN No.	I/O	SIGNAL	PIN No.	I/O	SIGNAL	PIN No.	I/O	SIGNAL	PIN No.	I/O	SIGNAL	PIN No.	I/O	SIGNAL
1	I	REF H0	41	-	GND	81	-	*	121	O	CMPNTB 0	161	I	CK8FSC
2	I	REF V0	42	O	00ATA 5	82	I	T04	122	O	CMPNTB 1	162	O	F4H0
3	I	REF CF	43	O	00ATA 6	83	I	T05	123	O	CMPNTB 2	163	I	PAL/NTSC
4	I	T00	44	O	00ATA 3	84	-	Vee	124	O	CMPNTB 3	164	I	TSEL 1
5	I	T01	45	O	00ATA 2	85	-	GND	125	O	CMPNTB 4	165	I	TSEL 2
6	I	T02	46	O	00ATA 1	86	O	CMPSTE 5	126	O	CMPNTB 5	166	I	TSEL 3
7	-	Vee	47	O	00ATA 0	87	O	CMPSTE 6	127	-	Vee	167	I	MUTE/TSEL4
8	-	GND	48	I	T12	88	O	CMPSTE 7	128	-	GND	168	I	TSEL 5
9	I	POWER ON RESET	49	O	01 H0	89	O	CMPSTE 8	129	O	CMPNTB 6	169	I	TSEL 6
10	I	T26	50	O	00CF 2	90	O	CMPSTE 9	130	O	CMPNTB 7	170	-	Vee
11	I	PB DATA 09	51	-	Vee	91	I	T14	131	O	CMPNTB 8	171	-	GND
12	I	PB DATA 08	52	-	GND	92	O	CMPNTY 0	132	O	CMPNTB 9	172	I	TSEL 7
13	I	PB DATA 07	53	O	00CF 1	93	O	CMPNTY 1	133	O	CLAMP P	173	O	0REF CF 0
14	I	PB DATA 06	54	O	00CF 0	94	O	CMPNTY 2	134	I	T22	174	O	0REF CF 1
15	I	PB DATA 05	55	O	0PRITY	95	-	GND	135	I	T23	175	O	0REF CF 2
16	I	PB DATA 04	56	O	02SYNC	96	O	CMPNTY 3	136	I	CA00R 0	176	O	0PB CF 0
17	I	PB DATA 03	57	I	T13	97	O	CMPNTY 4	137	I	CA00R 1	177	O	0PB CF 1
18	-	GND	58	O	VISC 0	98	O	CMPNTY 5	138	I	CA00R 2	178	O	0PB CF 2
19	I	PB DATA 02	59	O	VISC 1	99	O	CMPNTY 6	139	-	GND	179	I	T33
20	I	PB DATA 01	60	O	VISC 2	100	O	CMPNTY 7	140	I	T24	180	I	T34
21	I	PB DATA 00	61	O	VISC 3	101	O	CMPNTY 8	141	O	BBRST 0	181	I	T26
22	I	PB H0	62	-	GND	102	O	CMPNTY 9	142	O	BBRST 1	182	-	Vee
23	I	PB V0	63	O	VISC 4	103	I	T17	143	O	BBRST 2	183	-	GND
24	I	PB CF	64	O	VISC 5	104	I	T18	144	O	BBRST 3	184	O	WCK4FSC
25	I	PB PARITY	65	O	VISC 6	105	-	Vee	145	O	BBRST 4	185	I	T27
26	I	T03	66	O	VISC 7	106	-	GND	146	O	BBRST 5	186	I	00 START
27	O	WRA00R	67	O	VISC 8	107	I	T19	147	O	BBRST 6	187	I	00 SCK
28	O	R0A00R	68	O	VISC 9	108	O	CMPNTR 0	148	O	BBRST 7	188	I	MODE DATA
29	-	Vee	69	I	T14	109	O	CMPNTR 1	149	-	Vee	189	O	STS0ATA
30	-	GND	70	O	HSHIFT	110	O	CMPNTR 2	150	-	GND	190	O	A-00 CHECK
31	I	T06	71	O	VSHIFT	111	O	CMPNTR 3	151	O	BBRST 8	191	I	T29
32	I	T07	72	-	Vee	112	O	CMPNTR 4	152	O	BBRST 9	192	I	T30
33	I	T08	73	-	GND	113	O	CMPNTR 5	153	I	T25	193	-	GND
34	I	T09	74	O	CK 4FSC	114	O	CMPNTR 6	154	O	FAIH0	194	I	CK27
35	I	T10	75	I	T15	115	O	CMPNTR 7	155	O	H.H MUTE	195	I	T31
36	I	T11	76	O	CMPSTE 0	116	-	GND	156	I	ICA00R 0	196	I	T32
37	O	00ATA 9	77	O	CMPSTE 1	117	O	CMPNTR 8	157	I	ICA00R 1			
38	O	00ATA 8	78	O	CMPSTE 2	118	O	CMPNTR 9	158	I	ICA00R 2			
39	O	00ATA 7	79	O	CMPSTE 3	119	I	T20	159	I	ICA00R 3			
40	O	00ATA 6	80	O	CMPSTE 4	120	I	T21	160	-	GND			

*Connect Pin81 to the ground.

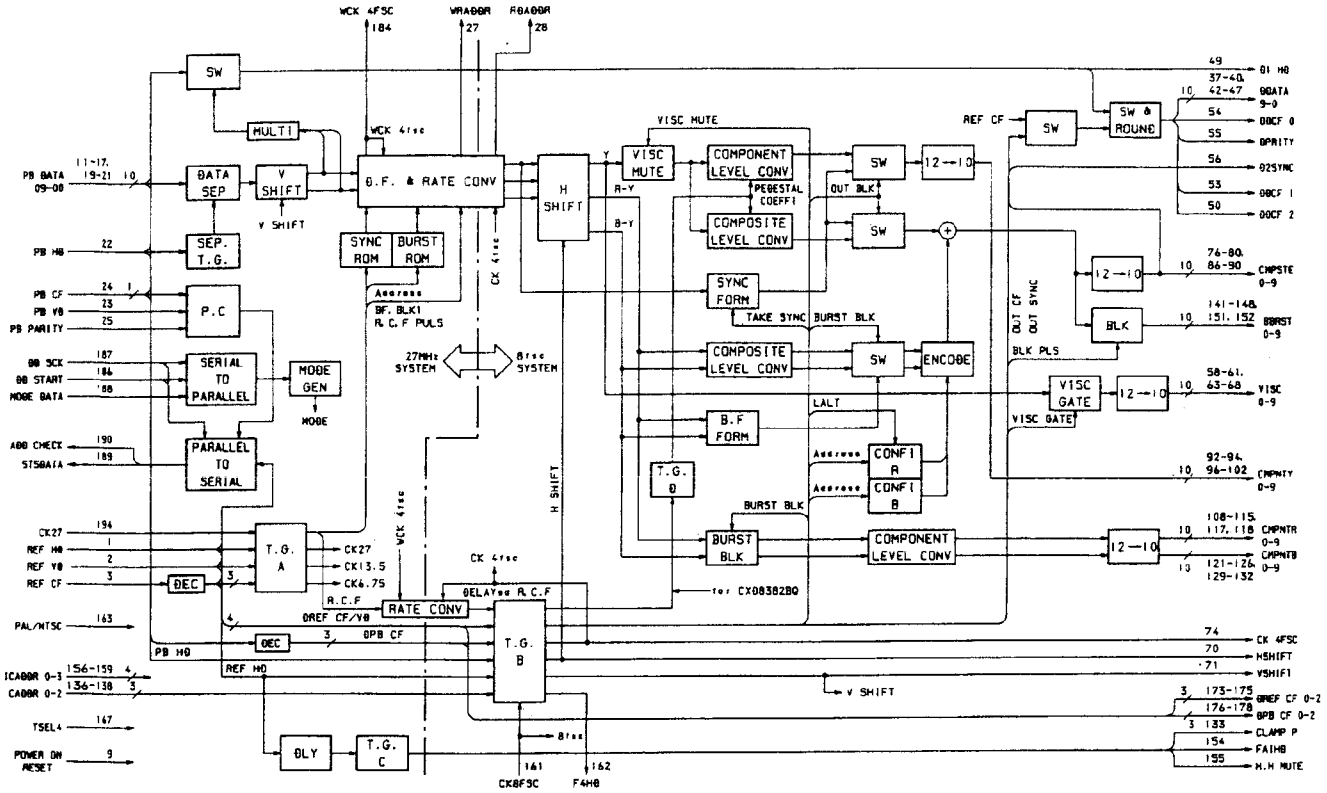
WCK 4FSC
184
WRADDR
27
RDADDR
28
SW
MULTI
WCK 4fsc
PB DATA
09-00
11-17,
19-21
10
DATA SEP
V SHIFT
V SHIFT
D.F. & RATE CONV
H SHIFT
Y
R-Y
B-Y
VISC MUTE
VISC MUTE
COMPONENT LEVEL CONV
PEDESTAL COEFFI
COMPOSITE LEVEL CONV
SW
12→10
OUT BLK
SW
REF CF
SW
SW & ROUND
49
D1 HD
37-40,
42-47
DDATA
9-0
54
DDCF 0
55
DPRITY
56
D2SYNC
53
DDCF 1
50
DDCF 2
PB HD
22
SEP. T.G.
SYNC ROM
BURST ROM
CK 4fsc
Address
BF. BLK1
R.C.F PULS
PB CF
24
PB VD
23
PB PARITY
25
P.C
SYNC FORM
TAKE SYNC
BURST BLK
12→10
76-80,
86-90
CMPSTE
0-9
OUT CF
OUT SYNC
BLK
141-148,
151, 152
BBRST
0-9
DD SCK
187
DD START
186
MODE DATA
188
SERIAL TO PARALLEL
MODE GEN
MODE
27MHz SYSTEM
8fsc SYSTEM
COMPOSITE LEVEL CONV
SW
ENCODE
BLK PLS
VISC GATE
12→10
58-61,
63-68
VISC
0-9
VISC GATE
ADD CHECK
190
STSDATA
189
PARALLEL TO SERIAL
B.F FORM
LALT
T.G. D
Address
CONFI R
Address
CONFI B
92-94,
96-102
CMPNTY
0-9
H SHIFT
BURST BLK
CK27
194
REF HD
1
REF VD
2
REF CF
3
T.G. A
CK27
CK13.5
CK6.75
DEC
3
WCK 4fsc
CK 4fsc
DELAYed R.C.F
BURST BLK
COMPONENT LEVEL CONV
12→10
108-115,
117, 118
CMPNTR
0-9
121-126,
129-132
CMPNTB
0-9
R.C.F
RATE CONV
for CX08382BQ
PAL/NTSC
163
4
DREF CF/VD
DEC
3
DPB CF
T.G. B
74
CK 4FSC
70
HSHIFT
71
VSHIFT
PB HD
REF HD
ICADDR 0-3
156-159
CADDR 0-2
136-138
V SHIFT
3
173-175
DREF CF 0-2
176-178
DPB CF 0-2
TSEL4
167
3
133
CLAMP P
154
FAIHD
155
H.H MUTE
POWER ON RESET
9
DLY
T.G. C
8fsc
161
162
CK8FSC
F4HD

CXD8384Q (SONY)

C-MOS LTC READER/GENERATOR
– TOP VIEW –

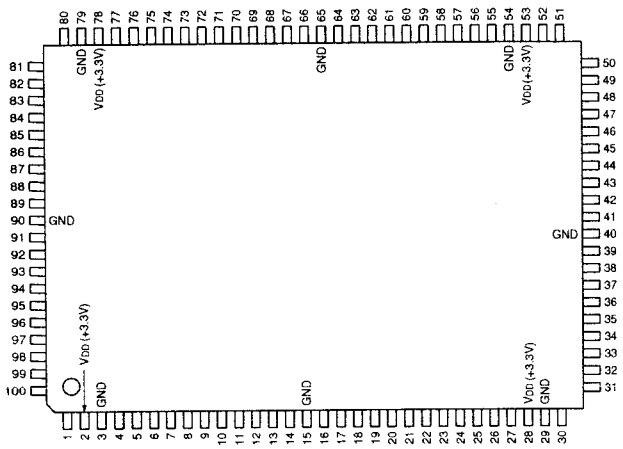

(VDD=+3.3V)

PIN No.	I/O	SIGNAL	PIN No.	I/O	SIGNAL	PIN No.	I/O	SIGNAL	PIN No.	I/O	SIGNAL
1	I/O	D2	26	I	CTLI	51	I	FRMI	76	O	INTG
2	I/O	D3	27	I	FWD	52	I	LSHI	77	O	INTL
3	-	VDD	28	-	VDD	53	-	VDD	78	-	VDD
4	-	GND	29	-	GND	54	-	GND	79	-	GND
5	I/O	D4	30	O	RSYC	55	O	LSHO	80	O	INTC
6	I/O	D5	31	O	LREV	56	O	VCEO	81	O	INTR
7	I/O	D6	32	O	DCLK	57	I	VCI1	82	O	INTX
8	I/O	D7	33	O	DATA	58	I	VCI2	83	I	TEST1
9	I	$\overline{CS}$	34	O	BER	59	O	LTCO	84	I	TEST2
10	I	$\overline{WR}$	35	I	DMCK	60	O	CFNG	85	I	TEST3
11	I	$\overline{RD}$	36	I	DEMI	61	I	REF	86	I	TEST4
12	I	A0	37	I	K16I	62	O	$\overline{XOUT}$	87	I	ALCK
13	I	A1	38	O	$\overline{XBK}$	63	O	PORT	88	O	CK2M
14	I	A2	39	I	$\overline{BKIN}$	64	I	NORM	89	I	CK1I
15	-	GND	40	-	GND	65	-	GND	90	-	GND
16	I	A3	41	O	BKO	66	O	NT4F	91	O	CK1O
17	I	A4	42	I	CSHD	67	O	PL4F	92	O	DCCK
18	I	A5	43	I	CSVD	68	O	PL8F	93	I	INTE
19	O	X1BE	44	I	HDI	69	O	PM8F	94	I	TEST5
20	I	X1TC	45	O	HDO	70	I	TEST11	95	I	TEST6
21	O	REC	46	O	VDO	71	I/O	LRRV	96	I	TEST7
22	O	OUT	47	O	IFRM	72	O	$\overline{XINT}$	97	I	TEST8
23	O	READ	48	O	FRAM	73	I	$\overline{XRES}$	98	I	TEST9
24	I	PBTC	49	I	DLYI	74	I	$\overline{BKUP}$	99	I/O	D0
25	I	LTCI	50	O	DLYO	75	O	INTM	100	I/O	D1

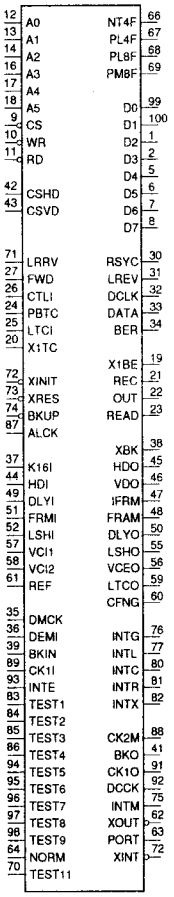

INPUT

A0-A5	; ADDRESS BUS IN
ALCK	; ARITHMETIC LOGIC UNIT CLOCK IN
BKIN	; BACKUP IN (NEGATIVE LOGIC)
BKUP	; BACKUP EXECUTION IN (NEGATIVE LOGIC)
CK1I	; SYSTEM CLOCK IN
CSHD	; COMPOSITE SYNC/HD IN
CSVD	; COMPOSITE SYNC/VD IN
CTLI	; CTL SIGNAL IN
DEMI	; LONGITUDINAL TIME AND CONTROL CODE IN
DLYI	; INPUT TO DELAY CIRCUIT
DMCK	; LTC DEMODULATE CLOCK IN
FRMI	; FRAME SIGNAL IN
FWD	; CTL DIRECTION SIGNAL IN
HDI	; HORIZONTAL SYNC INPUT
INTE	; EXTERNAL INTERRUPT IN (POSITIVE LOGIC)
K16I	; 16KHz CLOCK IN BACKUP CLOCK IN
LRRV	; DIRECTION INPUT FOR LTC READER CALCULATION
LTCI	; GENERATED LTC IN
LSHI	; LTC SYNCHRINOUS H INPUT
NORM	; NORMAL/BACKUP MODE SELECT
TEST1-TEST9, TEST11	; TEST IN
PBTC	; PLAYBACK LTC IN
RD	; READ IN (NEGATIVE LOGIC)
REF	; REFERENCE OF LTC GENERATOR
VCI1	; LTC CLOCK IN-1
VCI2	; EXTERNAL LTC IN
X1TC	; LTC CLOCK IN-2
XRES	; SYSTEM RESET IN (NEGATIVE LOGIC)
WR	; WRITE IN (NEGATIVE LOGIC)

OUTPUT

BER	; BI-PHASE MARK ERROR (BIT ERROR)
BKO	; BACKUP CONTROL OUT-2 (POSITIVE LOGIC)
CFNG	; COLOR FRAME ERROR FLAG OUT
CK1O	; SYSTEM CLOCK OUT
CK2M	; CLOCK 2M OUT
CS	; CHIP SELECT IN (NEGATIVE LOGIC)
D0-D7	; DATA BUS
DATA	; DEMODULATED SERIAL DATA OUT
DCCK	; LTC DECODE CLOCK OUT
DCLK	; DEMODULATED CLOCK OUT
DLYO	; OUTPUT FROM DELAY CIRCUIT
FRAM	; FRAME SIGNAL OUT -2
HDO	; HORIZONTAL SYNC DRIVE OUT
IFRM	; FRAME SIGNAL OUT -1
INTC	; CTL INTERRUPT OUT (POSITIVE LOGIC)
INTG	; GENERATOR INTERRUPT OUT (POSITIVE LOGIC)
INTL	; READER INTERRUPT -1 OUT (POSITIVE LOGIC)
INTM	; INTERRUPT MIX OUT (POSITIVE LOGIC)
INTR	; READER INTERRUPT -2 OUT (POSITIVE LOGIC)
INTX	; EXTERNAL LTC INTERRUPT OUT (POSITIVE LOGIC)
LREV	; READ REV/FWD BIT OUT
LSHO	; LTC SYNCHRONOUS SIGNAL H OUT
LTCO	; LTC SIGNAL OUT
NT4F, PL4F, PL8F, PM8F	; DEMODULATED COLOR FRAME OUT
OUT	; EXTERNAL OUTPUT LTC OUT
PORT	; PORT
READ	; READ LTC OUT
REC	; RECORD LTC OUT
RSYC	; READ SYNC WORD DATA OUT
VCEO	; LTC CLOCK OUT
VDO	; VERTICAL SYNC DRIVE OUT
X1BE	; BI-PHASE MARK ERROR(NORMAL SPEED READER)
XBK	; BACKUP CONTROL OUT-1 (NEGATIVE LOGIC)
XINT	; INVERTED INTERRUPT MIX OUT (NEGATIVE LOGIC)
XOUT	; INVERTED EXTERNAL OUTPUT LTC OUT

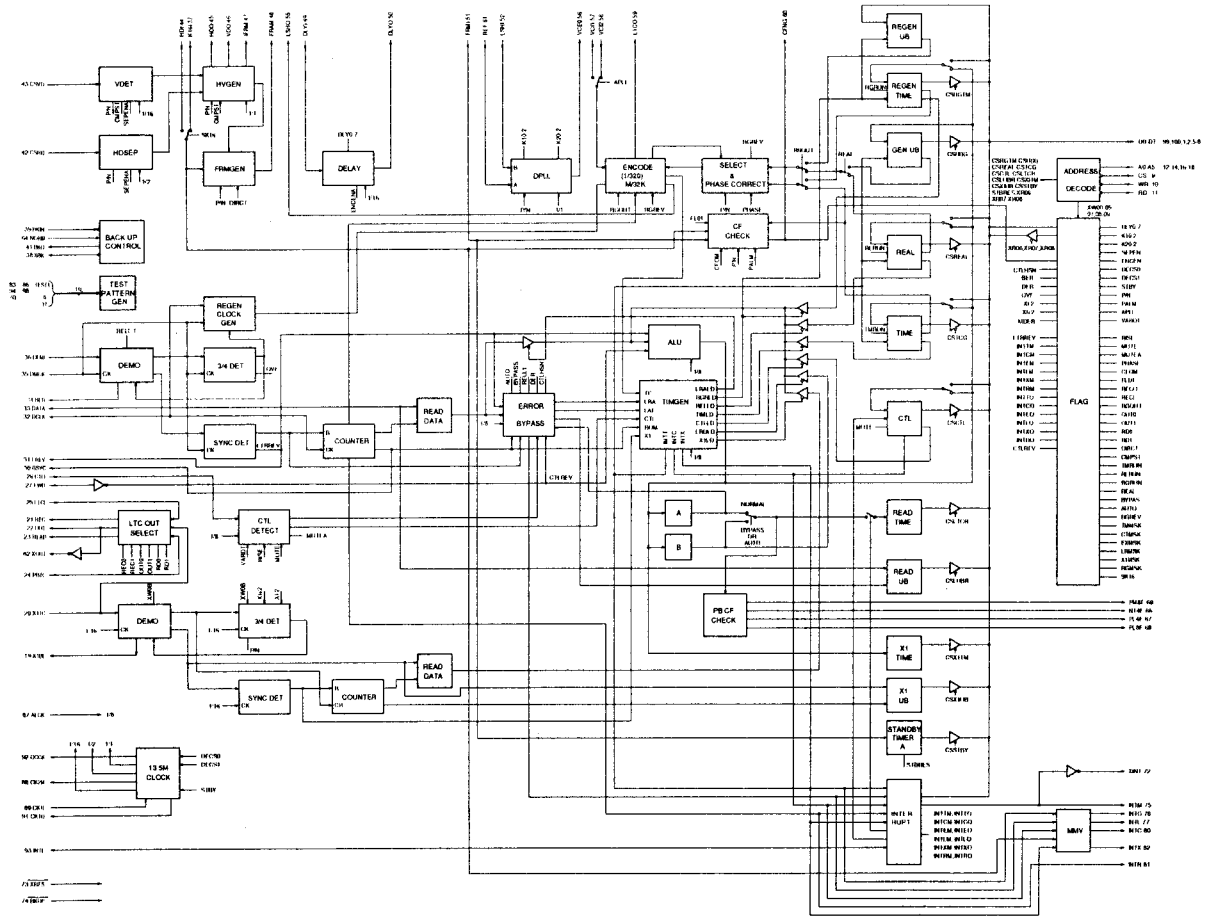
VDET
HVGEN
HDSEP
FRMGEN
DELAY
DPLL
ENCODE (1/320) M/S2K
SELECT & PHASE CORRECT
CF CHECK
REGEN UB
REGEN TIME
GEN UB
REAL
TIME
CTL
READ TIME
READ UB
X1 TIME
X1 UB
STANDBY TIMER A
ADDRESS DECODE
FLAG
BACK UP CONTROL
TEST PATTERN GEN
REGEN CLOCK GEN
DEMO
3/4 DET
SYNC DET
COUNTER
READ DATA
ERROR BYPASS
ALU
TIMGEN
A
B
PB CF CHECK
LTC OUT SELECT
CTL DETECT
13.5M CLOCK
INTERRUPT
MMV

CXD8385Q (SONY)

C-MOS ENCODER
– TOP VIEW –

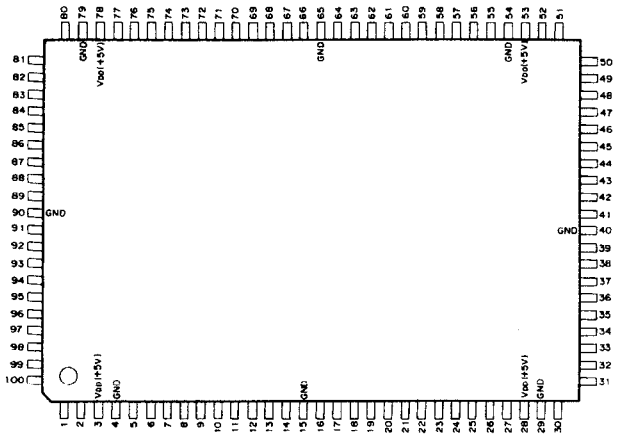

(VDD = + 5 V)

PIN No.	I/O	SIGNAL	PIN No.	I/O	SIGANL	PIN No.	I/O	SIGNAL	PIN No.	I/O	SIGNAL
1	I	ANC9	26	I	VD1	51	O	MUD0	76	O	CM5
2	I	ANC8	27	I	VD0	52	O	MUD1	77	O	CM6
3	–	VDD	28	–	VDD	53	–	VDD	78	–	VDD
4	–	GND	29	–	GND	54	–	GND	79	–	GND
5	I	ANC7	30	I	PIN	55	O	MUD2	80	O	CM7
6	I	ANC6	31	I	PARAENC	56	O	MUD3	81	O	CM8
7	I	ANC5	32	I	HDELAY0	57	O	MUD4	82	O	CM9
8	I	ANC4	33	I	HDELAY1	58	I	VIEFENA	83	O	SYNC
9	I	ANC3	34	I	INX ON/OFF	59	O	CM0	84	O	PERROR1
10	I	ANC2	35	I	VC13	60	O	TFO	85	O	PERROR2
11	I	ANC1	36	I	VC12	61	O	TVO	86	I	MD0
12	I	ANC0	37	I	TRS MODE	62	O	MUD5	87	I	MD1
13	I	EXTH	38	I	CK27	63	O	MUD6	88	O	OC6
14	I	EXTF	39	I	INX B0/B2	64	O	MUD7	89	O	OC13
15	–	GND	40	–	GND	65	–	GND	90	–	GND
16	I	CF1	41	I	VC11	66	O	MUD8	91	O	OC27
17	I	CF2	42	I	VC10	67	O	MUD9	92	I	TX
18	I	VD9	43	I	XZLD	68	O	SYNC2	93	I	COMP
19	I	VD8	44	I	TCL	69	O	MFP	94	I	CFINFO
20	I	VD7	45	I	THCNT	70	O	CM1	95	I	SEL
21	I	VD6	46	I	TFCNT	71	O	CM2	96	I	RE
22	I	VD5	47	I	TFCK	72	O	CM3	97	I	INCH
23	I	VD4	48	I	TCNTO	73	O	ANEH	98	I	D1/J2
24	I	VD3	49	O	SAVPNT	74	O	ANEV	99	I	SLNP
25	I	VD2	50	O	POUT	75	O	CM4	100	I	ANIS

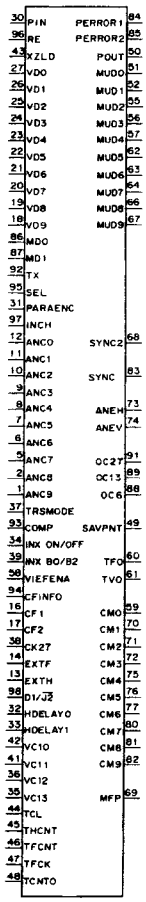

INPUT

ANC0 – ANC9	: ANCILLARY DATA
ANIS	: ANC GATE CONTROL
CF1/CF2	: CF DATA
CFINFO	: CFINFO CONTROL
CK27	: 27 MHz CLOCK
COMP	: COMPOSIT/COMPONENT
D1/J2, SLNP	: MODE CONTROL
EXTF	: REF F
EXTH	: REF H
HDELAY0, HDELAY1	: JZ REF H TRS ADVANCE CONTROL
INCH, TCL, TCNTO, TFCK, TFCNT, THCNT, XZLD	: TEST PIN
INX ON/OFF, INX B0/B2, VIEFENA	: V. INX. CONTROL
PARAENC	: SCRAMBLE NRZ CONVERT ON/OFF
PIN	: PARITY
RE	: ROUND CONTROL
TRSMODE	: TRS 10-BIT/8-BIT SELECT
TX	: TEST PIN
VC10 – VC13	: 525/60 V BLANK CONTROL
VD0 – VD9	: VIDEO DATA

OUTPUT

ANEH, ANEV	: PULSE
CM0 – CM9	: H, F COUNTER
MFP	: MULTIPLEX F COUNTER PULSE
MUD0 – MUD9	: VIDEO DATA
OC13	: 13.5 MHz CLOCK
OC27	: 27 MHz CLOCK
OC6	: 6.75 MHz CLOCK
PERROR1, PERROR2	: PARITY ERROR DETECT
POUT	: PARITY
SAVPNT	: SAV PULSE
SYNC, SYNC2	: TIMING PULSE
TFO	: F MONITOR
TVO	: V MONITOR

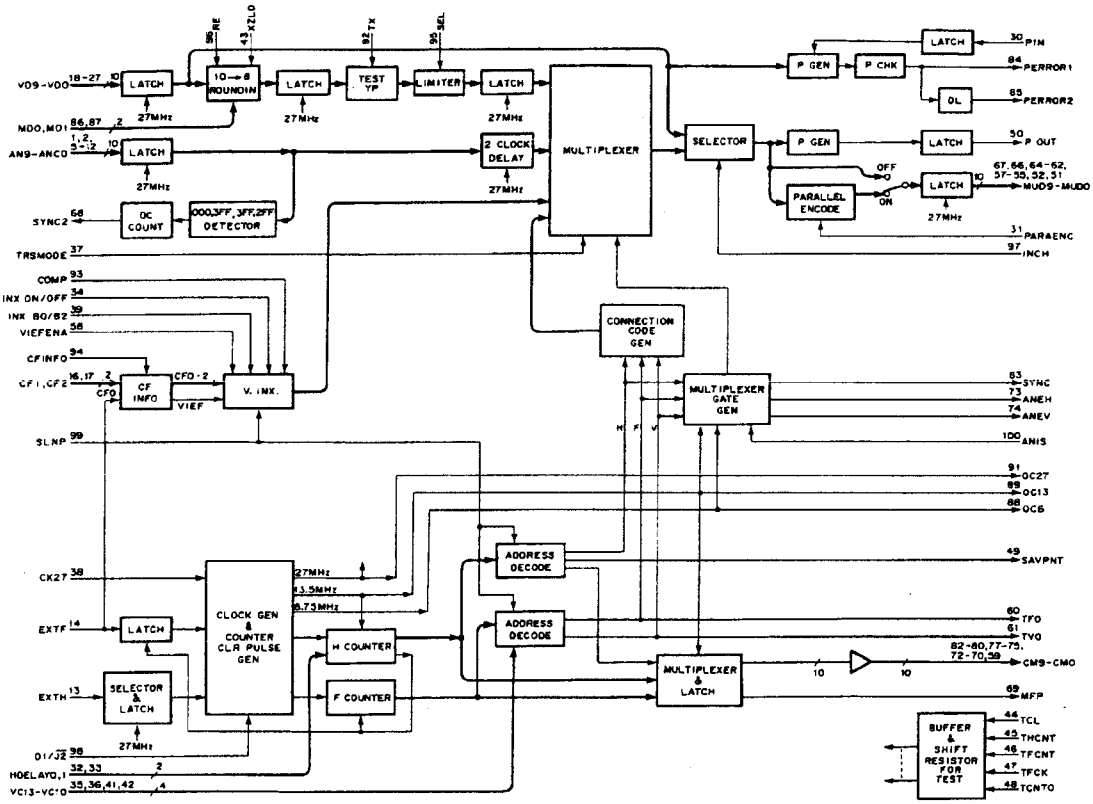
LATCH
10→8 ROUNDIN
TEST YP
LIMITER
2 CLOCK DELAY
MULTIPLEXER
SELECTOR
P GEN
P CHK
OL
PARALLEL ENCODE
OFF
ON
OC COUNT
000,3FF,3FF,2FF DETECTOR
V. INX.
CF INFO
CONNECTION CODE GEN
MULTIPLEXER GATE GEN
ADDRESS DECODE
CLOCK GEN & COUNTER CLR PULSE GEN
H COUNTER
F COUNTER
SELECTOR & LATCH
MULTIPLEXER & LATCH
BUFFER & SHIFT RESISTOR FOR TEST
27MHz
13.5MHz
6.75MHz
VD9-VD0
MD0,MD1
AN9-AN0
SYNC2
TRSMODE
COMP
INX ON/OFF
INX BG/BZ
VIEFENA
CFINFO
CF1,CF2
SLNP
CK27
EXTF
EXTH
01/32
HDELAY0,1
VC13-VC10
PTN
PERROR1
PERROR2
P OUT
MUD9-MUD0
PARAENC
INCH
SYNC
ANEH
ANEV
ANIS
OC27
OC13
OC6
SAVPNT
TFO
TVO
CM9-CM0
MFP
TCL
TMCNT
TFCNT
TFCK
TCNTO

CXD8804Q (SONY)

C-MOS 8-MPU COMMUNICATION CONTROLLER WITH PARALLEL PORT
– TOP VIEW –

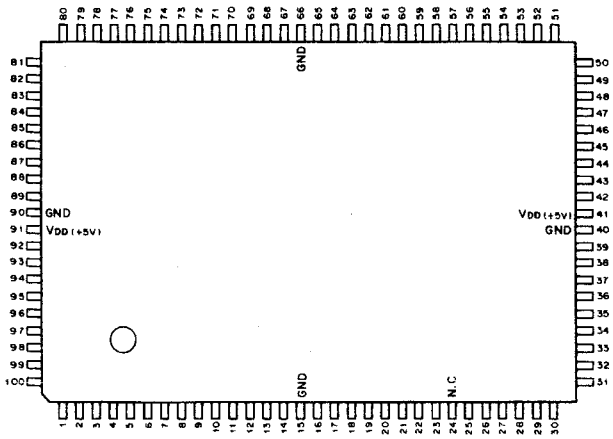

(V_{DD} = + 5 V)

PIN No.	I/O	SIGNAL	PIN No.	I/O	SIGNAL	PIN No.	I/O	SIGNAL	PIN No.	I/O	SIGNAL
1	O	OUT26	26	O	V SYNC	51	I	A0 CPU	76	I/O	D0 RAM
2	O	OUT25	27	I	VSNC LEN	52	O	$\overline{WAIT}$	77	O	A12 RAM
3	O	OUT24	28	I	HV CLK	53	I	$\overline{CPU\ WR}$	78	O	A11 RAM
4	O	OUT23	29	I	HD	54	I	$\overline{CPU\ RD}$	79	O	A10 RAM
5	O	OUT22	30	I	VD	55	I	$\overline{MPUIF\ CS}$	80	O	A9 RAM
6	O	OUT21	31	I	S PULS IN	56	I	$\overline{CONT\ CS}$	81	O	A8 RAM
7	O	OUT20	32	O	S PULS OUT	57	I/O	D7 CPU	82	O	A7 RAM
8	O	INT	33	I	$\overline{TES\ 1}$	58	I/O	D6 CPU	83	O	A6 RAM
9	I	H SNC	34	I	$\overline{P\ ON\ RST}$	59	I/O	D5 CPU	84	O	A5 RAM
10	I	S RDY	35	I	SYSTEM CK	60	I/O	D4 CPU	85	O	A4 RAM
11	I	S RESP	36	I	CPU CK	61	I/O	D3 CPU	86	O	A3 RAM
12	O	SCK	37	I	A12 CPU	62	I/O	D2 CPU	87	O	A2 RAM
13	O	SCMD	38	I	A11 CPU	63	I/O	D1 CPU	88	O	A1 RAM
14	O	STRB	39	I	A10 CPU	64	I/O	D0 CPU	89	O	A0 RAM
15	–	GND	40	–	GND	65	O	$\overline{RAM\ WR}$	90	–	GND
16	O	MPUCS7	41	–	V_{DD}	66	–	GND	91	–	V_{DD}
17	O	MPUCS6	42	I	A9 CPU	67	O	$\overline{RAM\ OE}$	92	I	INP 07
18	O	MPUCS5	43	I	A8 CPU	68	O	$\overline{RAM\ CE}$	93	I	INP 06
19	O	MPUCS4	44	I	A7 CPU	69	I/O	D7 RAM	94	I	INP 05
20	O	MPUCS3	45	I	A6 CPU	70	I/O	D6 RAM	95	I	INP 04
21	O	MPUCS2	46	I	A5 CPU	71	I/O	D5 RAM	96	I	INP 03
22	O	MPUCS1	47	I	A4 CPU	72	I/O	D4 RAM	97	I	INP 02
23	O	MPUCS0	48	I	A3 CPU	73	I/O	D3 RAM	98	I	INP 01
24	–	N.C	49	I	A2 CPU	74	I/O	D2 RAM	99	I	INP 00
25	O	H SYNC	50	I	A1 CPU	75	I/O	D1 RAM	100	O	OUT 27

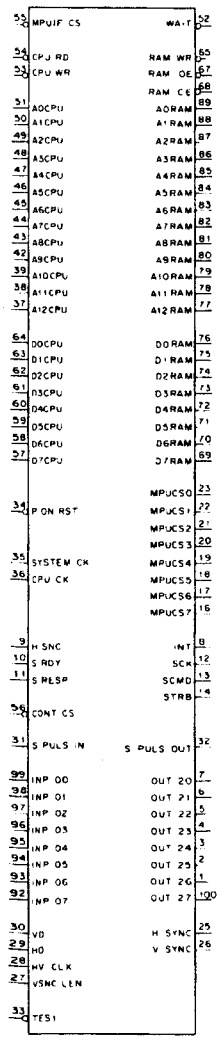

INPUT

A0CPU – A12CPU	: CPU ADDRESS BUS
CONT CS	: INTERNAL/PARALLEL PORT
CPU CK	: CPU CLOCK
CPU RD	: CPU READ STROBU
CPU WR	: CPU WRITE STROBU
HD	: VIDEO HORIZONTAL SYNCHRONIZING PULSE
H SNC	: SIRIAL RECEVE WAIT
HV CLK	: VIDEO VERTICAL SAMPLING PULSE (13.5 MHz)
INP 00 – 07	: PARALLEL PORT
MPUIF CS	: EXTERNAL RAM CHIP SELECT
P ON RST	: POWER IN RESET (L)
S PULS	: MEDIOCRITY CLOCK PULSE
S RDY	: SIRIAL TRANSMISSION LEADY
S RESP	: SIRIAL RECEVE DATA
SYSTEM CK	: SYSTEM CLOCK
TES 1	: TEST (L)
VD	: VIDEO VERTICAL SYNCHRONIZING PULSE
VSNC LEN	: VIDEO VERTICAL SYNCHRONIZING PULSE OUTPUT WIDTH CONTROL

OUTPUT

A0RAM – A12RAM	: EXTERNAL RAM ADDRESS BUS
H SYNC	: VIDEO HORIZONTAL SYNCHRONIZING PULSE
INT	: SIRIAL RECEVE END
MPUCS0 – MPUCS7	: SIRIAL CORRESPONDENCE ENABLE
OUT 20 – 27	: PARALLEL PORT
RAM CE	: EXTERNAL RAM CHIP SELECT
RAM OE	: EXTERNAL RAM OUTPUT ENABLE
RAM WR	: EXTERNAL RAM WRITE STROBE
SCK	: SIRIAL CORRESPONDENCE CLOCK
SCMD	: SIRIAL TRANSMISSION DATA
S PULS	: MEDIOCRITY CLOCK PULSE FREQUENCY (1/2 – 1/27)
STRB	: SIRIAL TRANSMISSION STROBE
V SYNC	: VIDEO VERTICAL SYNCHRONIZING PULSE
WAIT	: CPU WAIT

INPUT/OUTPUT

D0CPU – D7CPU	: CPU DATA BUS
D0RAM – D7RAM	: EXTERNAL RAM DATA BUS

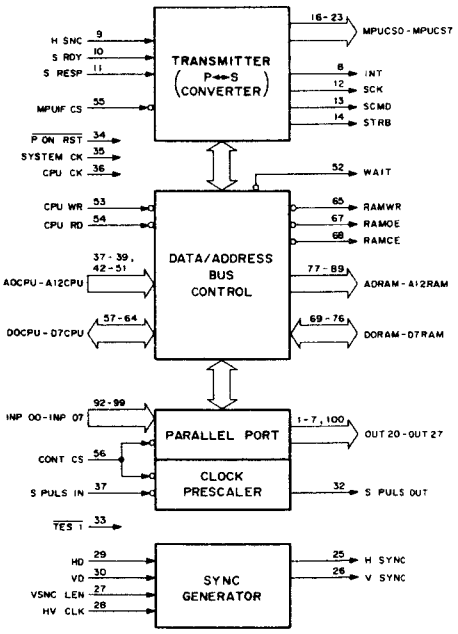

CXD8805Q (SONY)

C-MOS RF BLOCK DIGITAL CONTROL INTERFACE
– TOP VIEW –

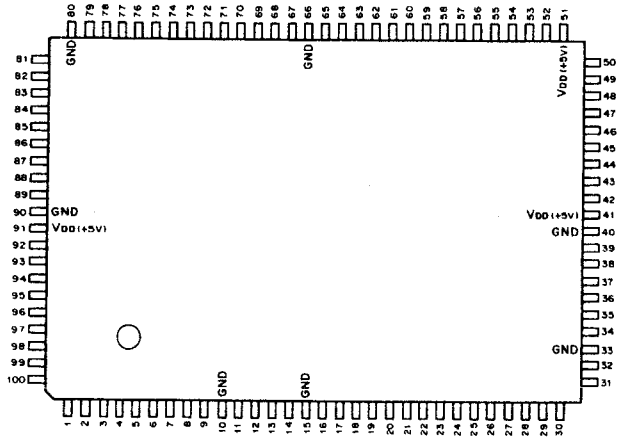

(VDD = + 5V)

PIN No.	I/O	SIGNAL	PIN No.	I/O	SIGNAL	PIN No.	I/O	SIGNAL	PIN No.	I/O	SIGNAL
1	I	SACN	26	O	$\overline{ICS1}$	51	–	VDD	76	I/O	D3L
2	I	SAAD	27	O	$\overline{ICS0}$	52	I	CP14	77	I/O	D2L
3	I	SBCN	28	O	D GND	53	I	CP13	78	I/O	D1L
4	I	SBAD	29	O	XIN1	54	I	CP12	79	I/O	D0L
5	I	TES1	30	I	XIN0	55	I	CP11	80	–	GND
6	I	MACN	31	O	XOU2	56	I	CP10	81	O	$\overline{WEM}$
7	I	MAAD	32	O	XOUT	57	I	CP9	82	O	$\overline{OEM}$
8	I	MBCN	33	–	GND	58	I	CP8	83	O	$\overline{CEM}$
9	I	MBAD	34	O	$\overline{MPS1}$	59	I	A7L	84	I/O	D7M
10	–	GND	35	O	$\overline{MPS0}$	60	I	A6L	85	I/O	D6M
11	O	REAC	36	O	$\overline{RFIF}$	61	I	A5L	86	I/O	D5M
12	O	DACE	37	O	$\overline{SRAM}$	62	I	A4L	87	I/O	D4M
13	O	SCK	38	O	$\overline{CRAM}$	63	I	A3L	88	I/O	D3M
14	O	SOUT	39	O	$\overline{RACS}$	64	I	A2L	89	I/O	D2M
15	–	GND	40	–	GND	65	I	A1L	90	–	GND
16	O	STB3	41	–	VDD	66	–	GND	91	–	VDD
17	O	STB2	42	O	$\overline{ROSK}$	67	I	A0L	92	I/O	D1M
18	O	STB1	43	O	$\overline{ROSJ}$	68	O	$\overline{WAIL}$	93	I/O	D0M
19	O	NVRM	44	O	$\overline{ROCS}$	69	I	$\overline{WRL}$	94	O	A6M
20	O	$\overline{ICS7}$	45	I	CLK	70	I	$\overline{WRD}$	95	O	A5M
21	O	$\overline{ICS6}$	46	O	C OUT	71	I	$\overline{MREQ}$	96	O	A4M
22	O	$\overline{ICS5}$	47	I	SYCK	72	I/O	D7L	97	O	A3M
23	O	$\overline{ICS4}$	48	I	PRST	73	I/O	D6L	98	O	A2M
24	O	$\overline{ICS3}$	49	I	CP19	74	I/O	D5L	99	O	A1M
25	O	$\overline{ICS2}$	50	I	CP17	75	I/O	D4L	100	O	A0M

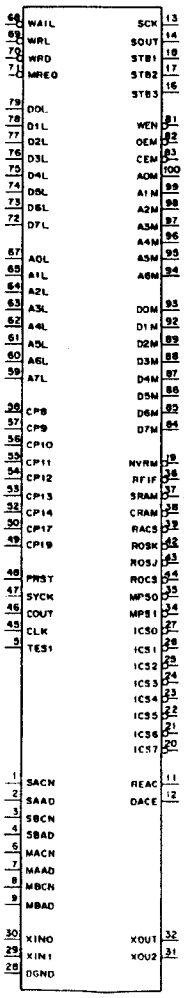

INPUT

A0L – A7L	; CPU ADDRESS BUS (LOW ORDER)
CLK	; CPU CLOCK
CP8 – CP14, CP17, CP19	; CPU ADDRESS BUS (UPPER ORDER)
D GND	; CRYSTAL OSCILLATOR CIRCUIT GND
MAAD	; METRIC PULSE INPUT ADV – AC
MACN	; METRIC PULSE INPUT CONFI – AC
MBAD	; METRIC PULSE INPUT ADV – BD
MBCN	; METRIC PULSE INPUT CONFI – BD
MREQ	; CPU MEMORY REQUEST
PRST	; POWER ON RESET
SAAD	; HEAD SELECT INPUT ADV – AC
SACN	; HEAD SELECT INPUT CONFI – AC
SBAD	; HEAD SELECT INPUT ADV – BD
SBCN	; HEAD SELECT INPUT CONFI – BD
SYCK	; SYSTEM CLOCK
WRD	; CPU READ STROBE
WRL	; CPU WRITE STROBE
XIN0	; CRYSTAL INPUT 0
XIN1	; CRYSTAL INPUT 1

OUTPUT

A0M – A6M	; EXTERNAL RAM ADDRESS BUS
CEM	; EXTERNAL RAM CHIP SELECT
COUT	; CKL INPUT 2FREQUENCY
CRAM	; ADDRESS DECODER
DACE	; METRIC DATA COUNT END
ICS0 – ICS7	; ADDRESS DECODER
MPS0, MPS1	; ADDRESS DECODER
NVRM	; ADDRESS DECODER
OEM	; EXTERNAL OUTPUT ENABLE
RACS	; ADDRESS DECODER
REAC	; METRIC DATA A/C DETECTOR
RFIF	; ADDRESS DECODER
ROCS	; ADDRESS DECODER
ROSJ	; ADDRESS DECODER
ROSK	; ADDRESS DECODER
SCK	; SERIAL TRANSMISSION CLOCK
SOUT	; SERIAL TRANSMISSION DATA
STB1 – STB3	; SERIAL TRANSMISSION STROBE1 – 3
SRAM	; ADDRESS DECODER
WAIL	; CPU WAIT
WEM	; EXTERNAL RAM WRITE STROBE
XOUT	; CRYSTAL OSCILLATOR OUTPUT
XOU2	; CRYSTAL OSCILLATOR OUTPUT 2

INPUT/OUTPUT

D0L – D7L	; CPU DATA BUS
D0M – D7M	; EXTERNAL RAM DATA BUS

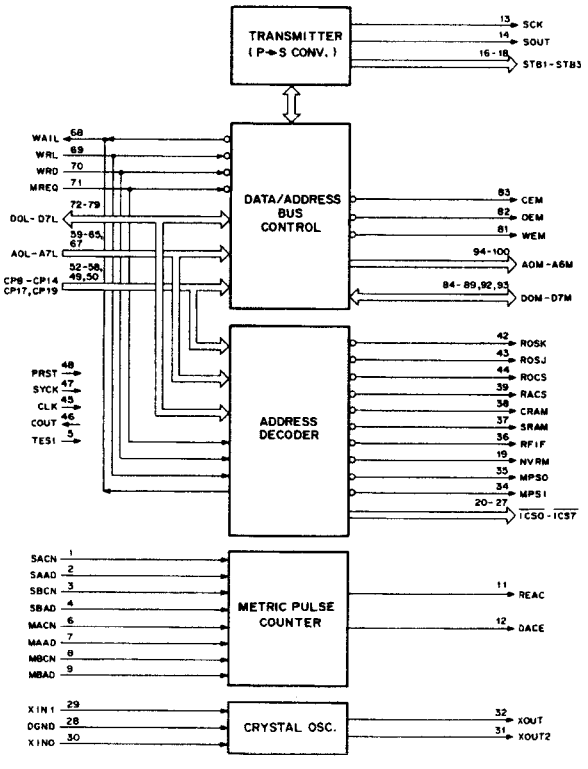

CXD8815Q (SONY)

C-MOS VITERBI DECODER
– TOP VIEW –

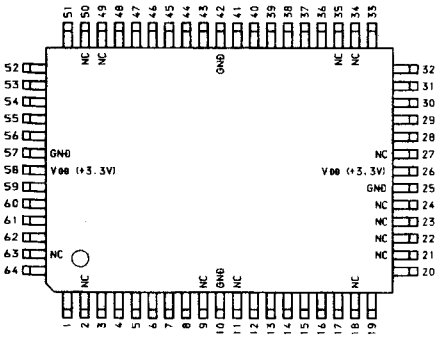

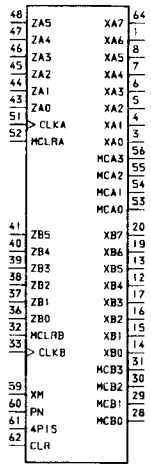

CHANNEL A
- CLKA :CLOCK OF CHANNEL A
- MCA0-3 :4 BIT METRIC COUNTER OF CHANNEL A
- MCLRA :METRIC COUNTER CLEAR OF CHANNEL A
- XA0-7 :8 BIT CHANNEL A OUT
- ZA0-5 :6 BIT CHANNEL A IN

CHANNEL B
- CLKB :CLOCK OF CHANNEL B
- MCB0-3 :4 BIT METRIC COUNTER OF CHANNEL B
- MCLRB :METRIC COUNTER CLEAR OF CHANNEL B
- XB0-7 :8 BIT CHANNEL B OUT
- ZB0-5 :6 BIT CHANNEL B IN

OTHERS
- CLR :ALL CLEAR
- PN :SELECTOR OF PR(1, 0, -1) & NRZ
- XM :SELECTOR OF DECODE & METRIC OUT
- 4PIS :SELECTOR OF 4 PARALLEL & SERIAL DATA

(VDD =+3.3V)

PIN No.	I/O	SIGNAL	PIN No.	I/O	SIGNAL	PIN No.	I/O	SIGNAL	PIN No.	I/O	SIGNAL
1	OUT	XA6	17	OUT	XB3	33	IN	CLKB	49	-	NC
2	-	NC	18	-	NC	34	-	NC	50	-	NC
3	OUT	XA0	19	OUT	XB6	35	-	NC	51	IN	CLKA
4	OUT	XA1	20	OUT	XB7	36	IN	ZB0	52	IN	MCLRA
5	OUT	XA2	21	-	NC	37	IN	ZB1	53	OUT	MCA0
6	OUT	XA3	22	-	NC	38	IN	ZB2	54	OUT	MCA1
7	OUT	XA4	23	-	NC	39	IN	ZB3	55	OUT	MCA2
8	OUT	XA5	24	-	NC	40	IN	ZB4	56	OUT	MCA3
9	-	NC	25	-	GND	41	IN	ZB5	57	-	GND
10	-	GND	26	-	VDD	42	-	GND	58	-	VDD
11	-	NC	27	-	NC	43	IN	ZA0	59	IN	XM
12	OUT	XB4	28	OUT	MCB0	44	IN	ZA1	60	IN	PN
13	OUT	XB5	29	OUT	MCB1	45	IN	ZA2	61	IN	4PIS
14	OUT	XB0	30	OUT	MCB2	46	IN	ZA3	62	IN	CLR
15	OUT	XB1	31	OUT	MCB3	47	IN	ZA4	63	-	NC
16	OUT	XB2	32	IN	MCLRB	48	IN	ZA5	64	OUT	XA7

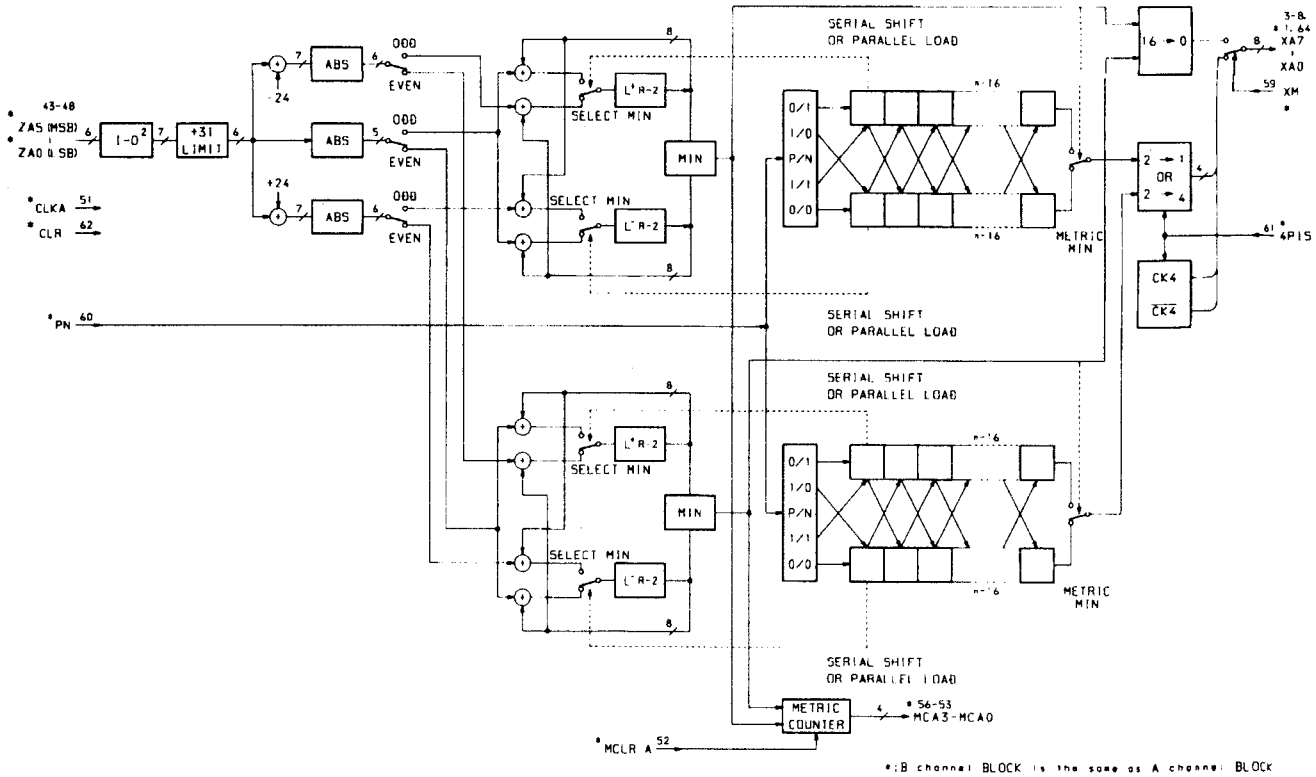

CXD8817Q (SONY)

C-MOS VIDEO TIMING SIGNAL GENERATOR
– TOP VIEW –

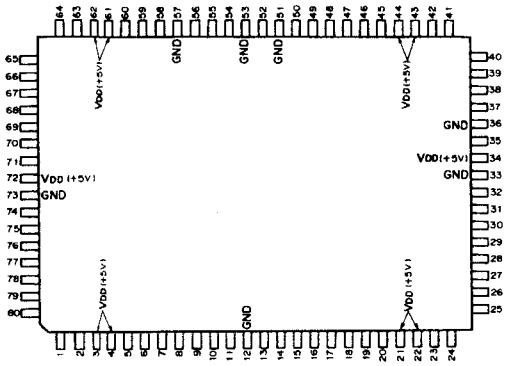

(VDD = + 5 V)

PIN No.	I/O	SIGNAL	PIN No.	I/O	SIGANL	PIN No.	I/O	SIGNAL	PIN No.	I/O	SIGNAL
1	I	AD0	21	–	VDD	41	O	SYNCD6	61	–	VDD
2	I	AD1	22	–	VDD	42	O	SYNCD5	62	–	VDD
3	–	VDD	23	–	NC	43	–	VDD	63	I	CK4FSC
4	–	VDD	24	O	DA135	44	–	VDD	64	O	SAMPP
5	I	AD2	25	O	SAWD7	45	O	SYNCD4	65	O	SAMPN
6	I	AD3	26	O	SAWD6	46	O	SYNCD3	66	O	FSC
7	I	SCK	27	O	SAWD5	47	O	SYNCD2	67	I	BURST
8	I	SIN	28	O	SAWD4	48	O	SYNCD1	68	I	SYNC
9	O	SOUT	29	O	SAWD3	49	O	SYNCD0	69	I	LOCKERR
10	I	START	30	O	SAWD2	50	O	SYNCNT	70	O	MASKSYNC
11	O	COMPSYNC	31	O	SAWD1	51	–	GND	71	I	CFSET
12	–	GND	32	O	SAWD0	52	I	D1SYNC	72	–	VDD
13	O	HDG	33	–	GND	53	–	GND	73	–	GND
14	O	VDG	34	–	VDD	54	I	CFRST	74	I	TEST
15	O	OEG	35	I	CK27	55	I	FRRST	75	O	SYNCGATE
16	O	CFG	36	–	GND	56	I	EXT4FSC	76	O	DSELECT
17	I	TEST1	37	O	DA4FSC	57	–	GND	77	I	DSYNC1
18	I	TEST2	38	O	SYNCD9	58	O	SYNCEX	78	O	DETCF
19	O	TESTOUT	39	O	SYNCD8	59	O	BURSTEX	79	I	DSYNC2
20	I	RESET	40	O	SYNCD7	60	O	BURSTG	80	O	SCH

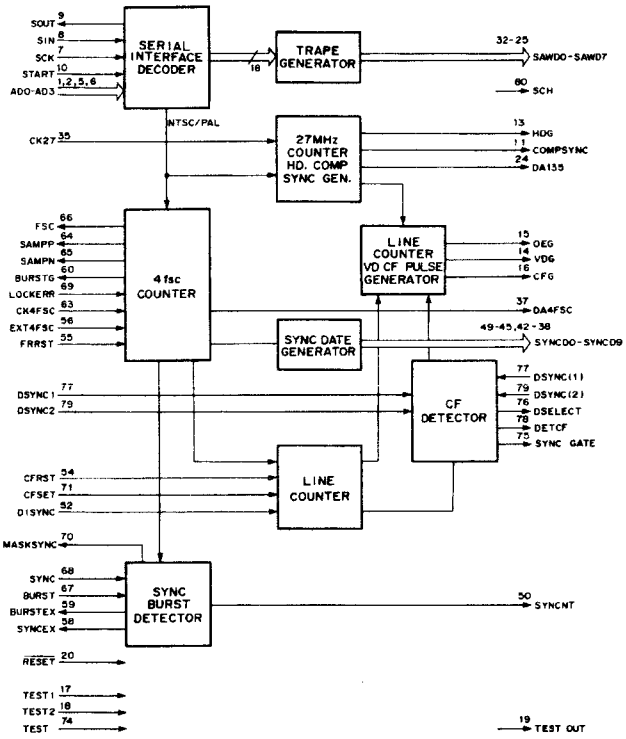

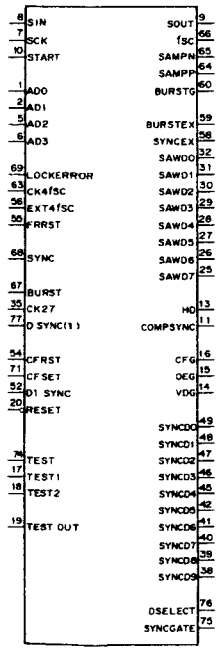

INPUT

AD0 – AD3	; SERIAL PRESET ADDRESS
BURST	; REFERENCE BURST INPUT
CFRST	; CF RESET FOR D2 LOCK
CFSET	; EXTERNAL CF PULSE INPUT
CK27	; 27MHz CLOCK
CK4FSC	; 4FSC CLOCK
D1SYNC	; D1 SYNC FOR D1 LOCK
DSYNC1	; DELAYED SYNC FOR CF DET
DSYNC2	; DELAYED SYNC FOR SCH DET
EXT4FSC	; EXTERNAL 4FSC CLOCK
FRRST	; FRAME RESET FOR D2 LOCK
LOCKERR	; 4FSC PLL LOCK ERROR
RESET	; POWER ON RESET
SCK	; SERIAL CLOCK
SIN	; SERIAL DATA INPUT
START	; SERIAL START PULSE
SYNC	; REFERENCE SYNC INPUT
TEST	; TEST PIN
TEST1, 2	; TEST PINS

OUTPUT

BURSTEX	; BURST EXIST : H
BURSTG	; BURST SAMPLE PULSE FOR NTSC
CFG	; COLOR FRAMING PULSE
COMPSYNC	; COMPOSITE SYNC
DA135	; 13.5 MHz CLOCK
DA4FSC	; 4FSC CLOCK
DETCF	; DETECTED COLOR FRAMING
DSELECT	; HYSTERESIS CONTROLE FOR CF DET
FSC	; FSC CLOCK
HDG	; HD PULSE
MASKSYNC	; GATED SYNC
OEG	; ODD/EVEN PULSE
SAMPN	; BURST SAMPLE (–) FOR PAL
SAMPP	; BURST SAMPLE (+) FOR PAL
SAWD0 – SAWD7	; 27 MHz SAW-TOOTH DATA (0 – 7)
SCH	; DETECTED SCH
SOUT	; SERIAL DATA OUTPUT
SYNCD0 – SYNCD9	; 4FSC SYNC DATA (0 – 9)
SYNCEX	; SYNC EXIST : H
SYNCGATE	; SELECTED SYNC FOR CF DET
SYNCNT	; 4FSC SYNC FOR NTSC
TESTOUT	; TEST PIN
VDG	; VD PULSE

CXD8819AQ (FUJITSU)

C-MOS DIGITAL VIDEO SIGNAL DECODER
– TOP VIEW –

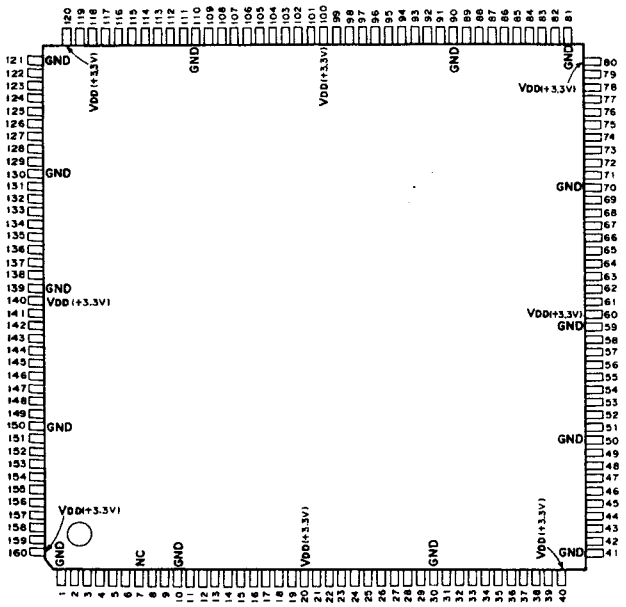

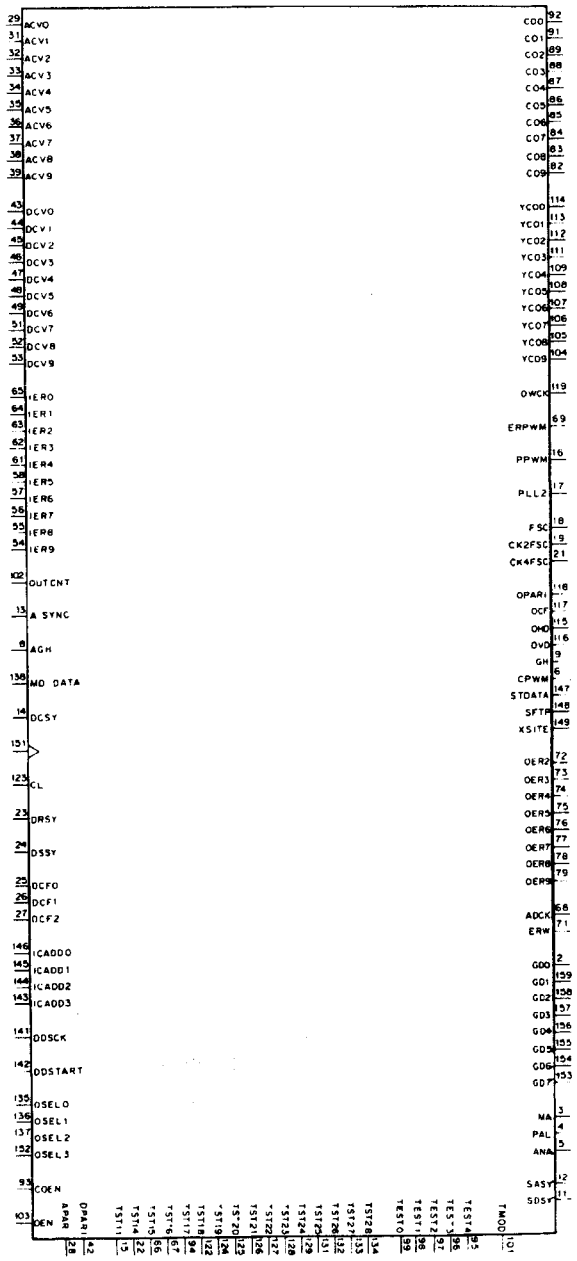

(V_{DD} = + 3.3 V)

PIN No.	I/O	SIGNAL	PIN No.	I/O	SIGNAL	PIN No.	I/O	SIGNAL	PIN No.	I/O	SIGNAL
1	–	GND	41	–	GND	81	–	GND	121	–	GND
2	O	GD0	42	I	DPARI	82	O	CO9	122	I	TST18
3	O	MA	43	I	DCV0	83	O	CO8	123	I	CL
4	O	PAL	44	I	DCV1	84	O	CO7	124	I	TST19
5	O	ANA	45	I	DCV2	85	O	CO6	125	I	TST20
6	O	CPWM	46	I	DCV3	86	O	CO5	126	I	TST21
7	–	NC	47	I	DCV4	87	O	CO4	127	I	TST22
8	I	AGH	48	I	DCV5	88	O	CO3	128	I	TST23
9	O	GH	49	I	DCV6	89	O	CO2	129	I	TST24
10	–	GND	50	–	GND	90	–	GND	130	–	GND
11	O	SDSY	51	I	DCV7	91	O	CO1	131	I	TST25
12	O	SASY	52	I	DCV8	92	O	CO0	132	I	TST26
13	I	ASYNC	53	I	DCV9	93	I	COEN	133	I	TST27
14	I	DCSY	54	I	IER9	94	I	TST17	134	I	TST28
15	I	TST11	55	I	IER8	95	I	TEST4	135	I	OSEL0
16	O	PPWM	56	I	IER7	96	I	TEST3	136	I	OSEL1
17	O	PLL2	57	I	IER6	97	I	TEST2	137	I	OSEL2
18	O	FSC	58	I	IER5	98	I	TEST1	138	I	MDDATA
19	O	CK2FSC	59	–	GND	99	I	TEST0	139	–	GND
20	–	V_{DD}	60	–	V_{DD}	100	–	V_{DD}	140	–	V_{DD}
21	O	CK4FSC	61	I	IER4	101	I	TMOD	141	I	DD SCK
22	I	TST14	62	I	IER3	102	I	OUTCNT	142	I	DDSTART
23	I	DRSY	63	I	IER2	103	I	OEN	143	I	ICADD3
24	I	DSSY	64	I	IER1	104	O	YCO9	144	I	ICADD2
25	I	DCF0	65	I	IER0	105	O	YCO8	145	I	ICADD1
26	I	DCF1	66	I	TST15	106	O	YCO7	146	I	ICADD0
27	I	DCF2	67	I	TST16	107	O	YCO6	147	O	STDATA
28	I	APARI	68	O	ADCK	108	O	YCO5	148	O	SFTP
29	I	ACV0	69	O	ERPWM	109	O	YCO4	149	O	XSITE
30	I	GND	70	–	GND	110	–	GND	150	–	GND
31	I	ACV1	71	O	ERW	111	O	YCO3	151	I	CK
32	I	ACV2	72	O	OER2	112	O	YCO2	152	I	OSEL3
33	I	ACV3	73	O	OER3	113	O	YCO1	153	O	GD7
34	I	ACV4	74	O	OER4	114	O	YCO0	154	O	GD6
35	I	ACV5	75	O	OER5	115	O	OHD	155	O	GD5
36	I	ACV6	76	O	OER6	116	O	OVD	156	O	GD4
37	I	ACV7	77	O	OER7	117	O	OCF	157	O	GD3
38	I	ACV8	78	O	OER8	118	O	OPARI	158	O	GD2
39	I	ACV9	79	O	OER9	119	O	OWCK	159	O	GD1
40	–	V_{DD}	80	–	V_{DD}	120	–	V_{DD}	160	–	V_{DD}

INPUT

ACV0 – ACV9	; ANALOG INPUT DATA (0 – 9)
AGH	; ANALOG GATED H
APARI	; PARITY OF ANALOG INPUT DATA
ASYNC	; ANALOG COMPOSITE SYNC
CK	; INPUT 8fsc CK
CL	; POWER ON RESET
COEN	; CHROMA OUTPUT ENABLE
DCF0 – DCF2	; D2 INPUT CF (0 – 2)
DCSY	; DELAYED COMPOSITE SYNC
DCV0 – DCV9	; DIGITAL INPUT DATA (0 – 9)
DDSCK	; CK FOR SERIAL MODE DATA
DDSTART	; START PULSE OF SERIAL COMMUNICATION
DPARI	; PARITY OF DIGITAL INPUT DATA
DRSY	; DIGITAL DELAYED SYNC (8fsc × 8N)
DSSY	; DIGITAL DELAYED SYNC (8fsc × 8N)
ICADD0–ICADD3	; IC ADDRESS (0 – 3)
IER0 – IER9	; NON STANDARD PLL ERROR INPUT (0 – 9)
MDDATA	; SERIAL MODE DATA FROM CPU
OEN	; Y (Y/C) OUTPUT ENABLE
OSEL0 – OSEL3	; TEST (0 – 3)
OUTCNT	; OUTPUT CONTROL : Y/YC MULTIPLEX
TEST0 – TEST4	; TEST (0 – 4)
TMOD	; TEST MODE
TST11	; TEST11
TST14 – TST28	; TEST (14 – 28)

OUTPUT

ADCK	; NON STANDARD PLL ERROR SAMPLING CK
ANA	; ANALOG/DIGITAL
CK2FSC	; INTERNAL 2fsc CK
CK4FSC	; INTERNAL 4fsc CK
CO0 – CO9	; CHROMA OUT (0 – 9)
CPWM	; CLAMP ERROR PWM
ERPWM	; NON STANDARD PLL ERROR SAMPLING PWM
ERW	; NON STANDARD PLL ERROR WIDTH
FSC	; INTERNAL fsc CK
GD0 – GD7	; GAIN DATA (0 – 7)
GH	; GATED H
MA	; MANUAL/AUTO (AGC MODE)
OCF	; CF INFORMATION
OER2 – OER9	; NON STANDARD PLL ERROR OUTPUT (2 – 9)
OHD	; HD
OPARI	; PARITY OF OUTPUT DATA
OVD	; VD
OWCK	; PSEUDO 13.5 MHz/27 MHz
PAL	; PAL/NTSC
PLL2	; DIGITAL PLL FOR 2fsc CK
PPWM	; SAMPLING CK PLL ERROR PWM
SASY	; ANALOG SYNC
SDSY	; DIGITAL SYNC
SFTP	; DIRECTION FOR SCH 0*
STDATA	; SERIAL OUTPUT DATA TO CPU
XSITE	; COMPONENT/COMPOSITE
YC00 – YC09	; Y (Y/C) OUTPUT (0 – 9)

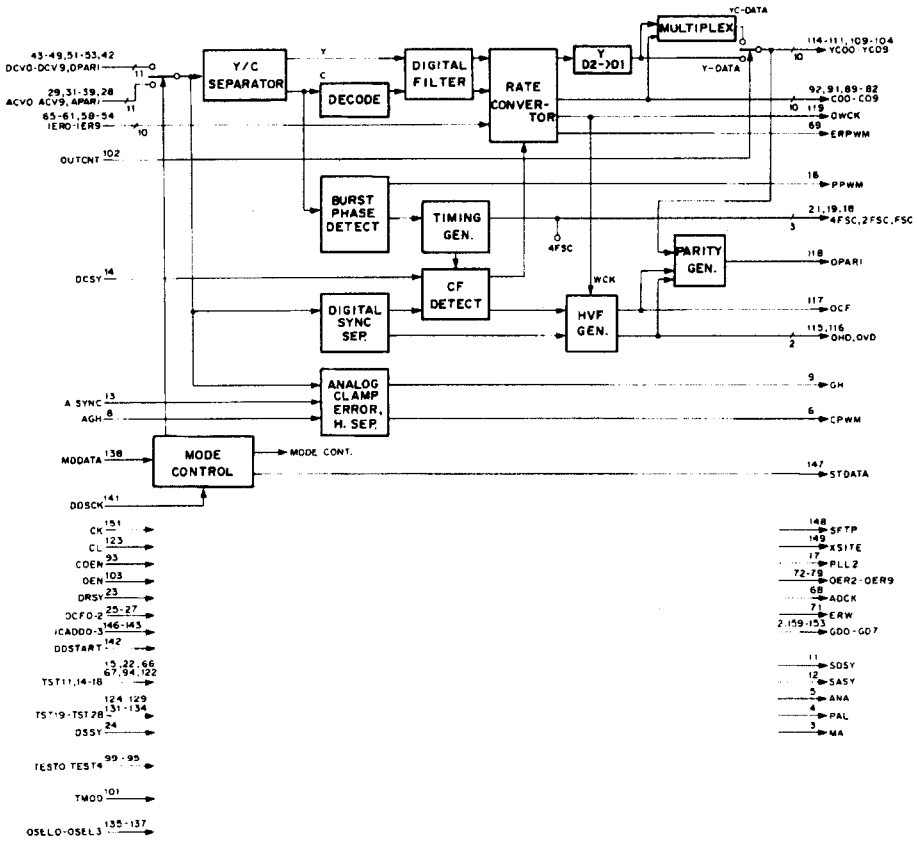

CXD8821Q (SONY)

C-MOS AUDIO TIMING GENERATOR
– TOP VIEW –

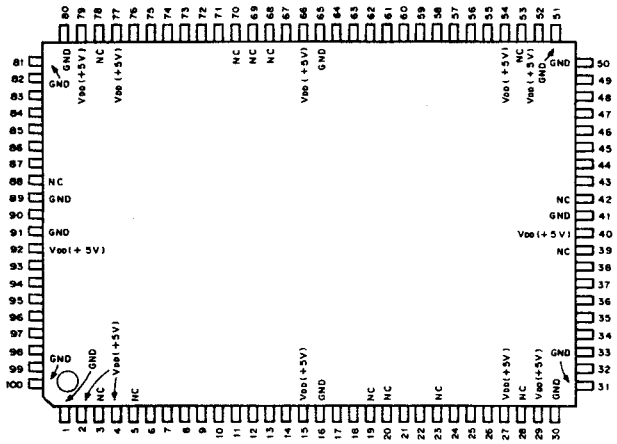

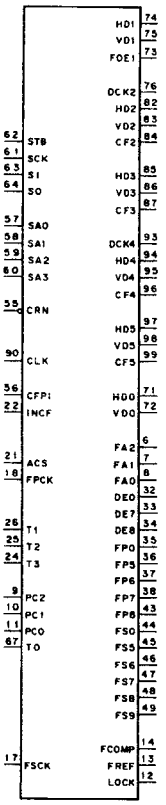

INPUT

ACS	; H : 48 kHz AUDIO L : 44.1 kHz AUDIO
CFPI	; INPUT CF PULSE
CLK	; CLOCK
CRN	; POWER ON RESET
FPCK	; AUDIO CLOCK (256FS) FOR PROGRAM PLAY
FSCK	; AUDIO CLOCK (512FS)
INCF	; CF SIGNAL FOR VD2 REFORMING
SA0 – 3	; SERIAL PRESET ADDRESS
SCK	; SERIAL CLOCK
SI	; SERIAL INPUT DATA
STB	; SERIAL START PULSE
T1 – T3	; TEST PIN FOR IC

OUTPUT

CF2	; CF INFORMATION PULSE OF THE # 2 GROUP (PROGRAMABLE)
CF3	; CF INFORMATION PULSE OF THE # 3 GROUP (PROGRAMABLE)
CF4	; CF INFORMATION PULSE OF THE # 4 GROUP (PROGRAMABLE)
CF5	; CF INFORMATION PULSE OF THE # 5 GROUP (PROGRAMABLE)
DCK2	; 13.5 MHz CLOCK OF THE # 2 GROUP (PROGRAMABLE)
DCK4	; 13.5 MHz CLOCK OF THE # 4 GROUP (PROGRAMABLE)
DE0 – 8	; AUDIO CLOCK FOR PITCH CONTROL
FA0 – 2	; AUDIO 5-FIELD SEQ. ID
FCOMP	; AUDIO CLOCK FOR PLL
FOE1	; ODD/EVEN SIGNAL OF THE # 1 GROUP (PROGRAMABLE)
FP0 – 8	; AUDIO CLOCK FOR PROGRAM PLAY
FREF	; REFERENCE CLOCK FOR AUDIO PLL
FS0 – 9	; AUDIO CLOCK (FS9 : 512FS)
HD0	; HD PULSE (UNPROGRAMABLE)
HD1	; HD PULSE OF THE # 1 GROUP (PROGRAMABLE)
HD2	; HD PULSE OF THE # 2 GROUP (PROGRAMABLE)
HD3	; HD PULSE OF THE # 3 GROUP (PROGRAMABLE)
HD4	; HD PULSE OF THE # 4 GROUP (PROGRAMABLE)
HD5	; HD PULSE OF THE # 5 GROUP (PROGRAMABLE)
LOCK	; AUDIO PLL LOCK DET
PC0 – 2	; TEST PIN FOR IC
SO	; SERIAL OUTPUT DATA
TO	; TEST PIN FOR IC
VD0	; VD PULSE (UNPROGRAMABLE)
VD1	; VD PULSE OF THE # 1 GROUP (PROGRAMABLE)
VD2	; VD PULSE OF THE # 2 GROUP (PROGRAMABLE)
VD3	; VD PULSE OF THE # 3 GROUP (PROGRAMABLE)
VD4	; VD PULSE OF THE # 4 GROUP (PROGRAMABLE)
VD5	; VD PULSE OF THE # 5 GROUP (PROGRAMABLE)

(V_{DD} = + 5 V)

PIN No.	I/O	SIGNAL	PIN No.	I/O	SIGANL	PIN No.	I/O	SIGNAL	PIN No.	I/O	SIGNAL
1	–	GND	26	I	T1	51	–	GND	76	O	DCK2
2	–	V_{DD}	27	–	V_{DD}	52	–	V_{DD}	77	–	V_{DD}
3	–	NC	28	–	NC	53	–	NC	78	–	NC
4	–	V_{DD}	29	–	V_{DD}	54	–	V_{DD}	79	–	V_{DD}
5	–	NC	30	–	GND	55	I	CRN	80	–	GND
6	O	FA2	31	–	GND	56	I	CFPI	81	–	GND
7	O	FA1	32	O	DE0	57	I	SA0	82	O	HD2
8	O	FA0	33	O	DE7	58	I	SA1	83	O	VD2
9	O	PC2	34	O	DE8	59	I	SA2	84	O	CF2
10	O	PC1	35	O	FP0	60	I	SA3	85	O	HD3
11	O	PC0	36	O	FP5	61	I	SCK	86	O	VD3
12	O	LOCK	37	O	FP6	62	I	STB	87	O	CF3
13	O	FREF	38	O	FP7	63	I	SI	88	–	NC
14	O	FCOMP	39	–	NC	64	O	SO	89	–	GND
15	–	V_{DD}	40	–	V_{DD}	65	–	GND	90	I	CLK
16	–	GND	41	–	GND	66	–	V_{DD}	91	–	GND
17	I	FSCK	42	–	NC	67	O	TO	92	–	V_{DD}
18	I	FPCK	43	O	FP8	68	–	NC	93	O	DCK4
19	–	NC	44	O	FS0	69	–	NC	94	O	HD4
20	–	NC	45	O	FS5	70	–	NC	95	O	VD4
21	I	ACS	46	O	FS6	71	O	HD0	96	O	CF4
22	I	INCF	47	O	FS7	72	O	VD0	97	O	HD5
23	–	NC	48	O	FS8	73	O	FOE1	98	O	VD5
24	I	T3	49	O	FS9	74	O	HD1	99	O	CF5
25	I	T2	50	–	GND	75	O	VD1	100	–	GND

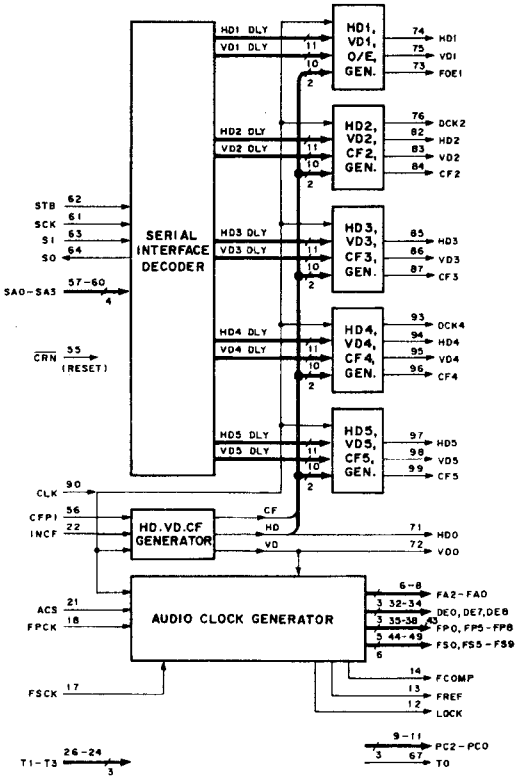

CXD8854Q (SONY)

C-MOS AUXILIARY CIRCUIT FOR BIT REDUCTION ENCODER AND ERROR CORRECTION CODER
– TOP VIEW –

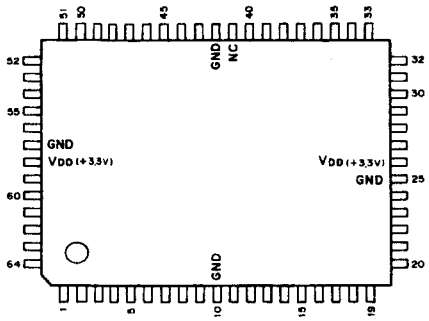

(VDD = + 3.3V)

PIN No.	I/O	SIGNAL	PIN No.	I/O	SIGNAL	PIN No.	I/O	SIGNAL	PIN No.	I/O	SIGNAL
1	I	IPAD0	17	I	IAD0	33	O	OAF0	49	I	IID5
2	I	IPAD1	18	I	IAD1	34	O	OAF1	50	I	IID6
3	I	IPAD2	19	I	IAFS	35	O	OAF2	51	I	IID7
4	I	IPAD3	20	I	IAV0	36	O	OCSX	52	I	IVA0
5	I	IPAD4	21	I	IAV1	37	O	OWE	53	I	IVA1
6	I	IPAD5	22	I	IA64	38	I	IWSEL	54	I	IWR
7	I	IPAD6	23	O	OH625	39	I	IWS0	55	I	IWE
8	I	IPAD7	24	I	IACK	40	I	IWS1	56	I	ICK16
9	I	IRST	25	–	GND	41	–	NC	57	–	GND
10	–	GND	26	–	VDD	42	–	GND	58	–	VDD
11	O	OACK	27	I	ID5F0	43	I	ITR	59	I	IIN
12	O	OAD0	28	I	ID5F1	44	I	IID0	60	O	OINX
13	O	OAD1	29	I	ID5F2	45	I	IID1	61	I	IPC5
14	O	OAFS	30	I	IR5F0	46	I	IID2	62	I	IPS0
15	O	OAV0	31	I	IR5F1	47	I	IID3	63	I	IPS1
16	O	OAV1	32	I	IR5F2	48	I	IID4	64	I	IPSTB

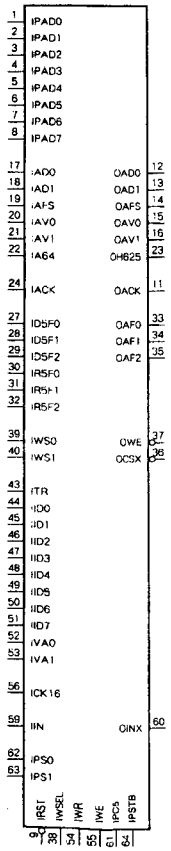

CXK1203AR (SONY) FLAT PACKAGE

C-MOS DIGITAL LINE MEMORY
– TOP VIEW –

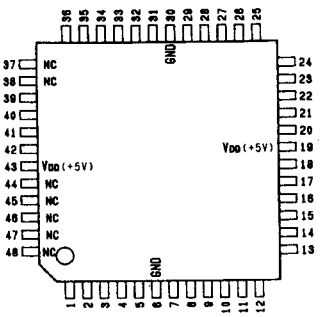

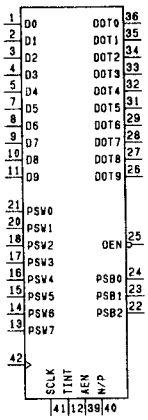

(VDD = + 5V)

PIN No.	I/O	SIGNAL	PIN No.	I/O	SIGANL	PIN No.	I/O	SIGNAL	PIN No.	I/O	SIGNAL
1	I	D0	13	I	PSW7	25	I	$\overline{OEN}$	37	–	N.C
2	I	D1	14	I	PSW6	26	O	DOT9	38	–	N.C
3	I	D2	15	I	PSW5	27	O	DOT8	39	I	AEN
4	I	D3	16	I	PSW4	28	O	DOT7	40	I	N/P
5	I	D4	17	I	PSW3	29	O	DOT6	41	I	SCLK
6	–	GND	18	I	PSW2	30	–	GND	42	I	CLK
7	I	D5	19	–	VDD	31	O	DOT5	43	–	VDD
8	I	D6	20	I	PSW1	32	O	DOT4	44	–	N.C
9	I	D7	21	I	PSW0	33	O	DOT3	45	–	N.C
10	I	D8	22	I	PSB2	34	O	DOT2	46	–	N.C
11	I	D9	23	I	PSB1	35	O	DOT1	47	–	N.C
12	I	TINT	24	I	PSB0	36	O	DOT0	48	–	N.C

AEN :LINE MEMORY SELECT
CLK :CLOCK
DIN0–DIN9 :VIDEO DATA INPUT
DOT0–DOT9 :VIDEO DATA OUTPUT
N/P :NTSC/PAL/SECAM SELECT
OEN :OUTPUT ENABLE
PSB0–PSB2 :DELAY STEP SELECT(1 BITxN)
PSW0–PSW7 :DELAY STEP SELECT(8 BITxN)
SCLK :CLOCK EDGE SELECT
TINT :TEST

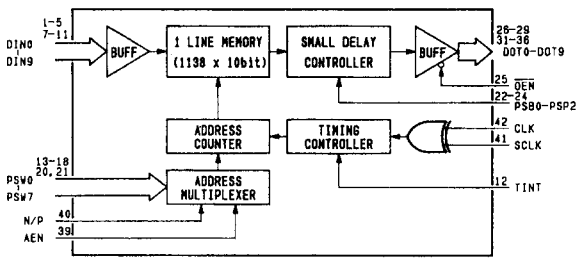

CXK58257AM-10L (SONY) FLAT PACKAGE

C-MOS 32768-WORD × 8-BIT STATIC RAM
– TOP VIEW –

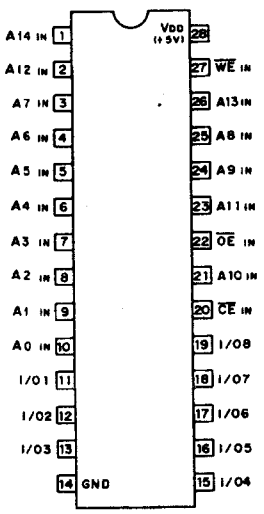

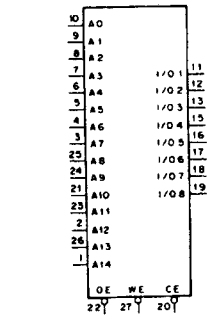

A0 – A14 ; ADDRESS INPUTS
CE ; CHIP ENABLE INPUT
I/O1 - I/O8 ; DATA INPUTS/OUTPUTS
OE ; OUTPUT ENABLE INPUT
WE ; WRITE ENABLE INPUT

CE	OE	WE	MODE	I/O TERMINAL
1	X	X	NOT SELECT	HIGH IMPEDANCE
0	1	1	OUTPUT DISABLE	HIGH IMPEDANCE
0	0	1	READ	OUTPUT DATA
0	X	0	WRITE	INPUT DATA

0 ; LOW LEVEL
1 ; HIGH LEVEL
X ; DON'T CARE

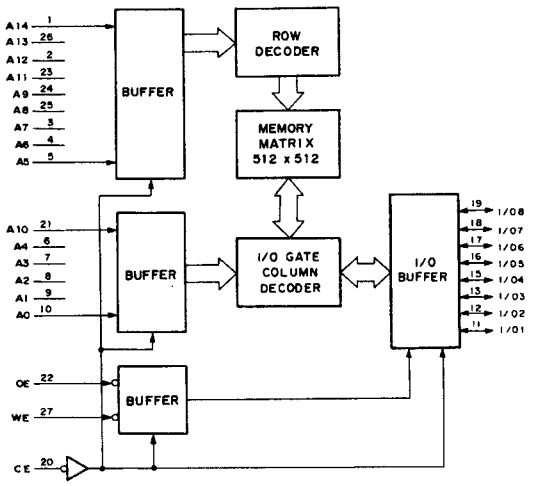

HD14053BFP (HITACHI) FLAT PACKAGE
TC4053BFS (TOSHIBA) FLAT PACKAGE

C-MOS TRIPLE 2-CHANNEL ANALOG MULTIPLEXERS/DEMULTIPLEXERS
– TOP VIEW –

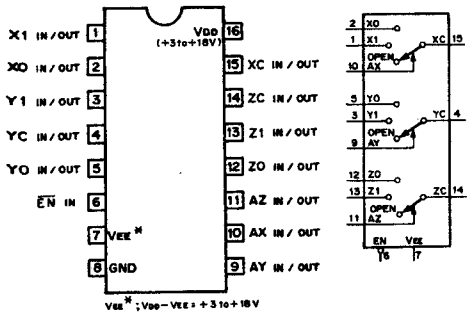

VEE* ; VDD – VEE = +3 to +18 V

CONT. INPUTS		ON
EN	A (X,Y,Z)	CHANNEL
0	0	0
0	1	1
1	X	OPEN

0 ; LOW LEVEL
1 ; HIGH LEVEL
X ; DON'T CARE.

HM53051FP-60 (HITACHI)

C-MOS 1M (262,144WORD × 4) -BIT FRAME MEMORY
– TOP VIEW –

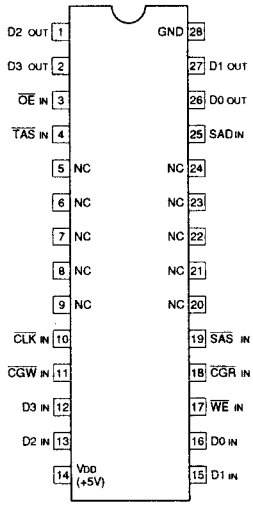

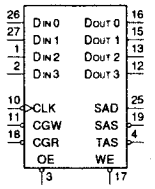

INPUT

$\overline{CGR}$	; READ CLOCK GATE
$\overline{CGW}$	; WRITE CLOCK GATE
$\overline{CLK}$	; SYSTEM CLOCK
D0-3 IN	; DATA INPUTS
$\overline{OE}$	; OUTPUT ENABLE
SAD	; SERIAL ADDRESS
$\overline{SAS}$	; SERIAL ADDRESS STROBE
$\overline{TAS}$	; TRANSFER ADDRESS STROBE
$\overline{WE}$	; WRITE ENABLE

OUTPUT

D0-3 OUT ; DATA OUTPUTS

The System mode is selected by LSB-bits OF SAD. ($\overline{MF}$, $\overline{WF}$, $\overline{RF}$, AWO, ARO)

$\overline{MF}$	$\overline{WF}$	$\overline{RF}$	AWO	ARO	MODE
0	0	0	X	X	READ/WRITE ADDRESS TRANSFER ASYNCHRONOUS
0	0	1	X	X	WRITE ADDRESS TRANSFER ASYNCHRONOUS
0	1	0	X	X	READ ADDRESS TRANSFER ASYNCHRONOUS
0	1	1	X	X	———
1	0	0	X	X	READ/WRITE ADDRESS TRANSFER SYNCHRONOUS
1	0	1	X	X	WRITE ADDRESS TRANSFER SYNCHRONOUS
1	1	0	X	X	READ ADDRESS TRANSFER SYNCHRONOUS
1	1	1	1	1	SYSTEM RESET
1	1	1	0	0	PROHIBITION
1	1	1	0	1	
1	1	1	1	0	

MF ; MODE FLAG
WF ; WRITE FLAG
RF ; READ FLAG
AW(0-12) ; WRITE ADDRESS
AR(0-12) ; READ ADDRESS
0 ; LOW LEVEL
1 ; HIGH LEVEL
X ; DON'T CARE

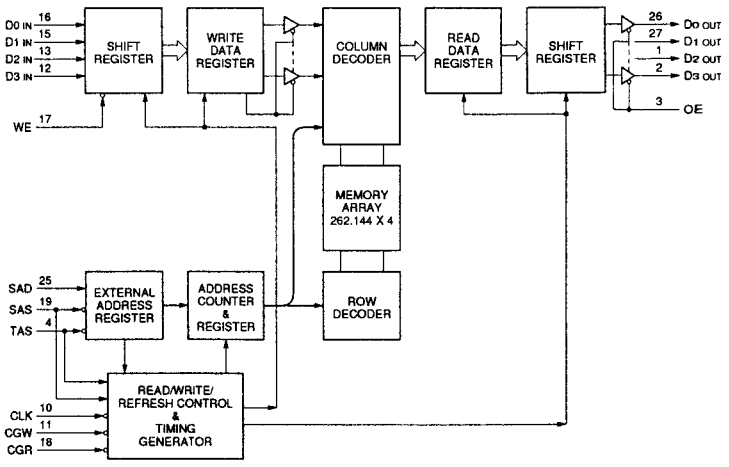

HM6264ALFP-12 (HITACHI) FLAT PACKAGE

C-MOS 64K (8192 × 8) -BIT STATIC RAM
– TOP VIEW –

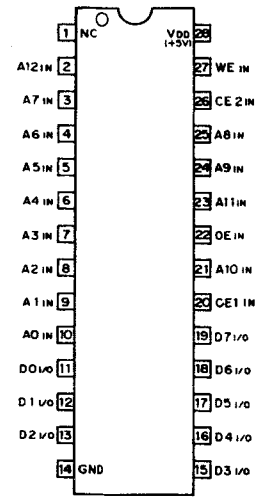

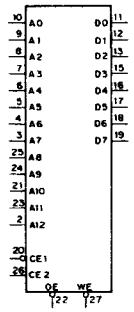

A0 – A12 ; ADDRESS INPUTS
CE1, CE2 ; CHIP ENABLE 1, 2 INPUTS
DO – D7 ; DATA INPUTS / OUTPUTS
OE ; OUTPUT ENABLE INPUT
WE ; WRITE ENABLE INPUT

MODE SELECTION

CONTROL INPUTS				MODE
CE1	CE2	OE	WE	
1	X	X	X	NO CHANGE
X	0	X	X	NO CHANGE
0	1	1	1	DISABLE OUTPUT
0	1	0	1	READ
0	1	X	0	WRITE

0 ; LOW LEVEL
1 ; HIGH LEVEL
X ; DON'T CARE

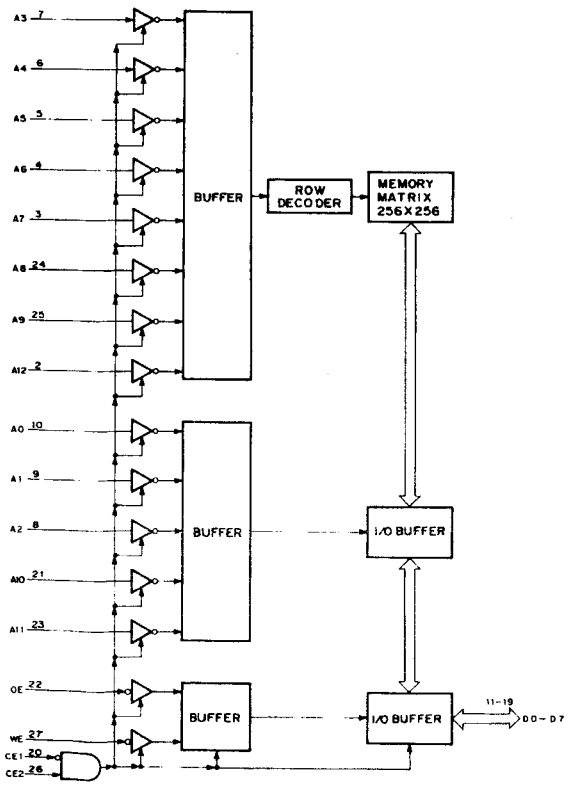

HM62W8127HJP-27 (HITACHI) PLCC
HM62W8127HJP-35 (HITACHI) PLCC

C-MOS 1M (131k × 8) -BIT STATIC RAM
– TOP VIEW –

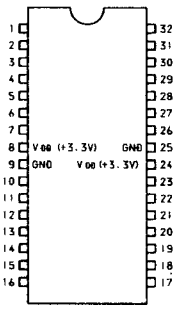

(VDD = +3.3V)

PIN No.	I/O	SIGNAL	PIN No.	I/O	SIGNAL
1	I	A3	17	I	A12
2	I	A2	18	I	A11
3	I	A1	19	I	A10
4	I	A0	20	I	A9
5	I	$\overline{CS}$	21	I	A8
6	I/O	I/O1	22	I/O	I/O5
7	I/O	I/O2	23	I/O	I/O6
8	-	VDD	24	-	VDD
9	-	GND	25	-	GND
10	I/O	I/O3	26	I/O	I/O7
11	I/O	I/O4	27	I/O	I/O8
12	I	$\overline{WE}$	28	I	$\overline{OE}$
13	I	A16	29	I	A7
14	I	A15	30	I	A6
15	I	A14	31	I	A5
16	I	A13	32	I	A4

INPUT
A0 – A16 : ADDRESS INPUTS
$\overline{CS}$: CHIP SELECT
$\overline{OE}$: OUTPUT ENABLE INPUT
$\overline{WE}$: WRITE ENABLE INPUT

INPUT/OUTPUT
I/O1 – I/O8 : DATA INPUTS/OUTPUTS

$\overline{CS}$	$\overline{OE}$	$\overline{WE}$	MODE	I/O
1	X	X	NON SELECT	HI-Z
0	1	1	OUTPUT DISABLE	HI-Z
0	0	1	READ	OUTPUT
0	X	0	WRITE	INPUT

0 : LOW LEVEL
1 : HIGH LEVEL
X : DON'T CARE
HI-Z : HIGH IMPEDANCE

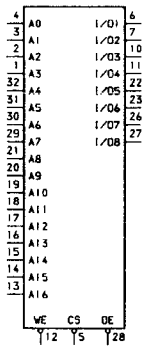

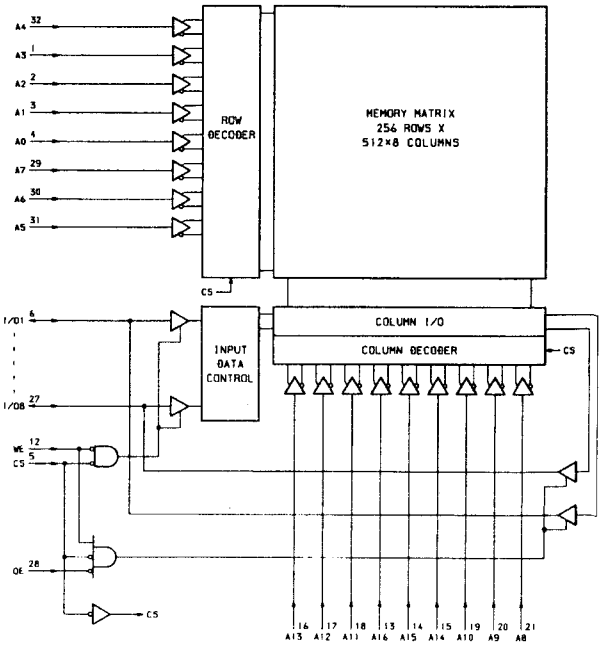

HD6415108RF10 (HITACHI)

C-MOS 16-BIT MICROCOMPUTER UNIT
– TOP VIEW –

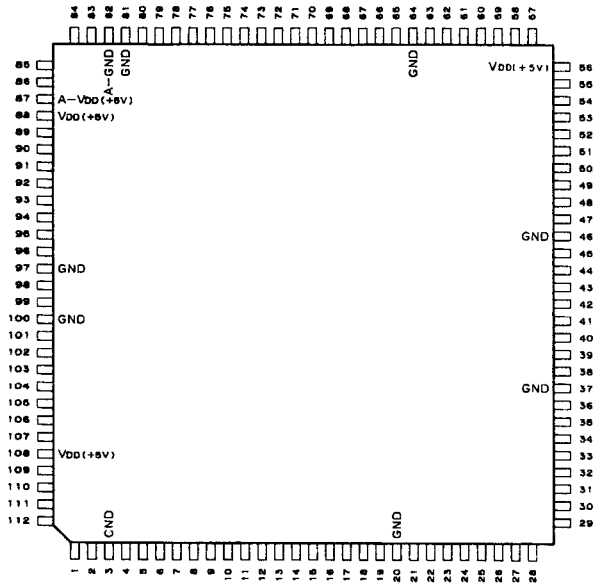

PIN No.	EXPANSION MINIMUM MODE				EXPANSION MAXIMUM MODE			
	MODE 1		MODE 2		MODE 3		MODE 4	
	I/O	SIGNAL	I/O	SIGNAL	I/O	SIGNAL	I/O	SIGNAL
1	I/O	$\overline{RES}$	I/O	$\overline{RES}$	I/O	$\overline{RES}$	I/O	$\overline{RES}$
2	I	NMI	I	NMI	I	NMI	I	NMI
3	–	GND	–	GND	–	GND	–	GND
4	I/O	P10	I/O	D0	I/O	P10	I/O	D0
5	I/O	P11	I/O	D1	I/O	P11	I/O	D1
6	I/O	P12	I/O	D2	I/O	P12	I/O	D2
7	I/O	P13	I/O	D3	I/O	P13	I/O	D3
8	I/O	P14	I/O	D4	I/O	P14	I/O	D4
9	I/O	P15	I/O	D5	I/O	P15	I/O	D5
10	I/O	P16	I/O	D6	I/O	P16	I/O	D6
11	I/O	P17	I/O	D7	I/O	P17	I/O	D7
12	I/O	D8	I/O	D8	I/O	D8	I/O	D8
13	I/O	D9	I/O	D9	I/O	D9	I/O	D9
14	I/O	D10	I/O	D10	I/O	D10	I/O	D10
15	I/O	D11	I/O	D11	I/O	D11	I/O	D11
16	I/O	D12	I/O	D12	I/O	D12	I/O	D12
17	I/O	D13	I/O	D13	I/O	D13	I/O	D13
18	I/O	D14	I/O	D14	I/O	D14	I/O	D14
19	I/O	D15	I/O	D15	I/O	D15	I/O	D15
20	–	GND	–	GND	–	GND	–	GND
21	O	A0	O	A0	O	A0	O	A0
22	O	A1	O	A1	O	A1	O	A1
23	O	A2	O	A2	O	A2	O	A2
24	O	A3	O	A3	O	A3	O	A3
25	O	A4	O	A4	O	A4	O	A4
26	O	A5	O	A5	O	A5	O	A5
27	O	A6	O	A6	O	A6	O	A6
28	O	A7	O	A7	O	A7	O	A7
29	O	A8	O	A8	O	A8	O	A8
30	O	A9	O	A9	O	A9	O	A9
31	O	A10	O	A10	O	A10	O	A10
32	O	A11	O	A11	O	A11	O	A11
33	O	A12	O	A12	O	A12	O	A12
34	O	A13	O	A13	O	A13	O	A13
35	O	A14	O	A14	O	A14	O	A14
36	O	A15	O	A15	O	A15	O	A15
37	–	GND	–	GND	–	GND	–	GND
38	I/O	P20	I/O	P20	O	A16	O	A16
39	I/O	P21	I/O	P21	O	A17	O	A17
40	I/O	P22	I/O	P22	O	A18	O	A18

PIN No.	EXPANSION MINIMUM MODE				EXPANSION MAXIMUM MODE			
	MODE 1		MODE 2		MODE 3		MODE 4	
	I/O	SIGNAL	I/O	SIGNAL	I/O	SIGNAL	I/O	SIGNAL
41	I/O	P23	I/O	P23	O	A19	O	A19
42	I/O	P24	I/O	P24	O	A20	O	A20
43	I/O	P25	I/O	P25	O	A21	O	A21
44	I/O	P26	I/O	P26	O	A22	O	A22
45	I/O	P27	I/O	P27	O	A23	O	A23
46	–	GND	–	GND	–	GND	–	GND
47	I/O	P30/$\overline{WAIT}$	I/O	P30/$\overline{WAIT}$	I/O	P30/$\overline{WAIT}$	I/O	P30/$\overline{WAIT}$
48	I/O	P31/$\overline{BACK}$	I/O	P31/$\overline{BACK}$	I/O	P31/$\overline{BACK}$	I/O	P31/$\overline{BACK}$
49	I/O	P32/$\overline{BREQ}$	I/O	P32/$\overline{BREQ}$	I/O	P32/$\overline{BREQ}$	I/O	P32/$\overline{BREQ}$
50	I/O	P33	I/O	P33	I/O	P33	I/O	P33
51	I/O	P34	I/O	P34	I/O	P34	I/O	P34
52	I/O	P35	I/O	P35	I/O	P35	I/O	P35
53	I/O	P36	I/O	P36	I/O	P36	I/O	P36
54	I/O	P37	I/O	P37	I/O	P37	I/O	P37
55	–	V_{DD}	–	V_{DD}	–	V_{DD}	–	V_{DD}
56	I/O	P40/ADTRG	I/O	P40/ADTRG	I/O	P40/ADTRG	I/O	P40/ADTRG
57	I/O	P41/TMCI	I/O	P41/TMCI	I/O	P41/TMCI	I/O	P41/TMCI
58	I/O	P42/TMRI	I/O	P42/TMRI	I/O	P42/TMRI	I/O	P42/TMRI
59	I/O	P43/TMO	I/O	P43/TMO	I/O	P43/TMO	I/O	P43/TMO
60	I/O	P44/FTI1	I/O	P44/FTI1	I/O	P44/FTI1	I/O	P44/FTI1
61	I/O	P45/FTCI1	I/O	P45/FTCI1	I/O	P45/FTCI1	I/O	P45/FTCI1
62	I/O	P46/FTI2	I/O	P46/FTI2	I/O	P46/FTI2	I/O	P46/FTI2
63	I/O	P47/FTCI2	I/O	P47/FTCI2	I/O	P47/FTCI2	I/O	P47/FTCI2
64	–	GND	–	GND	–	GND	–	GND
65	I/O	P50/FTOA1	I/O	P50/FTOA1	I/O	P50/FTOA1	I/O	P50/FTOA1
66	I/O	P51/FTOB1	I/O	P51/FTOB1	I/O	P51/FTOB1	I/O	P51/FTOB1
67	I/O	P52/FTOA2	I/O	P52/FTOA2	I/O	P52/FTOA2	I/O	P52/FTOA2
68	I/O	P53/FTOB2	I/O	P53/FTOB2	I/O	P53/FTOB2	I/O	P53/FTOB2
69	I/O	P54	I/O	P54	I/O	P54	I/O	P54
70	I/O	P55	I/O	P55	I/O	P55	I/O	P55
71	I/O	P56	I/O	P56	I/O	P56	I/O	P56
72	I/O	P57	I/O	P57	I/O	P57	I/O	P57
73	I/O	P60	I/O	P60	I/O	P60	I/O	P60
74	I/O	P61	I/O	P61	I/O	P61	I/O	P61
75	I/O	P62	I/O	P62	I/O	P62	I/O	P62
76	I/O	P63	I/O	P63	I/O	P63	I/O	P63
77	I/O	P64	I/O	P64	I/O	P64	I/O	P64
78	I/O	P65	I/O	P65	I/O	P65	I/O	P65
79	I/O	P66	I/O	P66	I/O	P66	I/O	P66
80	I/O	P67	I/O	P67	I/O	P67	I/O	P67

PIN No.	EXPANSION MINIMUM MODE				EXPANSION MAXIMUM MODE			
	MODE 1		MODE 2		MODE 3		MODE 4	
	I/O	SIGNAL	I/O	SIGNAL	I/O	SIGNAL	I/O	SIGNAL
81	–	GND	–	GND	–	GND	–	GND
82	–	A-GND	–	A-GND	–	A-GND	–	A-GND
83	I	P70/AN0	I	P70/AN0	I	P70/AN0	I	P70/AN0
84	I	P71/AN1	I	P71/AN1	I	P71/AN1	I	P71/AN1
85	I	P72/AN2	I	P72/AN2	I	P72/AN2	I	P72/AN2
86	I	P73/AN3	I	P73/AN3	I	P73/AN3	I	P73/AN3
87	–	A-V_{DD}	–	A-V_{DD}	–	A-V_{DD}	–	A-V_{DD}
88	–	V_{DD}	–	V_{DD}	–	V_{DD}	–	V_{DD}
89	I/O	P80/$\overline{IRQ0}$	I/O	P80/$\overline{IRQ0}$	I/O	P80/$\overline{IRQ0}$	I/O	P80/$\overline{IRQ0}$
90	I/O	P81/$\overline{IRQ1}$	I/O	P81/$\overline{IRQ1}$	I/O	P81/$\overline{IRQ1}$	I/O	P81/$\overline{IRQ1}$
91	I/O	P82/$\overline{IRQ2}$/SCK1	I/O	P82/$\overline{IRQ2}$/SCK1	I/O	P82/$\overline{IRQ2}$/SCK1	I/O	P82/$\overline{IRQ2}$/SCK1
92	I/O	P83/$\overline{IRQ3}$/SCK2	I/O	P83/$\overline{IRQ3}$/SCK2	I/O	P83/$\overline{IRQ3}$/SCK2	I/O	P83/$\overline{IRQ3}$/SCK2
93	I/O	P84/RXD1	I/O	P84/RXD1	I/O	P84/RXD1	I/O	P84/RXD1
94	I/O	P85/TXD1	I/O	P85/TXD1	I/O	P85/TXD1	I/O	P85/TXD1
95	I/O	P86/RXD2	I/O	P86/RXD2	I/O	P86/RXD2	I/O	P86/RXD2
96	I/O	P87/TXD2	I/O	P87/TXD2	I/O	P87/TXD2	I/O	P87/TXD2
97	–	GND	–	GND	–	GND	–	GND
98	I	EXTAL	I	EXTAL	I	EXTAL	I	EXTAL
99	I	XTAL	I	XTAL	I	XTAL	I	XTAL
100	–	GND	–	GND	–	GND	–	GND
101	O	ϕ	O	ϕ	O	ϕ	O	ϕ
102	O	E	O	E	O	E	O	E
103	O	$\overline{AS}$	O	$\overline{AS}$	O	$\overline{AS}$	O	$\overline{AS}$
104	O	$\overline{RD}$	O	$\overline{RD}$	O	$\overline{RD}$	O	$\overline{RD}$
105	O	$\overline{HWR}$	O	$\overline{HWR}$	O	$\overline{HWR}$	O	$\overline{HWR}$
106	O	$\overline{LWR}$	O	$\overline{LWR}$	O	$\overline{LWR}$	O	$\overline{LWR}$
107	O	$\overline{RFSH}$	O	$\overline{RFSH}$	O	$\overline{RFSH}$	O	$\overline{RFSH}$
108	–	V_{DD}	–	V_{DD}	–	V_{DD}	–	V_{DD}
109	I	MD0	I	MD0	I	MD0	I	MD0
110	I	MD1	I	MD1	I	MD1	I	MD1
111	I	MD2	I	MD2	I	MD2	I	MD2
112	I	$\overline{STBY}$	I	$\overline{STBY}$	I	$\overline{STBY}$	I	$\overline{STBY}$

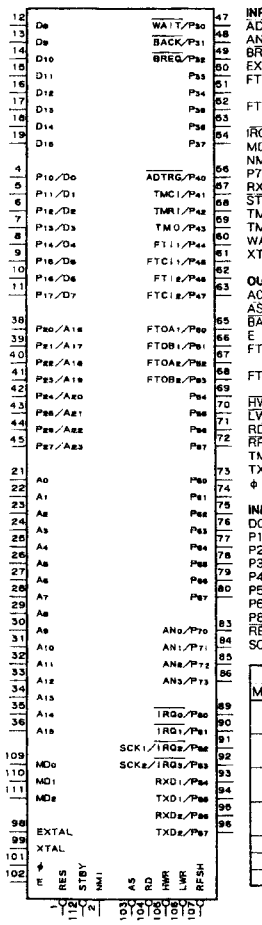

INPUT

ADTRG	: EXTERNAL TRIGGER
AN0 – AN3	: ANALOG
$\overline{BREQ}$	: BUS RIGHT REQUEST
EXTAL	: CRYSTAL OSCILLATOR
FTI1, FTI2	: FREE RUNNING TIMER INPUT CAPTURE (CH1, CH2)
FTCI1, FTCI2	: FREE RUNNING TIMER COUNTER CLOCK (CH1, CH2)
$\overline{IRQ0}$ – $\overline{IRQ3}$	: INTERRUPT REQUEST
MD0 – MD2	: MODE SET UP
NMI	: NON-MASKABLE INTERRUPT
P70 – P73	: PORT 7
RXD1, RXD2	: RECEIVE DATA (CH1, CH2)
$\overline{STBY}$	: STANDBY
TMCI	: 8-BIT TIMER CLOCK
TMRI	: 8-BIT TIMER COUNTER RESET
WAIT	: WAIT
XTAL	: CRYSTAL OSCILLATOR

OUTPUT

A0 – A23	: ADDRESS BUS
$\overline{AS}$	: ADDRESS STROBE
$\overline{BACK}$	: BUS RIGHT REQUEST ACKNOWLEDGE
E	: ENABLE CLOCK
FTOA1, FTOA2	: FREE RUNNING TIMER OUTPUT COMPARE A (CH1, CH2)
FTOB1, FTOB2	: FREE RUNNING TIMER OUTPUT COMPARE B (CH1, CH2)
$\overline{HWR}$	: HIGH WRITE
$\overline{LWR}$	: LOW WRITE
$\overline{RD}$	: READ
$\overline{RFSH}$	: REFRESH CYCLE
TMO	: 8-BIT TIMER
TXD1, TXD2	: TRANSMISSION DATA (CH1, CH2)
ϕ	: SYSTEM CLOCK

INPUT/OUTPUT

D0 – D15	: DATA BUS
P10 – P17	: PORT 1
P20 – P27	: PORT 2
P30 – P37	: PORT 3
P40 – P47	: PORT 4
P50 – P57	: PORT 5
P60 – P67	: PORT 6
P80 – P87	: PORT 8
$\overline{RES}$	: RESET
SCK1, SCK2	: SERIAL CLOCK (CH1, CH2)

INPUTS MD2	MD1	MD0	OPERATION MODE	CONTENTS
0	0	1	MODE 1	EXTENSION MINIMUM MODE (8BIT BUS)
0	1	0	MODE 2	EXTENSION MINIMUM MODE (16BIT BUS)
0	1	1	MODE 3	EXTENSION MAXIMUM MODE (8BIT BUS)
1	0	0	MODE 4	EXTENSION MAXIMUM MODE (16BIT BUS)
1	0	1	MODE 5	SINGLE CHIP MODE
1	1	0	MODE 6	
1	1	1	MODE 7	

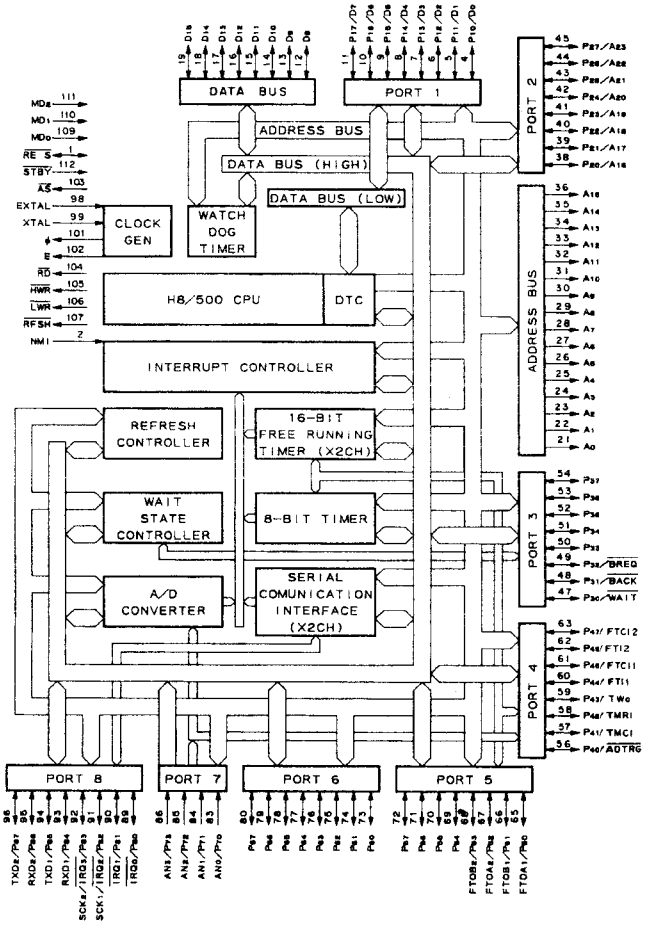

DS1000Z-100 (DALLAS SEMICONDUCTOR) FLAT PACKAGE

C-MOS DELAY LINE

- TOP VIEW -

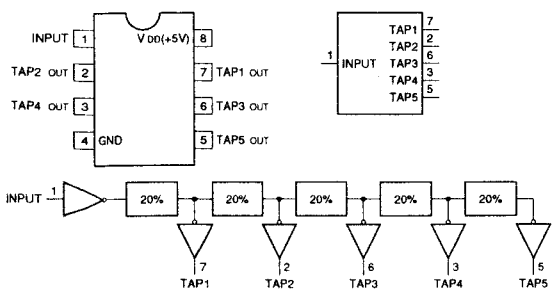

TYPE. NO.	DELAY TIME (ns) TAP1	TAP2	TAP3	TAP4	TAP5
DS1000M-50	10	20	30	40	50
DS1000M-60	12	24	36	48	60
DS1000M-75	15	30	45	60	75
DS1000M-100	20	40	60	80	100
DS1000M-125	25	50	75	100	125
DS1000M-150	30	60	90	120	150
DS1000M-175	35	70	105	140	175
DS1000M-200	40	80	120	160	200
DS1000M-250	50	100	150	200	250
DS1000M-500	100	200	300	400	500
DS1000Z-100	20	40	60	80	100

HM62W9127HJP-35 (HITACHI) PLCC

C-MOS 1M (128k × 9) -BIT STATIC RAM
– TOP VIEW –

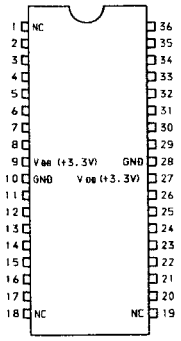

(VDD=+3.3V)

PIN No.	I/O	SIGNAL	PIN No.	I/O	SIGNAL
1	-	NC	19	-	NC
2	I	A3	20	I	A12
3	I	A2	21	I	A11
4	I	A1	22	I	A10
5	I	A0	23	I	A9
6	I	$\overline{CS}$	24	I	A8
7	I/O	I/O1	25	I/O	I/O5
8	I/O	I/O2	26	I/O	I/O6
9	-	VDD	27	-	VDD
10	-	GND	28	-	GND
11	I/O	I/O3	29	I/O	I/O7
12	I/O	I/O4	30	I/O	I/O8
13	I	$\overline{WE}$	31	I/O	I/O9
14	I	A16	32	I	$\overline{OE}$
15	I	A15	33	I	A7
16	I	A14	34	I	A6
17	I	A13	35	I	A5
18	-	NC	36	I	A4

INPUT

A0-A16 :ADDRESS INPUTS
$\overline{CS}$:CHIP SELECT
$\overline{OE}$:OUTPUT ENABLE INPUT
$\overline{WE}$:WRITE ENABLE INPUT

INPUT/OUTPUT

I/O1-I/O9 :DATA INPUTS/OUTPUTS

$\overline{CS}$	$\overline{OE}$	$\overline{WE}$	MODE	I/O
1	X	X	NON SELECT	HI-Z
0	1	1	OUTPUT DISABLE	HI-Z
0	0	1	READ	OUTPUT
0	X	0	WRITE	INPUT

0 :LOW LEVEL
1 :HIGH LEVEL
X :DON'T CARE
HI-Z :HIGH IMPEDANCE

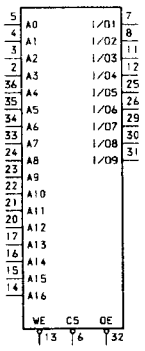

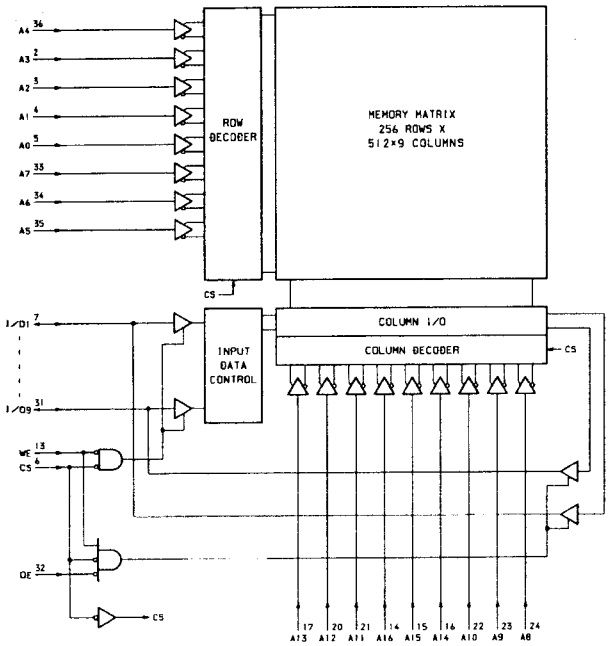

IDT6116SA25SO (IDT) FLAT PACKAGE
SRM2016M10 (SEIKO EPSON) FLAT PACKAGE

C-MOS 16K (2048 × 8) -BIT STATIC RAM
– TOP VIEW –

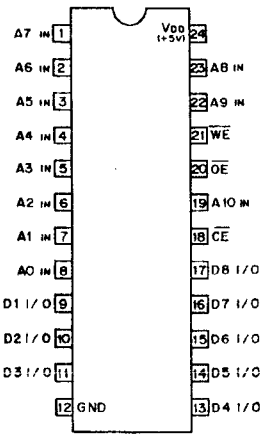

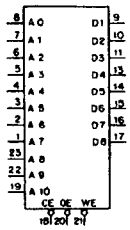

A0 - A10 : ADDRESS INPUTS
CE : CHIP ENABLE INPUT
D1 – D8 : DATA INPUTS/OUTPUTS
OE : OUTPUT ENABLE INPUT
WE : WRITE ENABLE INPUT

FUNCTION TABLE

CONTROL INPUTS			MODE	D1 – D8
CE	OE	WE		
1	X	X	STANDBY	HI-Z
0	1	1	DISABLE OUTPUT	HI-Z
0	0	1	FEAD	OUTPUT
0	X	0	WRITE	INPUT

0 : LOW LEVEL
1 : HIGH LEVEL
X : DON'T CARE
HI-Z : HIGH IMPEDANCE

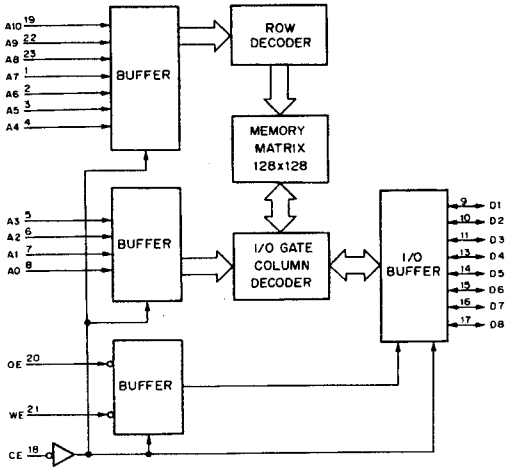

LA7205M (SANYO)

AGC AMP, INPUT SELECT, AGC DET, COMPARATOR
– TOP VIEW –

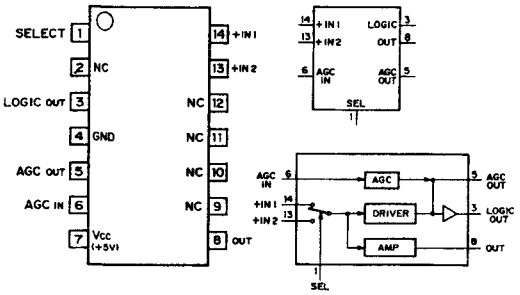

LM1881M (NS) FLAT PACKAGE

VIDEO SYNC SEPARATOR
– TOP VIEW –

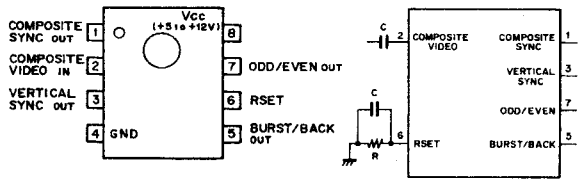

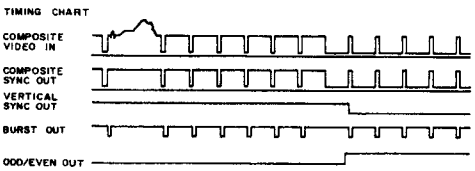

LM2903PS (TI) FLAT PACKAGE
NJM2903M (JRC) FLAT PACKAGE

DUAL VOLTAGE COMPARATORS
– TOP VIEW –

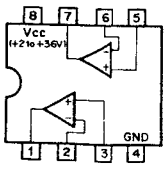

LM324NS (TI) FLAT PACKAGE

QUAD OPERATIOAL AMPLIFIERS
– TOP VIEW –

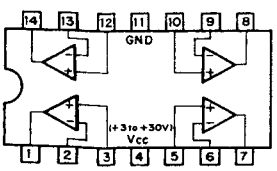

LM358D (TI) FLAT PACKAGE

DUAL OPERATIONAL AMPLIFIER
– TOP VIEW –

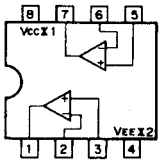

	Vcc*1	VEE*2
SINGLE SUPPLY	+3 to +32V	GND
SPLIT SUPPLIES	+1.5 to +16V	– 1.5 to – 16V

LM358PS (TI) FLAT PACKAGE

DUAL OPERATIONAL AMPLIFIERS
– TOP VIEW –

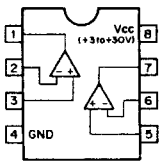

LT1180ACS (LINEAR) FLAT PACKAGE

RS232 DUAL DRIVER/RECEIVER
– TOP VIEW –

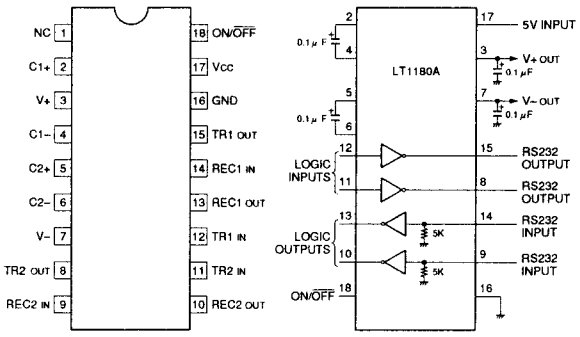

INPUT

C1+,C1–,C2+,C2–	; COMMUTATING CAPACITOR
TR1, TR2 IN	; RS232 DRIVER SIGNAL
ON/$\overline{OFF}$	; TTL/CMOS COMPATIBLE OPERATING MODE CONTROL
REC1, REC2 IN	; RECEIVER

OUTPUT

V+	; POSITIVE SUPPLY (RS-232 DRIVERS)
V–	; NEGATIVE SUPPLY (RS-232 DRIVERS)
TR1, TR2 OUT	; RS232 DRIVER SIGNAL (RS232 LEVELS)
REC1, REC2 OUT	; RECEIVER (TTL/CMOS VOLTAGE LEVELS)

LT1227CS8 (LINEAR TECH) FLAT PACKAGE

HIGH SPEED OPERATIONAL AMPLIFIER
– TOP VIEW –

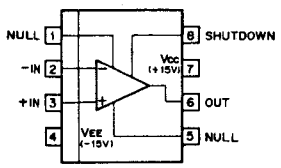

LTC1337CS (LINEAR) FLAT PACKAGE

CMOS RS232 TRANSCEIVER
– TOP VIEW –

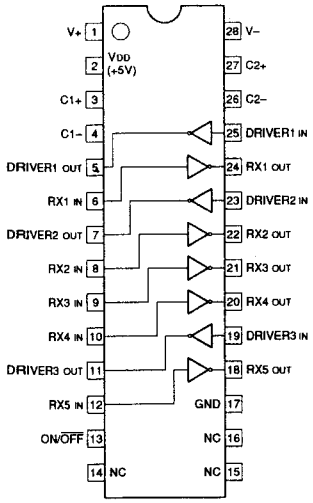

INPUT
DRIVER1~3 IN ; RS-232 DRIVER INPUTS
RX1~5 IN ; RECEIVER INPUTS

OUTPUT
DRIVER1~3 OUT ; RS-232 DRIVER OUTPUTS
RX1~5 OUT ; RECEIVER OUTPUTS TTL/CMOS VOLTAGE LEVELS

C1+,C1-,C2+,C2- ; EXTERNAL CAPACITORS
V+ ; POSITIVE SUPPLY (RS-232 DRIVERS)
V- ; NEGATIVE SUPPLY (RS-232 DRIVERS)

LTC491CS (LINEAR) FLAT PACKAGE

C-MOS DIFFERENTIAL DRIVER AND RECEIVER
– TOP VIEW –

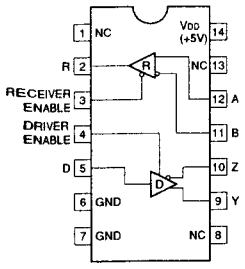

M27C4002-10F1 (SGS)

C-MOS 4M (256k x 16) -BIT UV EPROM
– TOP VIEW –

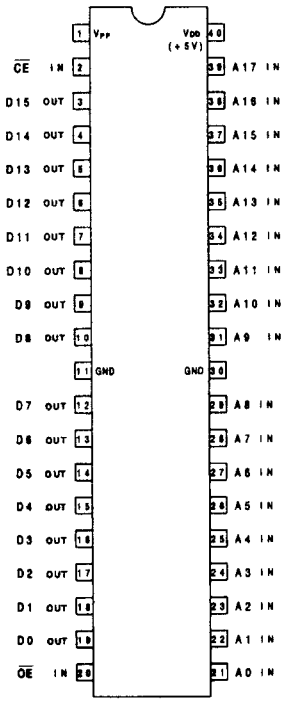

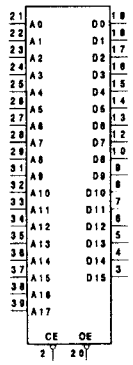

A0-A17 ;ADDRESS INPUTS
CE ;CHIP ENABLE
D0-D15 ;DATA OUTPUTS
OE ;OUTPUT ENABLE
VPP ;PROGRAMMING VOLTAGE (PROGRAM : +12.75V)

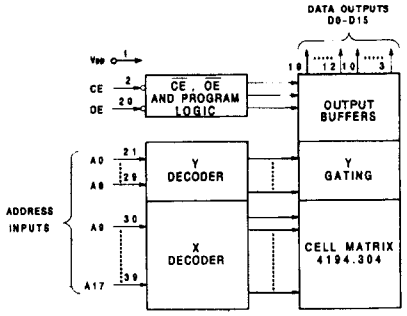

ABOVE DIAGRAM SHOWS CONDITIONS BEFORE PROGRAMMING.

CE	OE	A9	VPP	OUTPUT	FUNCTION
0	0	×	×	DOUT	READ
0	1	×	×	HI-Z	OUTPUT DISABLE
0	1	×	VPP	DIN	PROGRAM
1	0	×	VPP	DOUT	VERIFY
1	1	×	VPP	HI-Z	PROGRAM INHIBIT
1	×	×	×	HI-Z	STANDBY
0	0	VH	VDD	CODE	ELECTRONIC SIGNATURE

1 ; HIGH LEVEL
0 ; LOW LEVEL
× ; DON'T CARE
HI-Z ; HIGH IMPEDANCE
VH ; 12.0 ± 0.5 V

M62352GP (MITSUBISHI) FLAT PACKAGE

C-MOS 8-BIT x 12 CHANNEL D/A CONVERTER (WITH BUFFER OPERATIONAL AMPLIFIER)
– TOP VIEW –

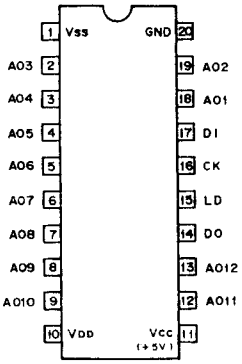

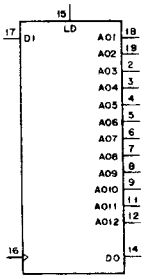

AO1 – AO12 ; 8-BIT D/A OUTPUT
CK ; CLOCK INPUT
DI ; SERIAL DATA INPUT
DO ; DATA OUTPUT

NOTE :
3.5V < VDD < Vcc
– 3.5V < Vss < Vcc

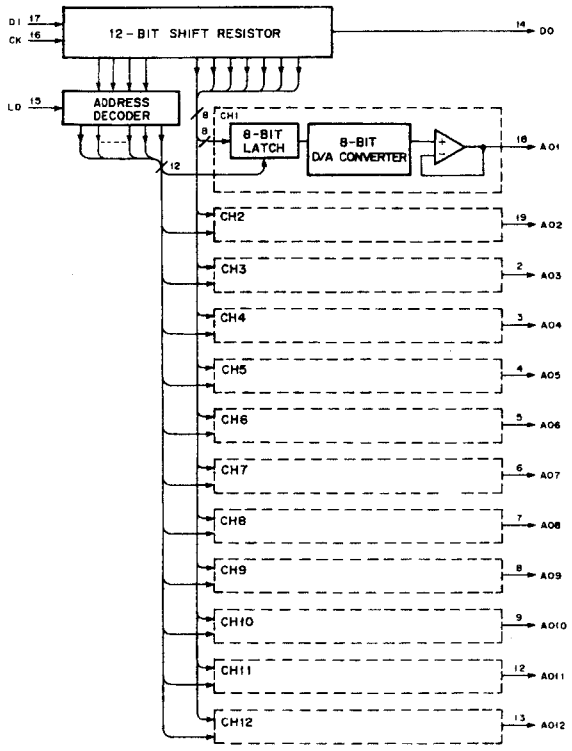

MB3761PF (FUJITSU) FLAT PACKAGE

VOLTAGE DETECTOR
– TOP VIEW –

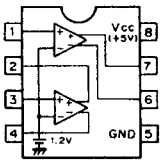

MB88306PF (FUJITSU) FLAT PACKAGE

C-MOS OUTPUT EXPANDER
– TOP VIEW –

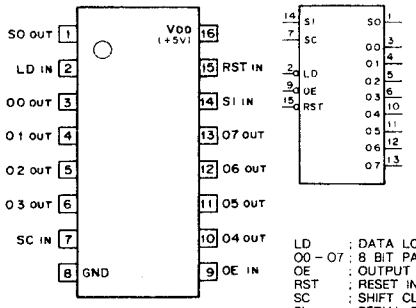

LD ; DATA LOAD INPUT
O0 – O7 ; 8 BIT PARALLEL OUTPUT PROT
OE ; OUTPUT ENABLE INPUT
RST ; RESET INPUT
SC ; SHIFT CLOCK INPUT
SI ; SERIAL DATA INPUT
SO ; SERIAL DATA OUTPUT

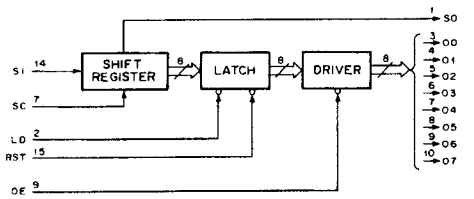

MC14051BF (MOTOROLA) FLAT PACKAGE

C-MOS 8-CHANNEL ANALOG MULTIPLEXER/DEMULTIPLEXER
– TOP VIEW –

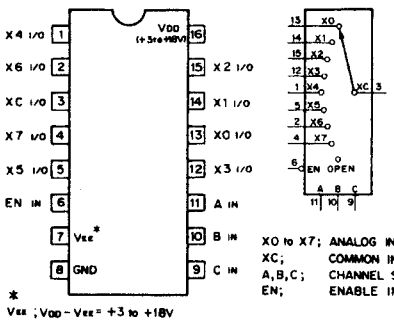

* VEE ; VDD – VEE = +3 to +18V

CONTROL INPUTS				SELECTED CHANNEL
EN	SELECT C	B	A	
0	0	0	0	X0
0	0	0	1	X1
0	0	1	0	X2
0	0	1	1	X3
0	1	0	0	X4
0	1	0	1	X5
0	1	1	0	X6
0	1	1	1	X7
1	X	X	X	OPEN

0; LOW LEVEL
1; HIGH LEVEL
X; DON'T CARE

XO to X7; ANALOG INPUTS/OUTPUTS
XC; COMMON INPUT/OUTPUT
A,B,C; CHANNEL SELECT INPUT
EN; ENABLE INPUT

MB88323A-PF-K2 (FUJITSU) FLAT PACKAGE

C-MOS TV DISPLAY CONTROLLER
– TOP VIEW –

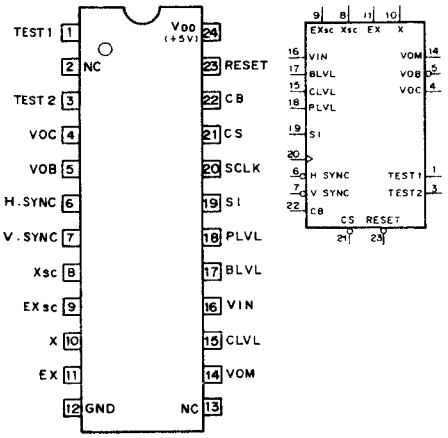

BLVL ; BORDER OR BACKGROUND ANALOG LEVEL INPUT
CB ; COLOR BURST DETECTION INPUT
CLVL ; CHARACTER ANALOG LEVEL INPUT
CS ; CHIP SELECT INPUT
EX ; DOT CLOCK INPUT
EXsc ; COLOR BURST CLOCK INPUT
H.SYNC ; H SYNC INPUT
PLVL ; VIDEO LEVEL CONTROL INPUT
SI ; SERIAL DATA INPUT
TEST1 ; CHIP TEST OUTPUT
TEST2 ; (NORMALLY SET TO OPEN)
VIN ; VIDEO SIGNAL INPUT
VOB ; BORDER OR BACKGROUND SIGNAL OUTPUT
VOC ; CHARACTER SIGNAL OUTPUT
VOM ; VIDEO/CHARACTER/BORDER OR BACKGROUND MIX OUTPUT
V.SYNC ; V SYNC INPUT
X ; DOT CLOCK OUTPUT
Xsc ; COLOR BURST CLOCK OUTPUT

MC14052BF (MOTOROLA) FLAT PACKAGE

C-MOS DUAL 4-CHANNEL ANALOG MULTIPLEXERS/DEMULTIPLEXERS
– TOP VIEW –

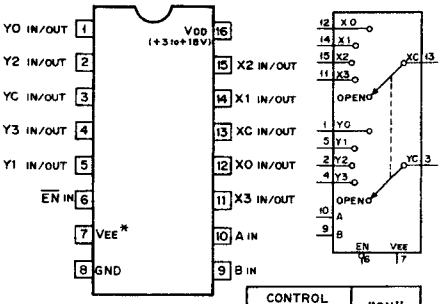

VEE* ; VDD – VEE = +3 to +18V

CONTROL INPUTS			"ON" CHANNEL
EN	B	A	
0	0	0	0
0	0	1	1
0	1	0	2
0	1	1	3
1	X	X	OPEN

0; LOW LEVEL
1; HIGH LEVEL
X; DON'T CARE.

MC1496M (MOTOROLA) FLAT PACKAGE

BALANCED MODULATOR/DEMODULATOR
– TOP VIEW –

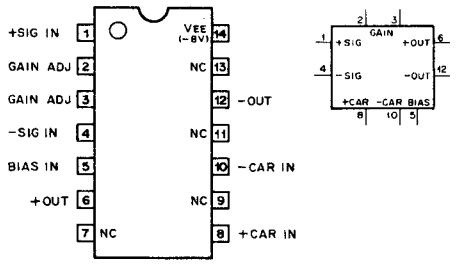

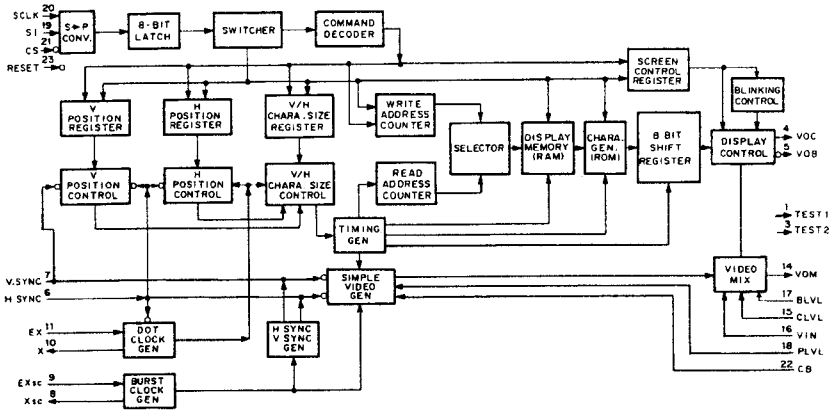

MC14577CF (MOTOROLA) FLAT PACKAGE

C-MOS DUAL VIDEO AMPLIFIERS
– TOP VIEW –

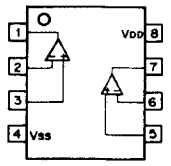

※VDD + | Vss | = + 5V to + 12V

MC34184M (MOTOROLA) FLAT PACKAGE

JFET INPUT OPERATIONAL AMPLIFIER
– TOP VIEW –

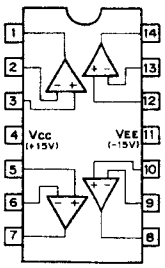

MC74HC112F (MOTOROLA) FLAT PACKAGE

C-MOS J-K FLIP-FLOP WITH DIRECT SET/RESET
– TOP VIEW –

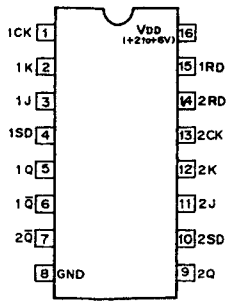

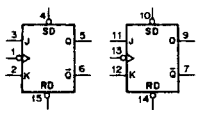

INPUT					OUTPUT	
SD	RD	CK	J	K	Qn+1	Q̄n+1
0	1	X	X	X	1	0
1	0	X	X	X	0	1
0	0	X	X	X	1*	1*
1	1	↓	0	0	Qn	Q̄n
			0	1	0	1
			1	0	1	0
			1	1	Q̄n	Qn
1	1	1	X	X	Qn	Q̄n

0 ; LOW LEVEL X ; DON'T CARE
1 ; HIGH LEVEL * ; NONSTABLE

NJM062M (JRC) FLAT PACKAGE
TL062CPW (TI) FLAT PACKAGE

OPERATIONAL AMPLIFIER\ (J FET INPUT)
– TOP VIEW –

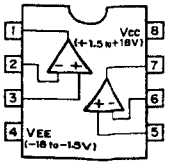

MSM6660-01GS-V1K (OKI)

C-MOS LCD DRIVER
– TOP VIEW –

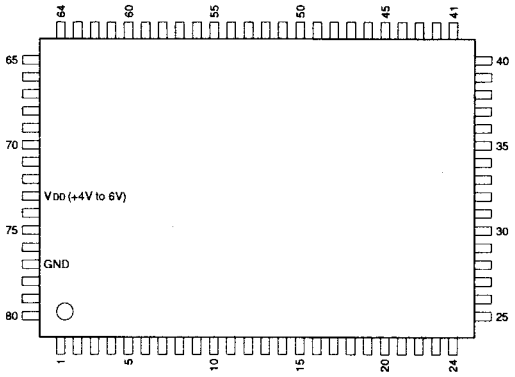

NOTE ; VDD ≧ VLC1 ≧ VLC2 ≧ VLC3 ≧ GND

PIN No.	I/O	SIGNAL	PIN No.	I/O	SIGNAL	PIN No.	I/O	SIGNAL	PIN No.	I/O	SIGNAL
1	O	SEG0	21	O	SEG20	41	O	SEG40	61	O	SEG60
2	O	SEG1	22	O	SEG21	42	O	SEG41	62	O	SEG61
3	O	SEG2	23	O	SEG22	43	O	SEG42	63	O	COM OUT
4	O	SEG3	24	O	SEG23	44	O	SEG43	64	I/O	SYNC
5	O	SEG4	25	O	SEG24	45	O	SEG44	65	I	CE
6	O	SEG5	26	O	SEG25	46	O	SEG45	66	I	DATA
7	O	SEG6	27	O	SEG26	47	O	SEG46	67	I	CK
8	O	SEG7	28	O	SEG27	48	O	SEG47	68	I/O	OSC
9	O	SEG8	29	O	SEG28	49	O	SEG48	69	I	SEL
10	O	SEG9	30	O	SEG29	50	O	SEG49	70	I	2/3
11	O	SEG10	31	O	SEG30	51	O	SEG50	71	I	LT
12	O	SEG11	32	O	SEG31	52	O	SEG51	72	I	BL
13	O	SEG12	33	O	SEG32	53	O	SEG52	73	–	VDD
14	O	SEG13	34	O	SEG33	54	O	SEG53	74	I	VLC1
15	O	SEG14	35	O	SEG34	55	O	SEG54	75	I	VLC2
16	O	SEG15	36	O	SEG35	56	O	SEG55	76	I	VLC3
17	O	SEG16	37	O	SEG36	57	O	SEG56	77	–	GND
18	O	SEG17	38	O	SEG37	58	O	SEG57	78	O	COM1
19	O	SEG18	39	O	SEG38	59	O	SEG58	79	O	COM2
20	O	SEG19	40	O	SEG39	60	O	SEG59	80	O	COM3

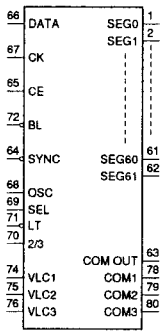

INPUT
2/3 ; 1/2 DUTY/ 1/3 DUTY SELECT
BL ; LCD INDICATION CONTROL ("L" ALL SEGMENTS OFF)
CE ; CHIP SELECT
CK ; SHIFT CLOCK FOR SERIAL DATA
DATA ; DATA
LT ; LCD INDICATION CONTROL ("L" ALL SEGMENTS ON)
SEL ; CONTROL/CONTROLED SELECT
VLC1-3 ; LCD BIAS VOLTAGE

OUTPUT
COM OUT ; SYNC CLOCK FOR LCD
COM1-3 ; COMMON SIGNAL FOR LCD DRIVE
SEG0-61 ; SEGMENT SIGNAL FOR LCD

INPUT/OUTPUT
OSC ; OSC
SYNC ; SYNC SIGNAL

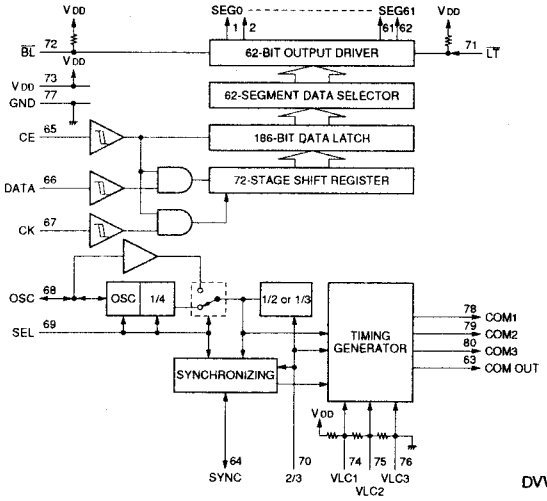

MC68340FE16B (MOTOROLA)
MC68340FE16C (MOTOROLA)

32-BIT MICROPROCESSOR
– TOP VIEW –

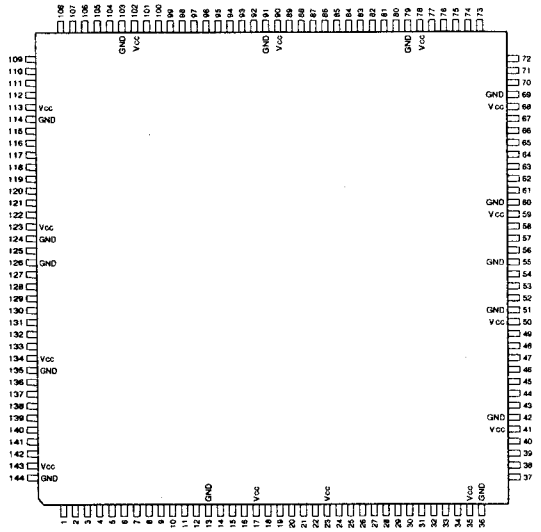

PIN No.	I/O	SIGNAL	SIGNAL NAME	PIN No.	I/O	SIGNAL	SIGNAL NAME	PIN No.	I/O	SIGNAL	SIGNAL NAME	PIN No.	I/O	SIGNAL	SIGNAL NAME
1	O	$\overline{RMC}$	READ-MODIFY-WRITE CYCLE	41	–	Vcc		81	I	$\overline{CTSA}$	CLEAR-TO-SEND	121	I/O	D10	DATA BUS
2	O	R/$\overline{W}$	READ/WRITE	42	–	GND		82	O	$\overline{RxRDYA}$	RECEIVER READY/FIFO FULL/OP4	122	I/O	D11	DATA BUS
3	O	SIZ1	SIZE	43	O	A23	ADDRESS BUS	83	O	$\overline{TxRDYA}$	TRANSMITTER READY/OP5	123	–	Vcc	
4	O	SIZ0	SIZE	44	O	A22	ADDRESS BUS	84	I	RxDB	RECEIVE DATA	124	–	GND	
5	O	$\overline{DS}$	DATA STROBE	45	O	A21	ADDRESS BUS	85	O	TxDB	TRANSMIT DATA	125	I/O	D12	DATA BUS
6	O	$\overline{AS}$	ADDRESS STROBE	46	O	A20	ADDRESS BUS	86	O	$\overline{RTSB}$	REQUEST-TO-SEND/OP1,OP0	126	–	GND	
7	I	$\overline{BGACK}$	BUS GRANT ACKNOWLEDGE	47	O	A19	ADDRESS BUS	87	I	$\overline{CTSB}$	CLEAR-TO-SEND	127	I/O	D13	DATA BUS
8	O	$\overline{BG}$	BAS GRANT	48	O	A18	ADDRESS BUS	88	I	SCLK	SERIAL CLOCK	128	I/O	D14	DATA BUS
9	I	$\overline{BR}$	BUS REQUEST	49	O	A17	ADDRESS BUS	89	O	X2	SERIAL CRYSTAL OSCILLATOR	129	I/O	D15	DATA BUS
10	I	$\overline{BERR}$	BUS ERROR	50	–	Vcc		90	–	Vcc		130	I/O	A24	ADDRESS BUS/PORT A0 INTERRUPT ACKNOWLEDGE
11	I/O	$\overline{HALT}$	HALT	51	–	GND		91	–	GND		131	I/O	A25	ADDRESS BUS/PORT A1 INTERRUPT ACKNOWLEDGE
12	I/O	$\overline{RESET}$	RESET	52	O	A16	ADDRESS BUS	92	I	X1	SERIAL CRYSTAL OSCILLATOR	132	I/O	A26	ADDRESS BUS/PORT A2 INTERRUPT ACKNOWLEDGE
13	–	GND		53	O	A15	ADDRESS BUS	93	I	$\overline{DREQ1}$	DMA REQUEST	133	I/O	A27	ADDRESS BUS/PORT A3 INTERRUPT ACKNOWLEDGE
14	O	CLKOUT	SYSTEM CLOCK	54	O	A14	ADDRESS BUS	94	O	$\overline{DACK1}$	DMA ACKNOWLEDGE	134	–	Vcc	
15	–	Vcc		55	–	GND		95	I/O	$\overline{DONE1}$	DMA DONE	135	–	GND	
16	I	XFC	EXTERNAL FILTER CAPACITOR	56	O	A13	ADDRESS BUS	96	I	$\overline{DREQ2}$	DMA REQUEST	136	I/O	A28	ADDRESS BUS/PORT A4 INTERRUPT ACKNOWLEDGE
17	–	Vcc		57	O	A12	ADDRESS BUS	97	O	$\overline{DACK2}$	DMA ACKNOWLEDGE	137	I/O	A29	ADDRESS BUS/PORT A5 INTERRUPT ACKNOWLEDGE
18	I	EXTAL	CRYSTAL OSCILLATOR	58	O	A11	ADDRESS BUS	98	I/O	$\overline{DONE2}$	DMA DONE	138	I/O	A30	ADDRESS BUS/PORT A6 INTERRUPT ACKNOWLEDGE
19	–	Vcc SYN	SYNCHRONIZER POWER	59	–	Vcc		99	I	$\overline{IRQ7}$	INTERRUPT REQUEST LEVEL/ PORT B7,B6,B5,B3	139	I/O	A31	ADDRESS BUS/PORT A7 INTERRUPT ACKNOWLEDGE
20	O	XTAL	CRYSTAL OSCILLATOR	60	–	GND		100	I	$\overline{IRQ6}$	INTERRUPT REQUEST LEVEL/ PORT B7,B6,B5,B3	140	O	A0	ADDRESS BUS
21	–	GND		61	O	A10	ADDRESS BUS	101	I	$\overline{IRQ5}$	INTERRUPT REQUEST LEVEL/ PORT B7,B6,B5,B3	141	I	$\overline{DSACK0}$	DATA AND SIZE ACKNOWLEDGE
22	I	MODCK	CLOCK MODE SELECT/PORT B0	62	O	A9	ADDRESS BUS	102	–	Vcc		142	I	$\overline{DSACK1}$	DATA AND SIZE ACKNOWLEDGE
23	–	Vcc		63	O	A8	ADDRESS BUS	103	–	GND		143	–	Vcc	
24	O	$\overline{IPIPE}$	INSTRUCTION PIPE/ DEVELOPMENT SERIAL OUT	64	O	A7	ADDRESS BUS	104	O	$\overline{CS3}$	CHIP SELECT 3-1/INTERRUPT REQUEST LEVEL/PORT B4,B2,B1	144	–	GND	
25	I/O	$\overline{IFETCH}$	INSTRUCTION FETCH/ DEVELOPMENT SERIAL IN	65	O	A6	ADDRESS BUS	105	I	$\overline{IRQ3}$	INTERRUPT REQUEST LEVEL/ PORT B7,B6,B5,B3				
26	I	$\overline{BKPT}$	BREAKPOINT/DEVELOPMENT SERIAL CLOCK	66	O	A5	ADDRESS BUS	106	O	$\overline{CS2}$	CHIP SELECT 3-1/INTERRUPT REQUEST LEVEL/PORT B4,B2,B1				
27	O	FREEZE	FREEZE	67	O	A4	ADDRESS BUS	107	O	$\overline{CS1}$	CHIP SELECT 3-1/INTERRUPT REQUEST LEVEL/PORT B4,B2,B1				
28	I	TIN1	TIMER INPUT	68	–	Vcc		108	O	$\overline{CS0}$	CHIP SELECT 0/AUTOVECTOR				
29	O	TOUT1	TIMER OUTPUT	69	–	GND		109	I/O	D0	DATA BUS				
30	I	$\overline{TGATE1}$	TIMER GATE	70	O	A3	ADDRESS BUS	110	I/O	D1	DATA BUS				
31	I	TCK	TEST CLOCK	71	O	A2	ADDRESS BUS	111	I/O	D2	DATA BUS				
32	I	TMS	TEST MODE SELECT	72	O	A1	ADDRESS BUS	112	I/O	D3	DATA BUS				
33	I	TDI	TEST DATA IN	73	I	$\overline{TGATE2}$	TIMER GATE	113	–	Vcc					
34	O	TDO	TEST DATA OUT	74	O	TOUT2	TIMER OUTPUT	114	–	GND					
35	–	Vcc		75	I	TIN2	TIMER INPUT	115	I/O	D4	DATA BUS				
36	–	GND		76	I	RxDA	RECEIVE DATA	116	I/O	D5	DATA BUS				
37	O	FC3	FUNCTION CODE	77	O	TxDA	TRANSMIT DATA	117	I/O	D6	DATA BUS				
38	O	FC2	FUNCTION CODE	78	–	Vcc		118	I/O	D7	DATA BUS				
39	O	FC1	FUNCTION CODE	79	–	GND		119	I/O	D8	DATA BUS				
40	O	FC0	FUNCTION CODE	80	O	$\overline{RTSA}$	REQUEST-TO-SEND/OP1,OP0	120	I/O	D9	DATA BUS				

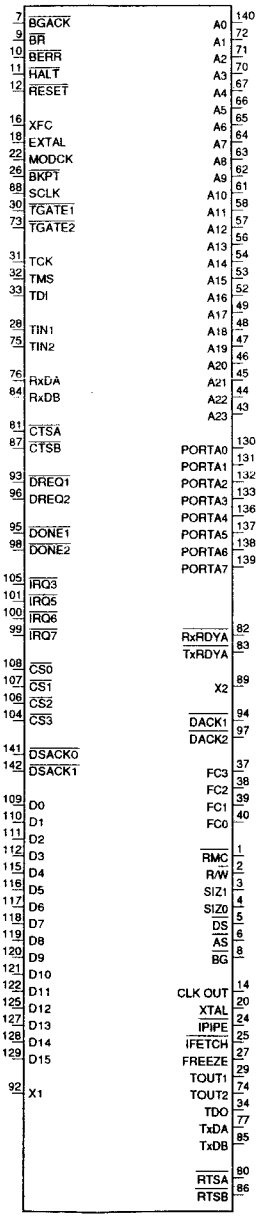
7 BGACK
9 BR
10 BERR
11 HALT
12 RESET
16 XFC
18 EXTAL
22 MODCK
26 BKPT
88 SCLK
30 TGATE1
73 TGATE2
31 TCK
32 TMS
33 TDI
28 TIN1
75 TIN2
76 RxDA
84 RxDB
81 CTSA
87 CTSB
93 DREQ1
96 DREQ2
95 DONE1
98 DONE2
105 IRQ3
101 IRQ5
100 IRQ6
99 IRQ7
108 CS0
107 CS1
106 CS2
104 CS3
141 DSACK0
142 DSACK1
109 D0
110 D1
111 D2
112 D3
115 D4
116 D5
117 D6
118 D7
119 D8
120 D9
121 D10
122 D11
125 D12
127 D13
128 D14
129 D15
92 X1
140 A0
72 A1
71 A2
70 A3
67 A4
66 A5
65 A6
64 A7
63 A8
62 A9
61 A10
58 A11
57 A12
56 A13
54 A14
53 A15
52 A16
49 A17
48 A18
47 A19
46 A20
45 A21
44 A22
43 A23
130 PORTA0
131 PORTA1
132 PORTA2
133 PORTA3
136 PORTA4
137 PORTA5
138 PORTA6
139 PORTA7
82 RxRDYA
83 TxRDYA
89 X2
94 DACK1
97 DACK2
37 FC3
38 FC2
39 FC1
40 FC0
1 RMC
2 R/W
3 SIZ1
4 SIZ0
5 DS
6 AS
8 BG
14 CLK OUT
20 XTAL
24 IPIPE
25 IFETCH
27 FREEZE
29 TOUT1
74 TOUT2
34 TDO
77 TxDA
85 TxDB
80 RTSA
86 RTSB

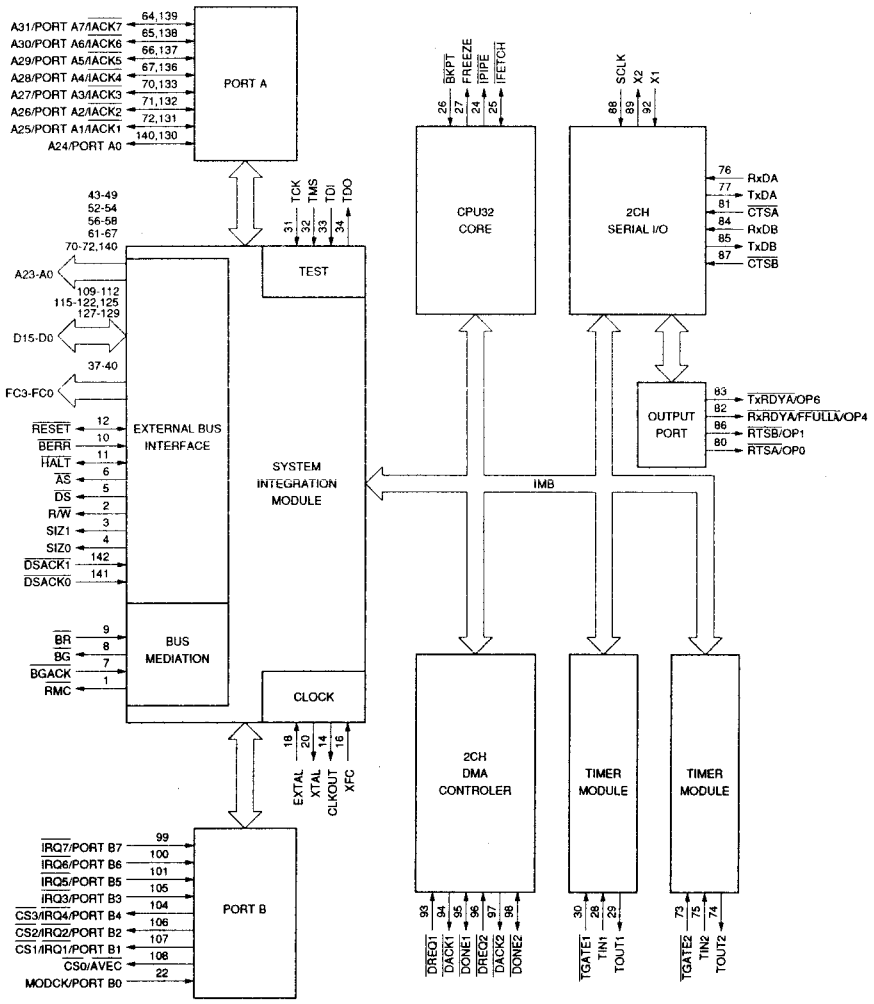
A31/PORT A7/IACK7
A30/PORT A6/IACK6
A29/PORT A5/IACK5
A28/PORT A4/IACK4
A27/PORT A3/IACK3
A26/PORT A2/IACK2
A25/PORT A1/IACK1
A24/PORT A0
PORT A
TCK
TMS
TDI
TDO
TEST
A23-A0
D15-D0
FC3-FC0
RESET
BERR
HALT
AS
DS
R/W
SIZ1
SIZ0
DSACK1
DSACK0
EXTERNAL BUS INTERFACE
SYSTEM INTEGRATION MODULE
BUS MEDIATION
CLOCK
BR
BG
BGACK
RMC
EXTAL
XTAL
CLKOUT
XFC
IRQ7/PORT B7
IRQ6/PORT B6
IRQ5/PORT B5
IRQ3/PORT B3
CS3/IRQ4/PORT B4
CS2/IRQ2/PORT B2
CS1/IRQ1/PORT B1
CS0/AVEC
MODCK/PORT B0
PORT B
BKPT
FREEZE
IPIPE
IFETCH
CPU32 CORE
SCLK
X2
X1
2CH SERIAL I/O
RxDA
TxDA
CTSA
RxDB
TxDB
CTSB
OUTPUT PORT
TxRDYA/OP6
RxRDYA/FFULLA/OP4
RTSB/OP1
RTSA/OP0
IMB
2CH DMA CONTROLER
TIMER MODULE
TIMER MODULE
DREQ1
DACK1
DONE1
DREQ2
DACK2
DONE2
TGATE1
TIN1
TOUT1
TGATE2
TIN2
TOUT2

MSM6524GS-VK (OKI) FLAT PACKAGE

C-MOS 12 CHANNELS 8-BITS D-A CONVERTER WITH 96-BIT EEPROM
– TOP VIEW –

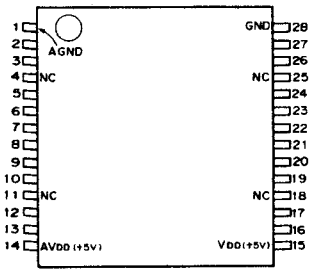

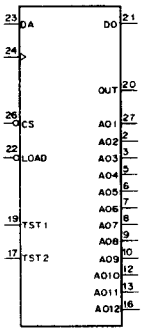

PIN No.	I/O	SIGNAL	PIN No.	I/O	SIGNAL
1	–	A GND	15	–	V_{DD} (+ 5 V)
2	O	AO2	16	O	AO12
3	O	AO3	17	I	TST2
4	–	NC	18	–	NC
5	O	AO4	19	I	TST1
6	O	AO5	20	O	OUT
7	O	AO6	21	O	DO
8	O	AO7	22	I	$\overline{LOAD}$
9	O	AO8	23	I	DA
10	O	AO9	24	I	CLK
11	–	NC	25	–	NC
12	O	AO10	26	I	$\overline{CS}$
13	O	AO11	27	O	AO1
14	–	AV_{DD} (+ 5 V)	28	–	GND

INPUT
CLK : SHIFT CLOCK
CS : WRITE MODE PROTECT
DA : SERIAL DATA
LOAD : LOAD INPUT OF 8-BIT SHIFT REGISTER
TST1, TST2 : TEST PINS

OUTPUT
AO0 – AO12 : 8-BIT D/A OUTPUTS
DO : LSB BIT DATA OF 8-BIT SHIFT REGISTER
OUT : MONITOR PIN

MODE (1) WRITE

1st BYTE								2nd BYTE							
D0	D1	D2	D3	D4	D5	D6	D7	D0	D1	D2	D3	D4	D5	D6	D7
1	0	0	1	A0	A1	A2	A3	10	11	12	13	14	15	16	17
MODE SELECT				ADDRESS SELECT				DA DATA SET							

MODE (2) LOAD

1st BYTE								2nd BYTE							
D0	D1	D2	D3	D4	D5	D6	D7	D0	D1	D2	D3	D4	D5	D6	D7
1	1	1	1	A0	A1	A2	A3	10	11	12	13	14	15	16	17
MODE SELECT				ADDRESS SELECT				DA DATA SET							

MODE (3) MEMORY TEST

1st BYTE								2nd BYTE							
D0	D1	D2	D3	D4	D5	D6	D7	D0	D1	D2	D3	D4	D5	D6	D7
0	0	1	1	A0	A1	A2	A3	O0	O1	O2	O3	O4	O5	O6	O7
MODE SELECT				ADDRESS SELECT				MEMORY DATA OUTPUT							

0 : LOW LEVEL
1 : HIGH LEVEL

MODE SELECT

D0	D1	D2	D3	MODE SELECT
1	0	0	1	MODE1
1	1	1	1	MODE2
0	0	1	1	MODE3
OTHERS				DON'T CARE

ADDRESS SELECT

D4	D5	D6	D7	ADDRESS SELECT
A0	A1	A2	A3	
0	0	0	0	DON'T CARE
1	0	0	0	AO1
0	1	0	0	AO2
1	1	0	0	AO3
0	0	1	0	AO4
1	0	1	0	AO5
0	1	1	0	AO6
1	1	1	0	AO7
0	0	0	1	AO8
1	0	0	1	AO9
0	1	0	1	AO10
1	1	0	1	AO11
0	0	1	1	AO12
1	0	1	1	DON'T CARE
0	1	1	1	DON'T CARE
1	1	1	1	DON'T CARE

D/A OUTPUT

D0	D1	D2	D3	D4	D5	D6	D7	D/A OUTPUT
I0	I1	I2	I3	I4	I5	I6	I7	
0	0	0	0	0	0	0	0	≒ VOLA + (VOHA – VOLA) / 256 × 1
1	0	0	0	0	0	0	0	≒ VOLA + (VOHA – VOLA) / 256 × 2
0	1	0	0	0	0	0	0	≒ VOLA + (VOHA – VOLA) / 256 × 3
1	1	0	0	0	0	0	0	≒ VOLA + (VOHA – VOLA) / 256 × 4
0	0	1	0	0	0	0	0	≒ VOLA + (VOHA – VOLA) / 256 × 5
⟩	⟩	⟩	⟩	⟩	⟩	⟩	⟩	⟩ ⟩ ⟩
0	0	1	1	1	1	1	1	≒ VOLA + (VOHA – VOLA) / 256 × 256
1	0	1	1	1	1	1	1	≒ VOLA + (VOHA – VOLA) / 256 × 254
0	1	1	1	1	1	1	1	≒ VOLA + (VOHA – VOLA) / 256 × 255
1	1	1	1	1	1	1	1	≒ VOLH

0 : LOW LEVEL
1 : HIGH LEVEL

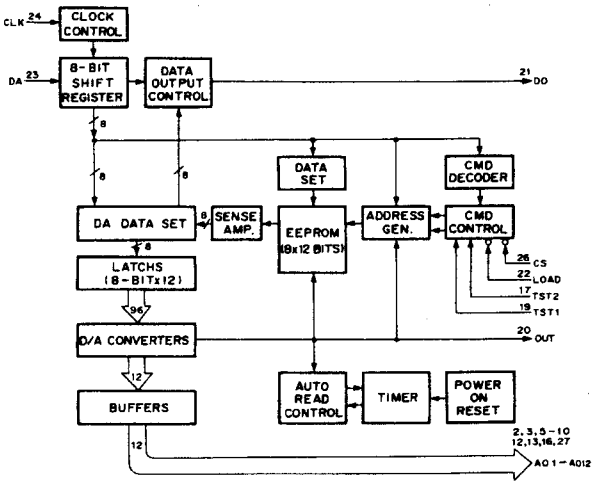

NJM072BM (JRC) FLAT PACKAGE

LOW NOISE OPERATIONAL AMPLIFIER
– TOP VIEW –

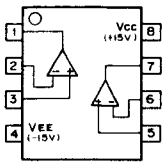

NJM360M (JRC) FLAT PACKAGE

HIGH SPEED VOLTAGE COMPARATOR\ (TTL OUTPUT)
– TOP VIEW –

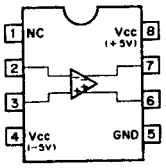

NJM2406F (JRC) FLAT PACKAGE

SINGLE COMPARATOR
– TOP VIEW –

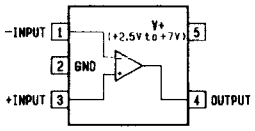

NJM386BM (JRC) FLAT PACKAGE

AUDIO POWER AMPLIFIER
– TOP VIEW –

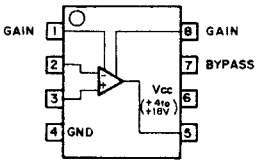

NJM2904M (JRC) FLAT PACKAGE

OPERATIONAL AMPLIFIER
– TOP VIEW –

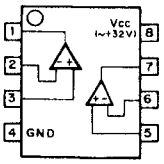

NJM431U (JRC)

ADJUSTABLE PRECISION SHUNT REGULATOR
– FRONT VIEW –

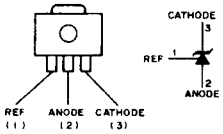

NJM3403AM (JRC) FLAT PACKAGE

QUAD OPERATIONAL AMPLIFIER
– TOP VIEW –

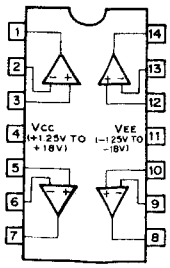

NJM4556M (JRC) FLAT PACKAGE

OPERATIONAL AMPLIFIER\ (WIDE BAND, DECOMPENSATED)
– TOP VIEW –

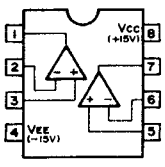

NJM4565M-A (JRC) FLAT PACKAGE

DUAL OPERATIONAL AMPLIFIER
– TOP VIEW –

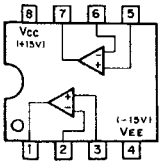

NJM4580E (JRC) FLAT PACKAGE

OPERATIONAL AMPLIFIER
– TOP VIEW –

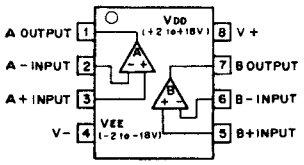

NJM5534M (JRC) FLAT PACKAGE

OPERATINAL AMPLIFIER
– TOP VIEW –

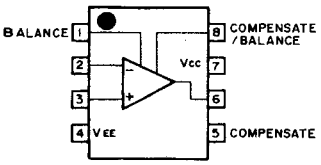

NJM78L05A (JRC) +5 V (100 mA)

POSITIVE VOLTAGE REGULATOR
– TOP VIEW –

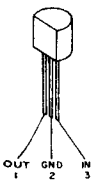

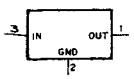

NJM78L05UA (JRC) +5 V (100 mA)

POSITIVE VOLTAGE REGULATOR
– SIDE VIEW –

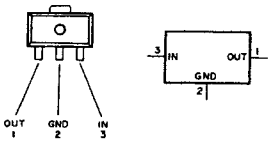

NJM79L05UA (JRC) –5 V (100 mA)

VOLTAGE REGULATOR
– SIDE VIEW –

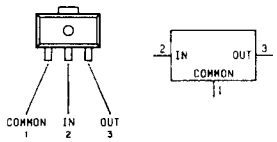

PCM69U-J (NBB)

C-MOS DUAL 18-BIT D/A CONVERTER
– TOP VIEW –

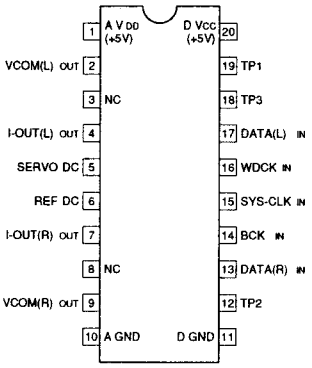

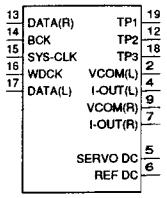

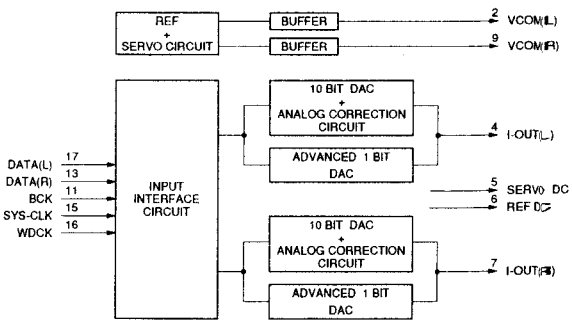

REF-03GS (PMI)

REFERENCE/TEMPERATURE TRANSDUCER
– TOP VIEW –

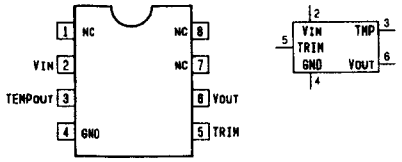

VIN : INPUT VOLTAGE (+4.5V to +33V)
TEMPOUT : TEMPERATURE TRANSDUCER VOLTAGE OUTPUT
TRIMIN : OUTPUT SIGNAL TRIMMING
VOUT : OUTPUT VOLTAGE (+2.5V)

S-8052-ANY-NH (SEIKO I AND E)

C-MOS VOLTAGE DETECTOR
– TOP VIEW –

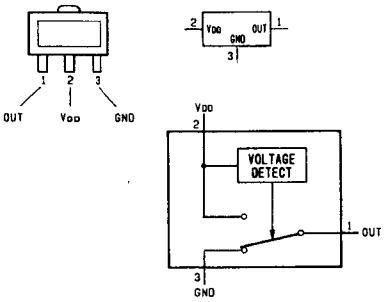

S-8052ALY (SEIKO I AND E) 2.60 V—2.80 V
S-8054HN (SEIKO I AND E) 3.80 V—4.20 V

C-MOS VOLTAGE DETECTOR
– TOP VIEW –

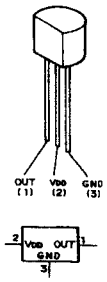

SBX1601A (SONY)

8- OR 10-BIT PARALLEL-TO-SERIAL CONVERTER
– BOTTOM VIEW –

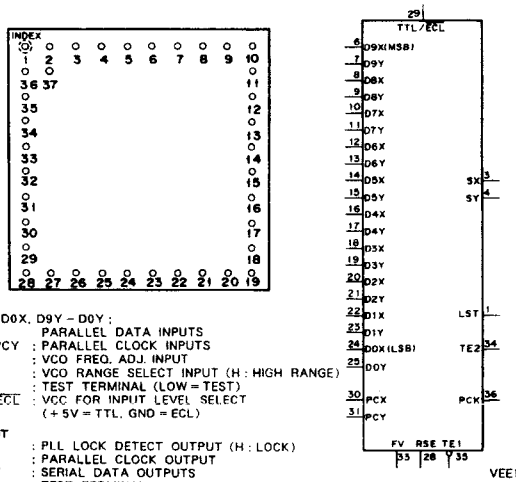

INPUT
D9X – D0X, D9Y – D0Y : PARALLEL DATA INPUTS
PCX, PCY : PARALLEL CLOCK INPUTS
FV : VCO FREQ. ADJ. INPUT
RSE : VCO RANGE SELECT INPUT (H : HIGH RANGE)
TE1 : TEST TERMINAL (LOW = TEST)
TTL/$\overline{ECL}$: VCC FOR INPUT LEVEL SELECT (+5V = TTL, GND = ECL)

OUTPUT
LST : PLL LOCK DETECT OUTPUT (H : LOCK)
PCK : PARALLEL CLOCK OUTPUT
SX, SY : SERIAL DATA OUTPUTS
TE2 : TEST TERMINAL

VEE1 = – 5V
VEE2 = – 3.5V

PIN NO.	I/O	SIGNAL	PIN NO.	I/O	SIGNAL	PIN NO.	I/O	SIGNAL	PIN NO.	I/O	SIGNAL
1	O	LST	11	I	D7Y	21	I	D2Y	31	I	PCY
2	–	GND	12	I	D6X	22	I	D1X	32	–	GND
3	O	SX	13	I	D6Y	23	I	D1Y	33	I	FV
4	O	SY	14	I	D5X	24	I	D0X(LSB)	34	O	TE2
5	–	GND	15	I	D5Y	25	I	D0Y	35	I	TE1
6	I	D9X(MSB)	16	I	D4X	26	–	VEE1	36	O	PCK
7	I	D9Y	17	I	D4Y	27	–	VEE2	37	–	NC
8	I	D8X	18	I	D3X	28	I	RSE			
9	I	D8Y	19	I	D3Y	29	–	TTL/ECL			
10	I	D7X	20	I	D2X	30	I	PCX			

SBX1602A (SONY)

8- OR 10-BIT SERIAL-TO-PARALLEL CONVERTER
– TOP VIEW –

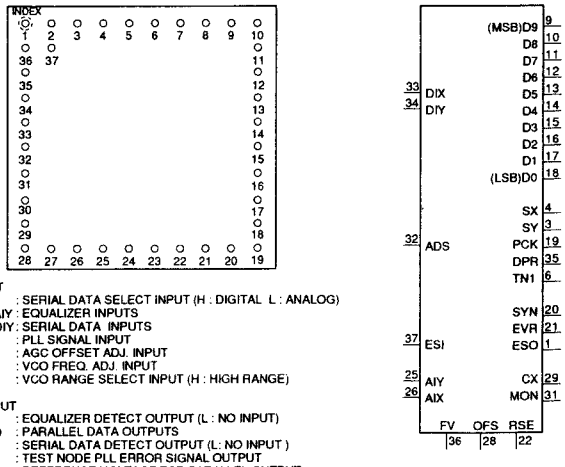

INPUT
ADS : SERIAL DATA SELECT INPUT (H : DIGITAL L : ANALOG)
AIX, AIY : EQUALIZER INPUTS
DIX, DIY : SERIAL DATA INPUTS
ESI : PLL SIGNAL INPUT
OFS : AGC OFFSET ADJ. INPUT
FV : VCO FREQ. ADJ. INPUT
RSE : VCO RANGE SELECT INPUT (H : HIGH RANGE)

OUTPUT
CX : EQUALIZER DETECT OUTPUT (L : NO INPUT)
D9-D0 : PARALLEL DATA OUTPUTS
DPR : SERIAL DATA DETECT OUTPUT (L: NO INPUT)
ESO : TEST NODE PLL ERROR SIGNAL OUTPUT
EVR : REFERENCE VOLTAGE FOR PARALLEL OUTPUT
MON : EQUALIZER MONITOR OUTPUT
PCK : PARALLEL CLOCK OUTPUT
SX,SY : SERIAL DATA OUTPUTS
SYN : TRS DETECT OUTPUT
TN1 : TEST TERMINAL

VEE1, 3 = –5V
VEE2 = –3.5V

PIN NO.	I/O	SIGNAL	PIN NO.	I/O	SIGNAL	PIN NO.	I/O	SIGNAL	PIN NO.	I/O	SIGNAL
1	O	ESO	11	O	D7	21	O	EVR	31	O	MON
2	–	GND	12	O	D6	22	I	RSE	32	I	ADS
3	O	SY	13	O	D5	23	–	VEE3	33	I	DIX
4	O	SX	14	O	D4	24	–	GND	34	I	DIY
5	–	GND	15	O	D3	25	I	AIY	35	O	DPR
6	O	TN1	16	O	D2	26	I	AIX	36	I	FV
7	–	VEE1	17	O	D1	27	–	GND	37	I	ESI
8	–	VEE2	18	O	D0 (LSB)	28	I	OFS			
9	O	D9 (MSB)	19	O	PCK	29	O	CX			
10	O	D8	20	O	SYN	30	–	GND			

S-81250HG-RD (SEIKO I AND E) +5.0V FLAT PACKAGE

THREE TERMINAL POSITIVE VOLTAGE REGULATOR

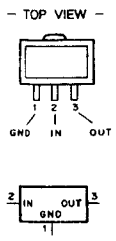

TC4S81F (TOSHIBA) CHIP PACKAGE
TC7S08F (TOSHIBA) CHIP PACKAGE

C-MOS 2-INPUT AND GATE

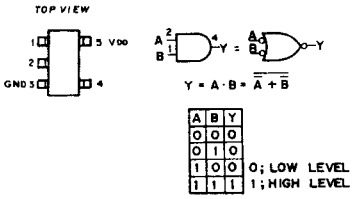

A	B	Y
0	0	0
0	1	0
1	0	0
1	1	1

0 ; LOW LEVEL
1 ; HIGH LEVEL

TYPE	VDD
7S08F 7S08FU	+2 to +6V
4S81F 14S81F	+3 to +18V
7SH08FU	−2 to +5.5V

TC4W53F (TOSHIBA) CHIP PACKAGE (5.0 × 3.1)
TC4W53FU (TOSHIBA) CHIP PACKAGE

C-MOS 2-CHANNEL MULTIPLEXER/DEMULTIPLEXER

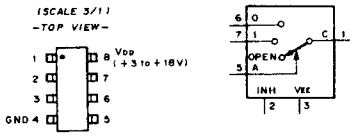

CONT. INPUT		ON CHANNEL
INH	A	
0	0	0
0	1	1
1	X	OPEN

0 ; LOW LEVEL
1 ; HIGH LEVEL
X ; DON'T CARE

SN74HCT244ANS (TI) FLAT PACKAGE
TC74VHC244F (TOSHIBA) FLAT PACKAGE
TC74VHC244FS (TOSHIBA) FLAT PACKAGE (SMALL)
TC74VHCT244FS (TOSHIBA) FLAT PACKAGE

C-MOS BUS BUFFER WITH 3-STATE OUTPUTS
–TOP VIEW–

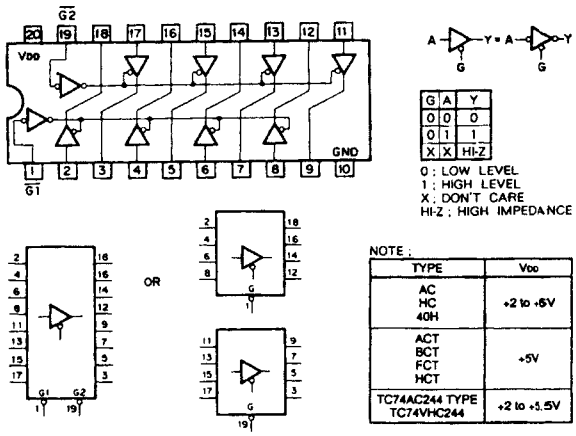

G	A	Y
0	0	0
0	1	1
X	X	HI-Z

0 ; LOW LEVEL
1 ; HIGH LEVEL
X ; DON'T CARE
HI-Z ; HIGH IMPEDANCE

NOTE ;

TYPE	VDD
AC HC 40H	+2 to +6V
ACT BCT FCT HCT	+5V
TC74AC244 TYPE TC74VHC244	+2 to +5.5V

TC7S86F (TOSHIBA) CHIP PACKAGE
TC7S86FU (TOSHIBA) CHIP PACKAGE

C-MOS 2-INPUT EXCLUSIVE OR GATE

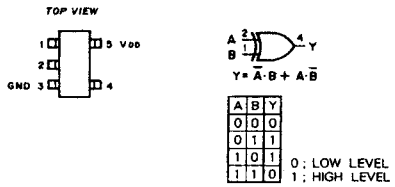

A	B	Y
0	0	0
0	1	1
1	0	1
1	1	0

0 ; LOW LEVEL
1 ; HIGH LEVEL

SC7S04F (MOTOROLA) CHIP PACKAGE
TC4S69F (TOSHIBA) CHIP PACKAGE
TC4SU69F (TOSHIBA) CHIP PACKAGE

C-MOS INVERTER
– TOP VIEW –

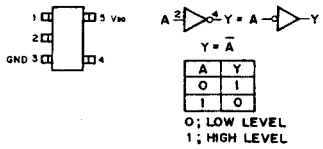

A	Y
0	1
1	0

0 ; LOW LEVEL
1 ; HIGH LEVEL

TYPE	VDD
7S04F 7SU04F	+ 2 to + 6V
4S69F 4SU69F	+ 3 to + 18V
7SH04FU	+ 2 to + 5.5V

SC7S32F (MOTOROLA) CHIP PACKAGE
TC7SH32FU (TOSHIBA) CHIP PACKAGE

C-MOS 2-INPUT OR GATE
– TOP VIEW –

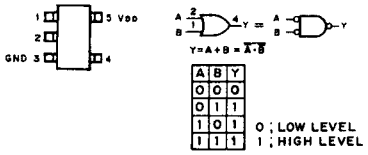

A	B	Y
0	0	0
0	1	1
1	0	1
1	1	1

0 ; LOW LEVEL
1 ; HIGH LEVEL

TYPE	VDD
7S32F 7S32FU	+ 2 to + 6V
4S71F	+ 3 to + 18V
7SH32FU	– 2 to + 5.5V

SN74HC00ANS (TI) FLAT PACKAGE
TC74VHC00F (TOSHIBA) FLAT PACKAGE
TC74VHC00FS (EL) (TOSHIBA) FLAT PACKAGE (SMALL)

C-MOS QUAD 2-INPUT NAND GATES
– TOP VIEW –

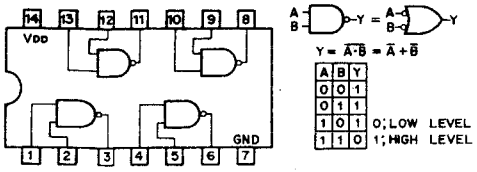

A	B	Y
0	0	1
0	1	1
1	0	1
1	1	0

0; LOW LEVEL
1; HIGH LEVEL

NOTE :

TYPE	VDD
TC74AC00 TYPE TC74VHC00	+2 to +5.5V
MC74HCT00N	+5V
74ACT00 TYPE	+4.5 to +5.5V
OTHER TYPES	+2 to +6V

SM5843AS1 (NPC)

C-MOS DIGITAL FILTER
– TOP VIEW –

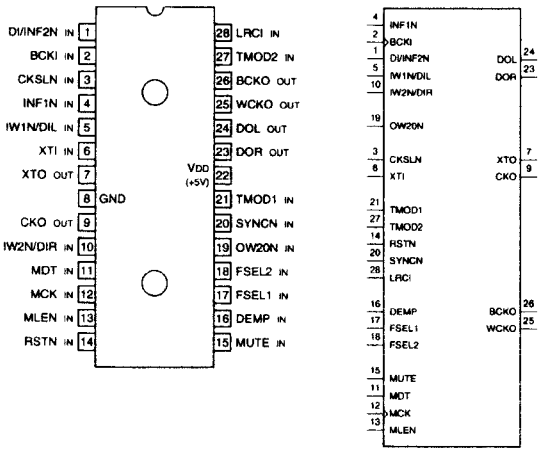

INPUT
BCKI ; INPUT BIT CLOCK
CKSLN ; INPUT FREQUENCY SELECT (H: 384fs/L: 256fs)
DEMP ; DE-EMPHASIS CONTROL (L: OFF/H: ON)
DI/INF2N ; INPUT DATA (INF1N = L)/INPUT FORMAT SELECT 2 (INF1N = H)
FSEL1, 2 ; DE-EMPHASIS SELECT

fs (Hz)		32k	44.1k	48k	TEST MODE
SETTING	FSEL1	H	L	L	H
	FSEL2	H	L	H	L

INF1N ; INPUT FORMAT SELECT 1
IW1N/DIL ; INPUT WORD LENGTH 1 (INF1N = L)/Lch DATA INPUT (TNF1N = H)
IW2N/DIR ; INPUT WORD LENGTH 2 (INF1N = L)/Rch DATA INPUT (TNF1N = H)
LRCI ; SAMPLE RATE CLOCK (fs)
MCK ; ATTENUATION BIT CLOCK
MDT ; ATTENUATION SERIAL DATA
MLEN ; ATTENUATION LATCH CLOCK
MUTE ; MUTE CONTROL
OW20N ; OUTPUT WORD LENGTH

OUTPUT WORD LENGTH (BIT)	18	20
OW20N	H	L

RSTN ; SYSTEM RESET (L: RESET/H: NORMAL)
SYNCN ; SYNC MODE SELECT (L: EXECUTION SYNC MODE/H: JITTER FREE MODE)
TMOD1 ; DITHER ON/OFF SELECT (L: ON/H: OFF)
TMOD2 ; FILTER CHARACTER SELECT
XTI ; OSCILLATOR INPUT

OUTPUT
BCKO ; OUTPUT BIT CLOCK
CKO ; OSCILLATOR OUTPUT CLOCK
DOL ; Lch DATA
DOR ; Rch DATA
WCKO ; OUTPUT WORD CLOCK
XTO ; OSCILLATOR OUTPUT

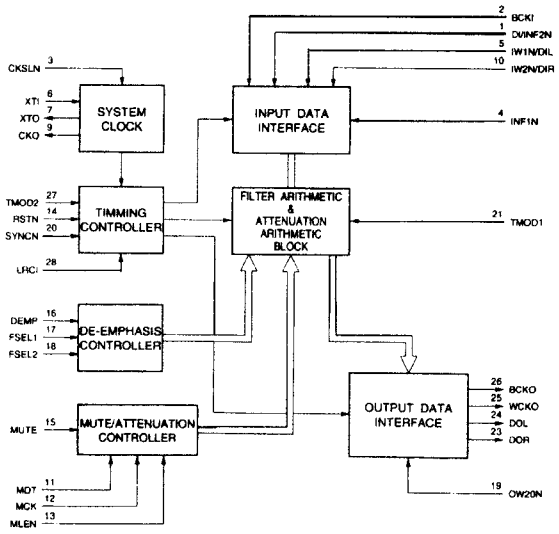

SN74HC05ANS (TI) FLAT PACKAGE

C-MOS HEX INVERTER WITH OPEN-DRAIN
– TOP VIEW –

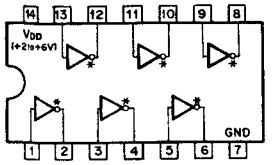

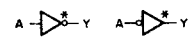

$Y = \overline{A}$

A	Y
0	1
1	0

0 ; LOW LEVEL
1 ; HIGH LEVEL
* ; OPEN DRAIN

SN74HC10ANS (TI) FLAT PACKAGE

C-MOS 3-INPUT NAND GATE
– TOP VIEW –

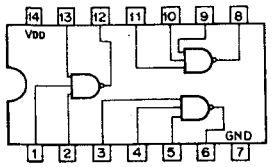

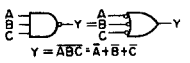

$Y = \overline{ABC} = \overline{A}+\overline{B}+\overline{C}$

A	B	C	Y
0	0	0	1
0	0	1	1
0	1	0	1
0	1	1	1
1	0	0	1
1	0	1	1
1	1	0	1
1	1	1	0

0 ; LOW LEVEL
1 ; HIGH LEVEL

NOTE :

TYPE	VDD
TC40H	+ 2 to + 8V
OTHERS	+ 2 to + 6V

SN74HC151ANS (TI) FLAT PACKAGE

C-MOS 8-LINE-TO-1-LINE DATA SELECTOR/MULTIPLEXER
– TOP VIEW –

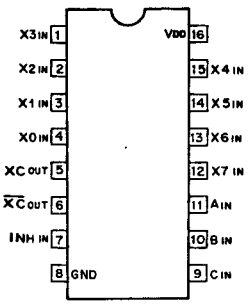

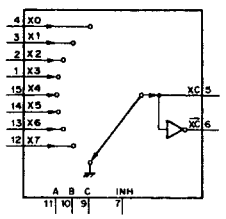

CONTROL INPUTS				ON
INH	C	B	A	CHANNEL
0	0	0	0	0
0	0	0	1	1
0	0	1	0	2
0	0	1	1	3
0	1	0	0	4
0	1	0	1	5
0	1	1	0	6
0	1	1	1	7
1	X	X	X	GND

0 ; LOW LEVEL
1 ; HIGH LEVEL
X ; DON'T CARE

NOTE :

TYPE	VDD
HC	+2 to +6V
AC/VHC	+2 to +5.5V
HCT/ACT/FCT	+5V

SN74HC165ANS (TI) FLAT PACKAGE
TC74VHC165FS (TOSHIBA) FLAT PACKAGE

C-MOS SERIAL- OR PARALLEL-INPUT SHIFT REGISTER
– TOP VIEW –

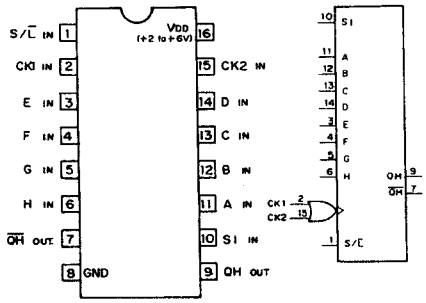

SI ; SERIAL DATA IN
A–H ; PARALLEL DATA IN
CK1,CK2 ; CLOCK IN (↓)
S/L ; SHIFT/LOAD IN
QH QH ; 8th BIT OUT (COMPLEMENTALY)

INPUTS				CONTENTS		OUTPUT	OPERATION
S/L	CK1+CK2	SI	A·····H	QA	QB····	QH	
0	X	X	a·····h	a	b·····	h	PARALLEL LOAD
1	↓	0	X	0	QAo···	QGo	RIGHT SHIFT
1	↓	1	X	1	QAo···	QGo	
1	↑	X	X	QAo	QBo····	QHo	NO COUNT
1	0	X	X	QAo	QBo····	QHo	
1	1	X	X	QAo	QBo····	QHo	

0 ; LOW LEVEL 1 ; HIGH LEVEL X ; DON'T CARE
a – h ; LEVEL OF INPUTS A–H
QAo–QHo ; LEVEL OF QA–QH BEFORE THE INDICATED INPUT CONDITIONS WERE ESTABLISHED

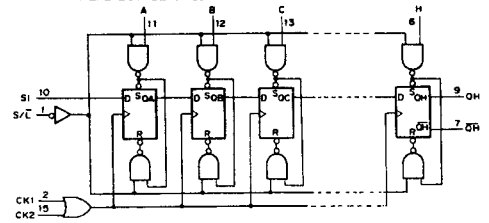

SN74HC175ANS (TI) FLAT PACKAGE
TC74VHC175FS (TOSHIBA) FLAT PACKAGE

C-MOS QUAD D-TYPE FLIP-FLOPS WITH RESET
– TOP VIEW –

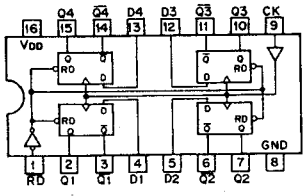

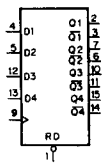

RD	CK	D	Q	$\overline{Q}$
0	X	X	0	1
1	↑	1	1	0
1	↑	0	0	1
1	0	X	Qo	$\overline{Q}$o

0 ; LOW LEVEL
1 ; HIGH LEVEL
X ; DON'T CARE
Qo ; NO CHANGE
$\overline{Q}$o ; NO CHANGE

NOTE :

TYPE	VDD
AC TYPE	+2 to +5.5 V
74ACT175 TYPE	+4.5V to 5.5 V
OTHER TYPES	+2 to +6 V

SN74HC245ANS (TI) FLAT PACKAGE
SN74HCT245ANS (TI) FLAT PACKAGE
SN74LVT245NS (TI) FLAT PACKAGE
TC74VHC245F (TOSHIBA) FLAT PACKAGE
TC74VHC245FS (EL) (TOSHIBA) FLAT PACKAGE (SMALL)

C-MOS BILATERAL BUS TRANSCEIVERS WITH 3-STATE OUTPUTS
– TOP VIEW –

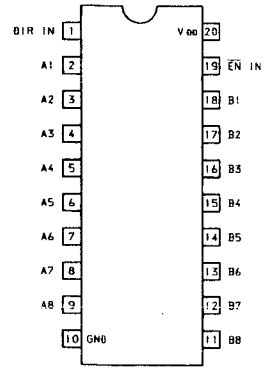

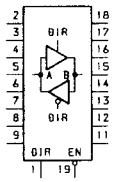

$\overline{EN}$	DIR	OPERATION
0	0	B to A
0	1	A to B
1	X	HI-Z

0:LOW LEVEL
1:HIGH LEVEL
X:DON'T CARE
HI-Z:HIGH IMPEDANCE

NOTE:

TYPE	VDD
AC HC	+2 to +6V
ABT ACT BCT HCT	+5V
TC74AC245F TC74AC245P TC74VHC245	+2 to +5.5V
74LVT	+2.7 to +3.6V

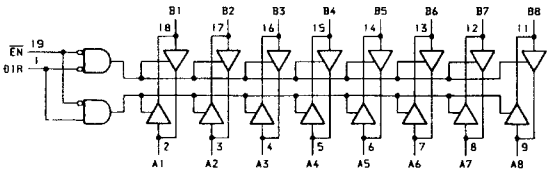

SN74HC4040ANS (TI) FLAT PACKAGE

C-MOS 12-STAGE RIPPLE CARRY BINARY COUNTER/DIVIDER
– TOP VIEW –

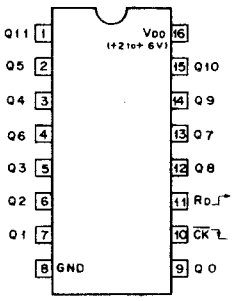

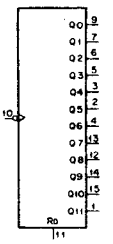

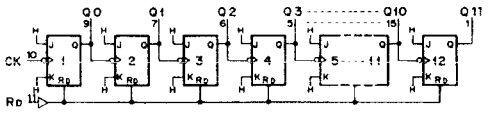

COUNT	Q11	Q10	Q9	Q8	Q7	Q6	Q5	Q4	Q3	Q2	Q1	Q0
0	0	0	0	0	0	0	0	0	0	0	0	0
1	0	0	0	0	0	0	0	0	0	0	0	1
2	0	0	0	0	0	0	0	0	0	0	1	0
3	0	0	0	0	0	0	0	0	0	0	1	1
⋮	⋮	⋮	⋮	⋮	⋮	⋮	⋮	⋮	⋮	⋮	⋮	⋮
4095	1	1	1	1	1	1	1	1	1	1	1	1

RD	Q11 ····· Q0
1	ALL LOW
0	COUNT

0; LOW LEVEL
1; HIGH LEVEL

SN74HC374ANS (TI) FLAT PACKAGE
TC74VHC374FS (TOSHIBA) FLAT PACKAGE

C-MOS 3-STATE OCTAL D-TYPE FLIP-FLOP
– TOP VIEW –

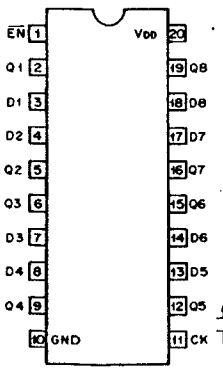

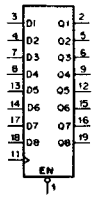

INPUTS			OUT
EN	D	CK	Q
0	1	↑	1
0	0	↑	0
0	X	0	Q_0
1	X	X	HI-Z

0 ; LOW LEVEL
1 ; HIGH LEVEL
X ; DON'T CARE
HI-Z ; HIGH IMPEDANCE

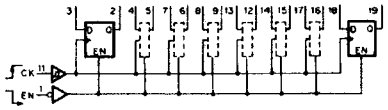

NOTE :

TYPE	VCC
74AC/74HC	+2 to +6V
74ACT/74BCT/74FCT /74HCT	+5V
74VHC	+2 to +5.5V

SN74LS221NS (TI) FLAT PACKAGE

TTL MONOSTABLE MULTIVIBRATOR WITH SCHMITT TRIGGER INPUT
– TOP VIEW –

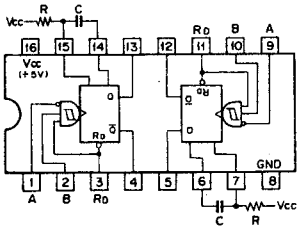

INPUTS			OUTPUTS	
RD	A	B	Q	$\overline{Q}$
0	X	X	0	1
X	1	X	0	1
X	X	0	0	1
1	0	↑	⎍	⎍
1	↓	1	⎍	⎍
↑	0	1	⎍	⎍

0; LOW LEVEL
1; HIGH LEVEL
X; DON'T CARE

OUTPUT PULSE WIDTH = 0.7CR

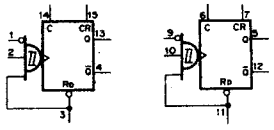

T6963C (TOSHIBA)

C-MOS DOT MATRIX LCD CONTROLLER
– TOP VIEW –

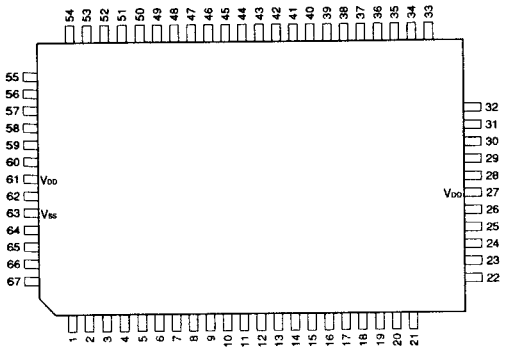

PIN No.	I/O	SIGNAL	PIN No.	I/O	SIGNAL	PIN No.	I/O	SIGNAL	PIN No.	I/O	SIGNAL
1	I	$\overline{HALT}$	18	I	$\overline{WR}$	35	O	ad2	52	O	ED
2	I	$\overline{RESET}$	19	I	$\overline{RD}$	36	O	ad3	53	O	HSCP
3	I	MDS	20	I	$\overline{CE}$	37	O	ad4	54	I	$\overline{DUAL}$
4	I	MD0	21	I	C/D	38	O	ad5	55	O	LP
5	I	MD1	22	I/O	d0	39	O	ad6	56	O	CDATA
6	I	MD2	23	I/O	d1	40	O	ad7	57	O	FR
7	I	MD3	24	I/O	d2	41	O	ad8	58	O	CH1
8	I	FS0	25	I/O	d3	42	O	ad9	59	O	CH2
9	I	FS1	26	I/O	d4	43	O	ad10	60	O	DSPON
10	I/O	D0	27	–	VDD	44	O	ad11	61	–	VDD
11	I/O	D1	28	I/O	d5	45	O	ad12	62	I	$\overline{SDSEL}$
12	I/O	D2	29	I/O	d6	46	O	ad13	63	–	Vss
13	I/O	D3	30	I/O	d7	47	O	ad14	64	I	$\overline{T2}$
14	I/O	D4	31	O	r/w	48	O	ad15	65	I	$\overline{T1}$
15	I/O	D5	32	O	ce	49	O	ce0	66	I	X1
16	I/O	D6	33	O	ad0	50	O	ce1	67	O	X0
17	I/O	D7	34	O	ad1	51	O	HOD	–	–	–

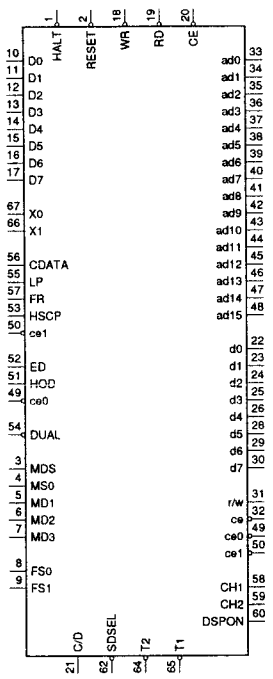

INPUT

C/D	; COMMAND/DATA SELECT
CE	; CHIP ENABLE
DUAL	; DUAL LCD SELECT
FS0, FS1	; FONT SELECT
HALT	; HALT
MDS	; DISPLAY COLUMN SELECT
MD0-3	; DISPLAY COLUMN SELECT
RD	; READ
RESET	; RESET
SDSEL	; INPUT DATA SELECT (NORMAL/DUAL)
T1, T2	; TEST1, 2
WR	; WRITE
X1	; CRYSTAL OSCILLATOR

OUTPUT

ad0-ad15	; ADDRESS BUS
CDATA	; SYNC
ce, ce0, ce1	; MEMORY CHIP ENABLE
CH1, CH2	; CHECK1, 2
DSPON	; EXTERNAL DC/DC CONVERTER CONTROL
ED	; SERIAL DATA FOR LCD
FR	; FRAME SIGNAL
HOD	; SERIAL DATA FOR UPPER LCD
HSCP	; SHIFT CLOCK PULSE
LP	; LATCH PULSE/CLOCK PULSE
r/w	; MEMORY READ/WRITE
X0	; CRYSTAL OSCILLATOR

INPUT/OUTPUT

D0-D7	; DATA BUS
d0-d7	; MEMORY DATA BUS

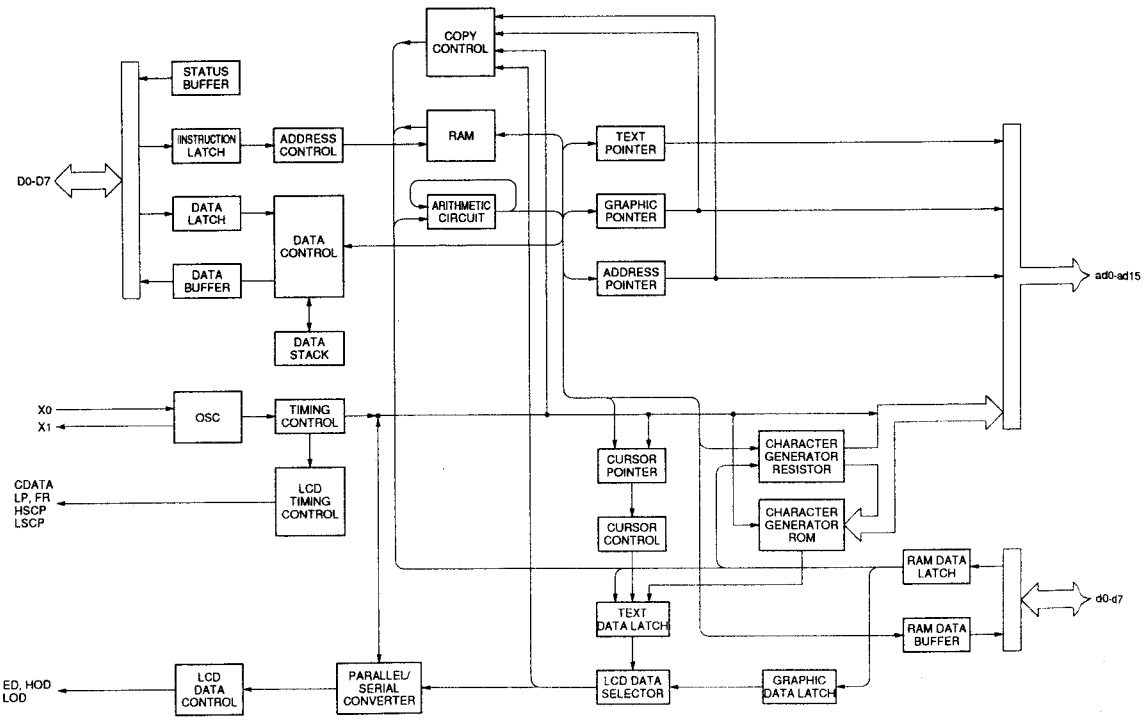

TA7291F (TOSHIBA) FLAT PACKAGE

DC MOTOR FULLBRIDGE DRIVER
– TOP VIEW –

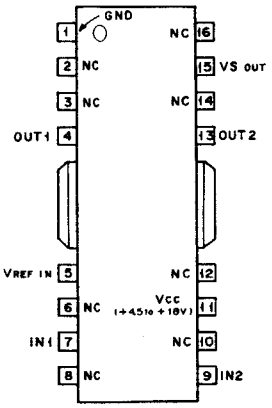

INPUT		OUTPUT		MODE
IN1	IN2	OUT1	OUT2	
0	0	HI-Z	HI-Z	STOP
1	0	1	0	CW/CCW
0	1	0	1	CCW/CW
1	1	0	0	BRAKE

0 ; LOW LEVEL
1 ; HIGH LEVEL
HI-Z; HIGH IMPEDANCE

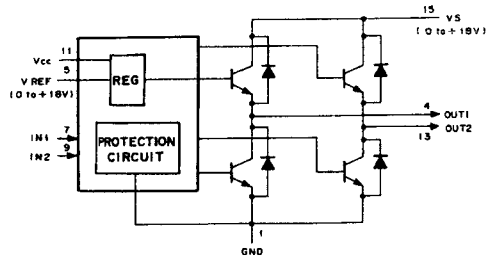

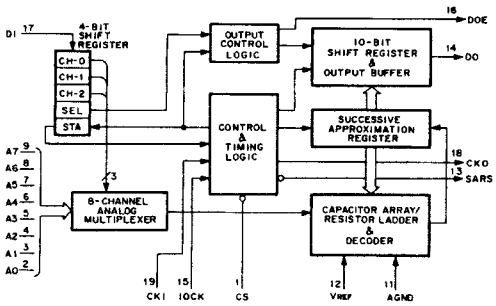

TC4S66F (TOSHIBA) CHIP PACKAGE

C-MOS BILATERAL ANALOG SWITCH
– TOP VIEW –

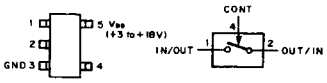

CONT	SWITCH
0	OFF
1	ON

0 ; LOW LEVEL
1 ; HIGH LEVEL

TC35080P (TOSHIBA)

C-MOS 10-BIT SERIAL I/O A/D CONVERTER
– TOP VIEW –

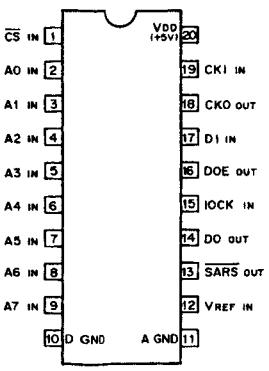

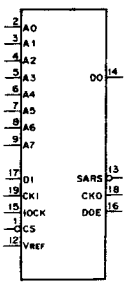

INPUT
A0 – A7 : ANALOG
CKI : CLOCK
CS : CHIP SELECT
DI : DATA
IOCK : I/O CLOCK
VREF : REFERENCE VOLTAGE

OUTPUT
CKO : CLOCK
DO : DATA
DOE : DATA OUTPUT ENABLE
SARS : SUCCESSIVE APPROXIMATION REGISTER STATUS

TC4W66FU (TOSHIBA) CHIP PACKAGE

C-MOS DUAL BILATERAL SWITCH
– TOP VIEW –

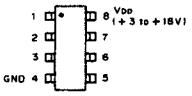

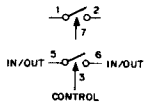

CONTROL	SWITCH
0	OFF
1	ON

0 ; LOW LEVEL
1 ; HIGH LEVEL

TC74HC123AF (TOSHIBA) FLAT PACKAGE
TC74VHC123AF (TOSHIBA) FLAT PACKAGE
TC74VHC123AFS (TOSHIBA) FLAT PACKAGE

C-MOS DUAL RETRIGGERABLE MONOSTABLE MULTIVIBRATORS
– TOP VIEW –

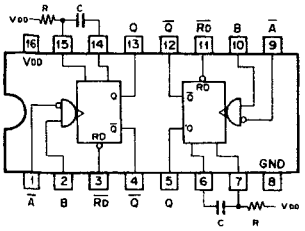

INPUT			OUTPUT	
RD	A	B	Q	$\overline{Q}$
0	X	X	0	1
1	1	X	0	1
1	X	0	0	1
1	0	↑	⊓	⊓
1	↓	1	⊓	⊓
↓	0	1	⊓	⊓

0 ; LOW LEVEL
1 ; HIGH LEVEL
X ; DON'T CARE

OUTPUT PULSE WIDTH = 0.46CR

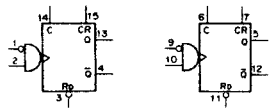

NOTE :

TYPE	VDD
TC74HCT123AF	+5V
OTHER TYPES	+2 to +6V

TC74HC221AF (TOSHIBA) FLAT PACKAGE
TC74VHC221AF (TOSHIBA) FLAT PACKAGE

C-MOS MONOSTABLE MULTIVIBRATOR WITH SCHMITT TRIGGER INPUT
– TOP VIEW –

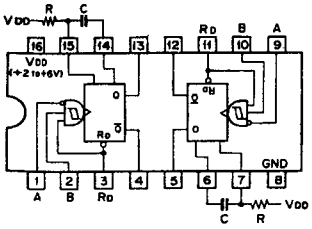

INPUTS			OUTPUTS	
RD	A	B	Q	$\overline{Q}$
0	X	X	0	1
X	1	X	0	1
X	X	0	0	1
1	0	↑	⊓	⊓
1	↓	1	⊓	⊓
↑	0	1	⊓	⊓

0;LOW LEVEL
1;HIGH LEVEL
X;DON'T CARE

OUTPUT PULSE WIDTH = 0.7CR

TC74HC688AF (TOSHIBA) FLAT PACKAGE

C-MOS 8-BIT EQUALITY DETECTOR
– TOP VIEW –

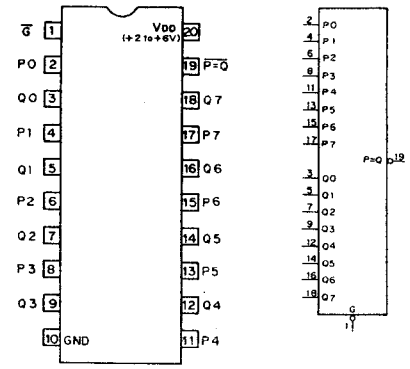

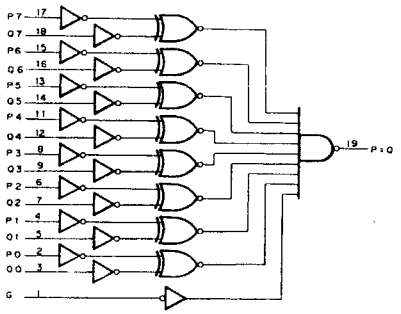

INPUTS		OUTPUT
P,Q	G	P = Q
P=Q	0	0
P>Q	0	1
P<Q	0	1
X	1	1

0; LOW LEVEL
1; HIGH LEVEL
X; DON'T CARE

TC74HCT540AF (TOSHIBA) FLAT PACKAGE

C-MOS 3-STATE OCTAL INVERTING BUFFERS/DRIVERS
– TOP VIEW –

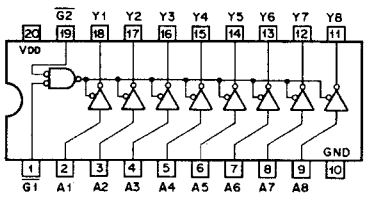

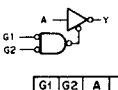

G1	G2	A	Y
0	0	0	1
0	0	1	0
1	X	X	HI-Z
X	1	X	HI-Z

0; LOW LEVEL
1; HIGH LEVEL
X; DON'T CARE
HI-Z; HIGH IMPEDANCE

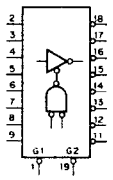

NOTE :

TYPE	VDD
HC	+2 to +6V
AC/VHC	+2 to +5.5V
HCT/ACT/VHCT	+5V

TC74VHC132FS (TOSHIBA) FLAT PACKAGE

C-MOS 2-INPUT NAND SCHMITT TRIGGER
– TOP VIEW –

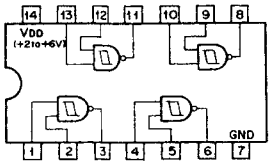

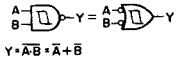

0 ; LOW LEVEL
1 ; HIGH LEVEL

NOTE :

TYPE	VDD
HC	+2 to +6V
VHC	+2 to +5.5V

TC74VHC157FS (TOSHIBA) FLAT PACKAGE (SMALL)

C-MOS QUAD 2-LINE-TO-1-LINE DATA SELECTOR/MULTIPLEXER
– TOP VIEW –

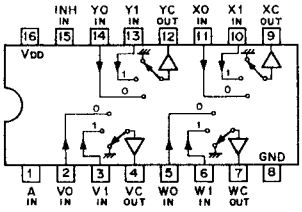

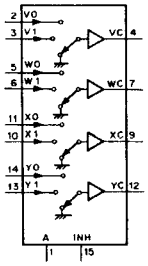

NOTE :

TYPE	VDD
74ACT/74FCT	+5V
TC74AC157P TC74AC157	+2 to +5.5V
TC40H	+2 to +8V
OTHER TYPES	+2 to +6V

CONT. IN		ON CHANNEL
INH	A	
0	0	0
0	1	1
1	X	GND

0 ; LOW LEVEL
1 ; HIGH LEVEL
X ; DON'T CARE

TC74VHC138FS (EL) (TOSHIBA) FLAT PACKAGE (SMALL)

C-MOS 3-TO-8 LINE DECODER/DEMULTIPLEXER
– TOP VIEW –

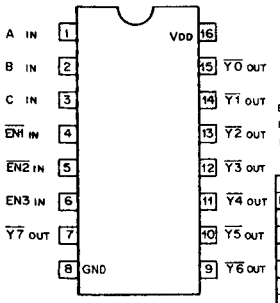

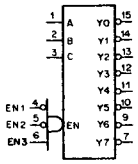

INPUTS				OUTPUTS							
EN	C	B	A	Y7	Y6	Y5	Y4	Y3	Y2	Y1	Y0
0	X	X	X	1	1	1	1	1	1	1	1
1	0	0	0	1	1	1	1	1	1	1	0
1	0	0	1	1	1	1	1	1	1	0	1
1	0	1	0	1	1	1	1	1	0	1	1
1	0	1	1	1	1	1	1	0	1	1	1
1	1	0	0	1	1	1	0	1	1	1	1
1	1	0	1	1	1	0	1	1	1	1	1
1	1	1	0	1	0	1	1	1	1	1	1
1	1	1	1	0	1	1	1	1	1	1	1

EN = $\overline{EN1} \cdot \overline{EN2} \cdot EN3$

0 ; LOW LEVEL
1 ; HIGH LEVEL
X ; DON'T CARE

NOTE :

TYPE	VDD
74HCT138 TYPE	+5V
74ACT138 TYPE	+4.5 to +5.5V
TC74AC138 TYPE TC74VHC138	+2 to +5.5V
OTHER TYPES	+2 to +6V

TC74VHC163F (TOSHIBA) FLAT PACKAGE

C-MOS PRESETTABLE SYNCHRONOUS 4-BIT BINARY COUNTER
– TOP VIEW –

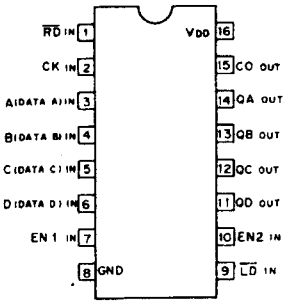

MODE SELECTION

CONTROL INPUTS				MODE
RD	LD	EN1	EN2	
0	X	X	X	RESET (SYNCHRONOUS)
1	0	X	X	PRESET (SYNCHRONOUS)
1	1	0	↑	NO COUNT
1	1	↑	0	NO COUNT
1	1	1	1	COUNT

CARRY OUTPUT "CO"

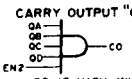

CO IS HIGH WHEN EN2 INPUT IS HIGH AND COUNT IS "15".

NOTE :

TYPE	VDD
HC	+2 to +6V
AC/VHC	+2 to +5.5V
HCT/ACT/FCT	+5V

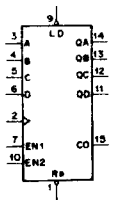

COUNT SEQUENCE

COUNT	OUTPUTS			
	QD	QC	QB	QA
0	0	0	0	0
1	0	0	0	1
2	0	0	1	0
3	0	0	1	1
4	0	1	0	0
5	0	1	0	1
6	0	1	1	0
7	0	1	1	1
8	1	0	0	0
9	1	0	0	1
10	1	0	1	0
11	1	0	1	1
12	1	1	0	0
13	1	1	0	1
14	1	1	1	0
15	1	1	1	1

TC74VHC164F (TOSHIBA) FLAT PACKAGE

C-MOS 8-BIT SERIAL-IN/PARALLEL-OUT SHIFT REGISTER
– TOP VIEW –

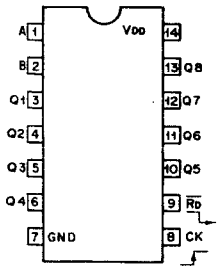

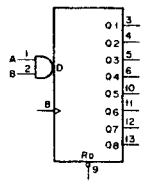

INPUTS				OUTPUTS			
RD	CK	A	B	Q1	Q2	----	Q8
0	X	X	X	0	0	----	0
1	0	X	X	Q1o	Q2o	----	Q8o
1	↑	1	1	1	Q1n	----	Q7n
1	↑	0	X	0	Q1n	----	Q7n
1	↑	X	0	0	Q1n	----	Q7n

0;LOW LEVEL
1;HIGH LEVEL
X;DON'T CARE

NOTE :

TYPE	VDD
AC/VHC	+2 to +5.5V
HC	+2 to +6V
HCT	+5V

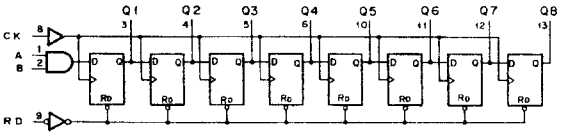

TC74VHC174F (TOSHIBA) FLAT PACKAGE

C-MOS D-TYPE FLIP-FLOP WITH RESET
– TOP VIEW –

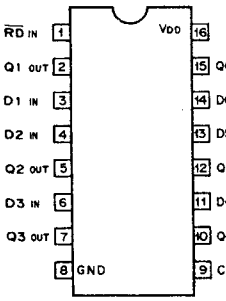

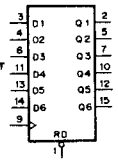

EACH FLIP - FLOP

INPUTS			OUT
RD	CK	D	Q
0	X	X	0
1	↑	0	0
1	↑	1	1
1	0	X	Q0

0;LOW LEVEL
1;HIGH LEVEL
X;DON'T CARE

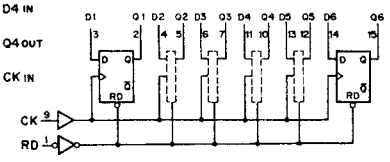

NOTE :

TYPE	VDD
74AC	+3.3 to +5V
74ACT	+5V
74HC	+2 to +6V
TC74AC174	+2 to +5.5V

TC74VHC21F (TOSHIBA) FLAT PACKAGE

C-MOS DUA4-INPUT POSITIVEAND GATE
– TOP VIEW –

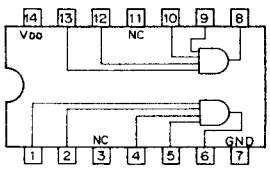

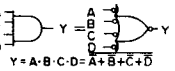

A	B	C	D	Y
0	0	0	0	0
0	0	0	1	0
0	0	1	0	0
0	0	1	1	0
0	1	0	0	0
:	:	:	:	:
1	1	0	1	0
1	1	1	0	0
1	1	1	1	1

0;LOW LEVEL
1;HIGH LEVEL

NOTE :

TYPE	VDD
HC	+2 to +6V
VHC	+2 to +5.5V

TC74VHC240F (TOSHIBA) FLAT PACKAGE

C-MOS 3-STATE INVERTER/LINE DRIVER
– TOP VIEW –

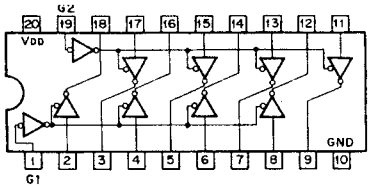

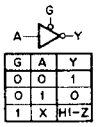

G	A	Y
0	0	1
0	1	0
1	X	HI-Z

0;LOW LEVEL
1;HIGH LEVEL
X;DON'T CARE
HI-Z;HIGH IMPEDANCE

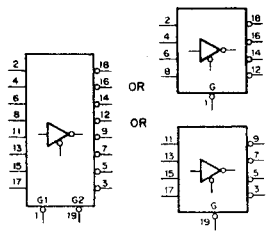

NOTE :

TYPE	VDD
74AC/74HC	+2 to +6V
74ACT/74HCT TC74BC240F TC74BC240P	+5V
TC74AC240F TC74AC240P TC74VHC240	+2 to +5.5V

TC74VHC27FS (TOSHIBA) FLAT PACKAGE

C-MOS 3-LINE POSITIVE-NOR GATE
– TOP VIEW –

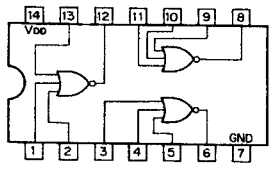

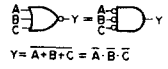

A	B	C	Y
0	0	0	1
0	0	1	0
0	1	0	0
0	1	1	0
1	0	0	0
1	0	1	0
1	1	0	0
1	1	1	0

0 ; LOW LEVEL
1 ; HIGH LEVEL

NOTE :

TYPE	VDD
TC40H	+ 2 to + 8V
OTHERS	+ 2 to + 6V

TC74VHC368FS (TOSHIBA) FLAT PACKAGE

C-MOS BUS INVERTER WITH 3-STATE OUTPUTS
– TOP VIEW –

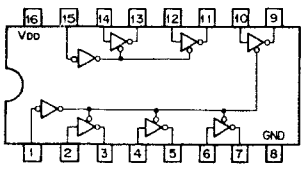

G	A	Y
0	0	1
0	1	0
1	X	HI-Z

0 ; LOW LEVEL
1 ; HIGH LEVEL
X ; DON'T CARE
HI-Z ; HIGH IMPEDANCE

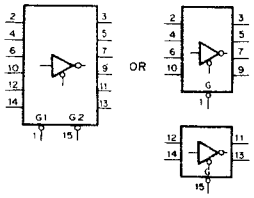

NOTE :

TYPE	VDD
HC	+2 to +6V
VHC	+2 to +5.5V

TC74VHC86F (TOSHIBA) FLAT PACKAGE

C-MOS QUAD EXCLUSIVE OR GATES
– TOP VIEW –

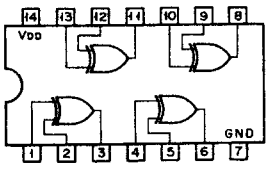

$Y = \bar{A} \cdot B + A \cdot \bar{B}$

A	B	Y
0	0	0
0	1	1
1	0	1
1	1	0

0 ; LOW LEVEL
1 ; HIGH LEVEL

NOTE :

TYPE	VDD
TC74AC/VHC	+2 to +5.5V
TC74HCT	+5V
OTHER TYPES	+2 to +6V

TC74VHC574F (TOSHIBA) FLAT PACKAGE
TC74VHC574FS (EL) (TOSHIBA) FLAT PACKAGE (SMALL)

C-MOS 3-STATE D-TYPE EDGE-TRIGGERED FLIP-FLOP
– TOP VIEW –

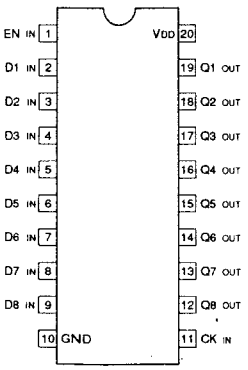

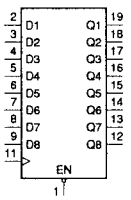

EACH FLIP-FLOP

INPUTS			OUT
EN	CK	D	Q
0	↑	1	1
0	↑	0	0
0	↓	X	Q_0
1	X	X	HI-Z

0 ; LOW LEVEL
1 ; HIGH LEVEL
X ; DON'T CARE
HI-Z ; HIGH IMPEDANCE
Q_0 ; NO CHANGE

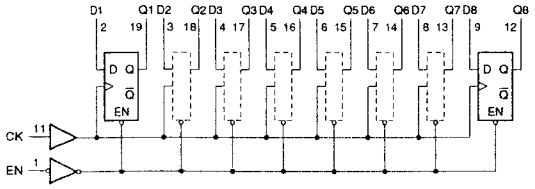

NOTE:

TYPE	VDD
HC	+2 to +6V
AC/VHC	+2 to +5.5V
ACT/FCT/HCT	+5V

TC7W04FU (TOSHIBA) CHIP PACKAGE

C-MOS HEX INVERTERS
– TOP VIEW –

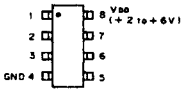

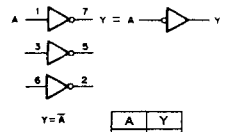

A	Y
0	1
1	0

0 ; LOW LEVEL
1 ; HIGH LEVEL

TC7W08FU (TOSHIBA) CHIP PACKAGE

C-MOS DUAL 2-INPUT AND GATE
– TOP VIEW –

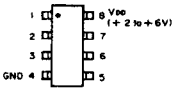

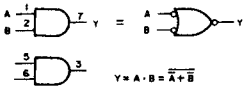

A	B	Y
0	0	0
0	1	0
1	0	0
1	1	1

0 ; LOW LEVEL
1 ; HIGH LEVEL

TC7W74FU (TOSHIBA) CHIP PACKAGE

C-MOS D-TYPE FLIP-FLOPS WITH DIRECT SET/RESET
– TOP VIEW –

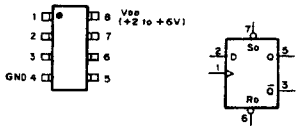

INPUTS				OUTPUTS	
$\overline{So}$	$\overline{Ro}$	CK	D	Qn+1	$\overline{Qn+1}$
0	1	X	X	1	0
1	0	X	X	0	1
0	0	X	X	1	1
1	1	↑	1	1	0
1	1	↑	0	0	1
1	1	↓	X	Qn	$\overline{Qn}$

0 ; LOW LEVEL
1 ; HIGH LEVEL
X ; DON'T CARE

TE7751 (TKE)

C-MOS SUPER I/O EXPANDER (8 BIT × 9 CH)
– TOP VIEW –

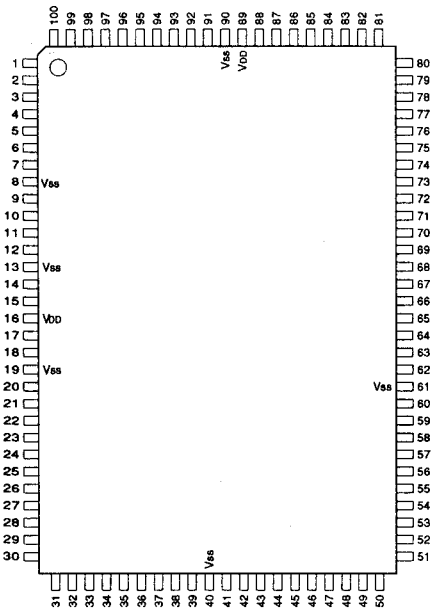

PIN No.	I/O	SIGNAL	PIN No.	I/O	SIGNAL	PIN No.	I/O	SIGNAL	PIN No.	I/O	SIGNAL
1	I/O	P81	26	I/O	P16	51	I/O	P46	76	I/O	P52
2	I/O	P82	27	I/O	P17	52	I/O	P47	77	I/O	P53
3	I/O	P83	28	I/O	P20	53	I/O	D0	78	I/O	P54
4	I/O	P84	29	I/O	P21	54	I/O	D1	79	I/O	P55
5	I/O	P85	30	I/O	P22	55	I/O	D2	80	I/O	P56
6	I/O	P86	31	I/O	P23	56	I/O	D3	81	I/O	P57
7	I/O	P87	32	I/O	P24	57	I/O	D4	82	I/O	P60
8	–	Vss	33	I/O	P25	58	I/O	D5	83	I/O	P61
9	I/O	P90	34	I/O	P26	59	I/O	D6	84	I/O	P62
10	I/O	P91	35	I/O	P27	60	I/O	D7	85	I/O	P63
11	I/O	P92	36	I/O	P30	61	–	Vss	86	I/O	P64
12	I/O	P93	37	I/O	P31	62	I	$\overline{RESET}$	87	I/O	P65
13	–	Vss	38	I/O	P32	63	I	$\overline{CS}$	88	I/O	P66
14	I/O	P94	39	I/O	P33	64	I	$\overline{RD/RW}$	89	–	VDD
15	I/O	P95	40	–	Vss	65	I	$\overline{WR/MEN}$	90	–	Vss
16	–	VDD	41	I/O	P34	66	I	A0	91	I/O	P67
17	I/O	P96	42	I/O	P35	67	I	A1	92	I/O	P70
18	I/O	P97	43	I/O	P36	68	I	A2	93	I/O	P71
19	–	Vss	44	I/O	P37	69	I	A3	94	I/O	P72
20	I/O	P10	45	I/O	P40	70	I	IOS0	95	I/O	P73
21	I/O	P11	46	I/O	P41	71	I	IOS1	96	I/O	P74
22	I/O	P12	47	I/O	P42	72	I	IOS2	97	I/O	P75
23	I/O	P13	48	I/O	P43	73	I	MS	98	I/O	P76
24	I/O	P14	49	I/O	P44	74	I/O	P50	99	I/O	P77
25	I/O	P15	50	I/O	P45	75	I/O	P51	100	I/O	P80

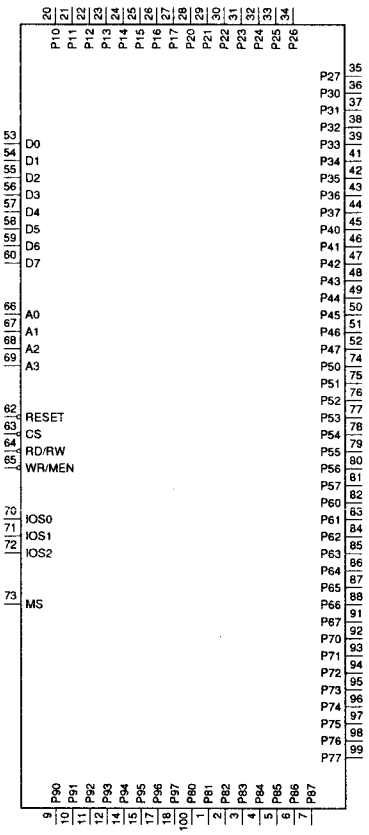

INPUT

A0-A3	; ADDRESS INPUT
CS	; CHIP SELECT
IOS0-2	; I/O SELECT
MS	; MODE SELECT
$\overline{RD}/\overline{RW}$	; READ/WRITE
RESET	; RESET
$\overline{WR/MEN}$	; WRITE/MOTOROLA ENABLE

INPUT/OUTPUT

D0-7	; DATA BUS
P10-17	; I/O PORT 1
P20-27	; I/O PORT 2
P30-37	; I/O PORT 3
P40-47	; I/O PORT 4
P50-57	; I/O PORT 5
P60-67	; I/O PORT 6
P70-77	; I/O PORT 7
P80-87	; I/O PORT 8
P90-97	; I/O PORT 9

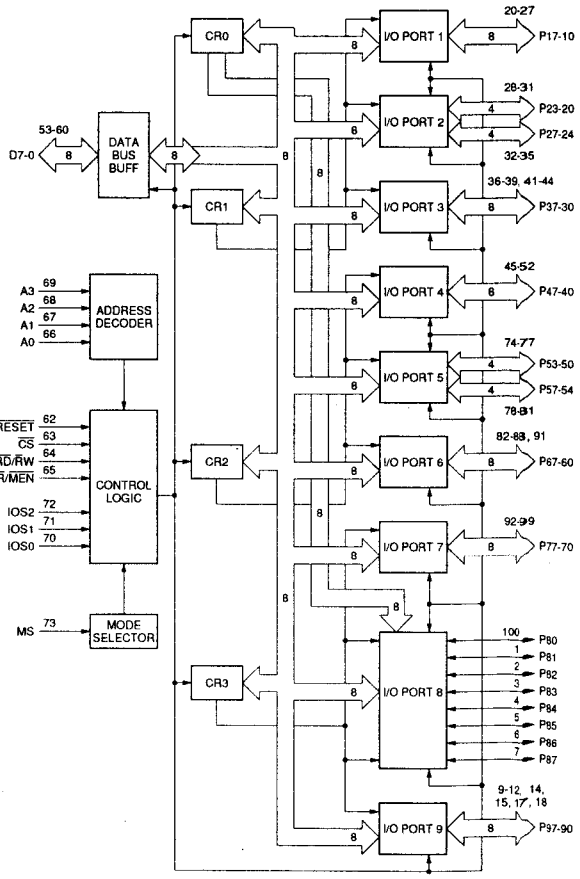

TL1451ACNS (TI) FLAT PACKAGE
TL1451ACPW (TI) FLAT PACKAGE (SMALL)

DUAL PWM POWER CONTROLLER
– TOP VIEW –

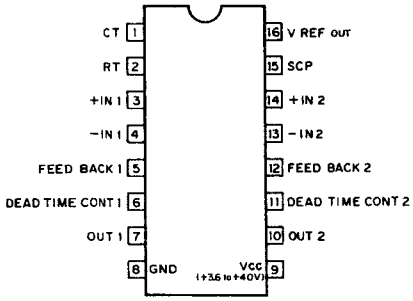

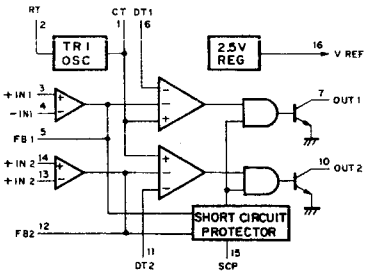

TL431CML (MOTOROLA) FLAT PACKAGE

PROGRAMMABLE SHUNT REGULATOR DIODE
– TOP VIEW –

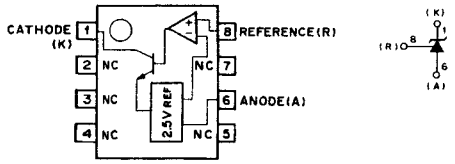

TL7705ACPS (TI) FLAT PACKAGE

POWER VOLTAGE SUPERVISOR
– TOP VIEW –

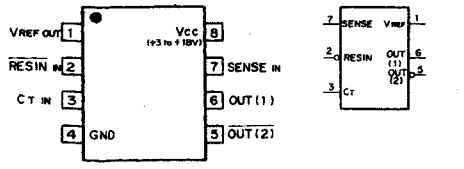

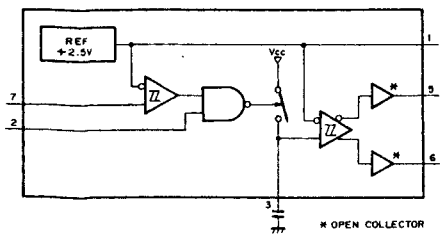

TLC272CPW (TI)

OPERATIONAL AMPLIFIER
– TOP VIEW –

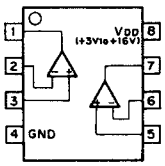

TLC274CPW (TI) FLAT PACKAGE

C-MOS OPERATIONAL AMPLIFIER
– TOP VIEW –

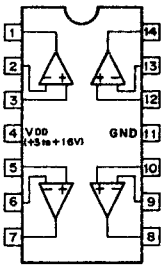

UPC1663G (NEC) FLAT PACKAGE

WIDEBAND VIDEO AMPLIFIER
– TOP VIEW –

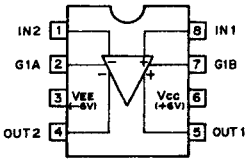

UPC311G2 (NEC) FLAT PACKAGE

VOLTAGE COMPARATOR
– TOP VIEW –

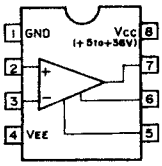

UPC319G2 (NEC) FLAT PACKAGE

DUAL VOLTAGE COMPARATOR
– TOP VIEW –

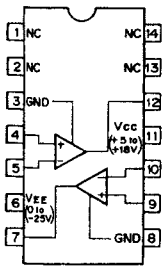

UPD42101G-3 (NEC) FLAT PACKAGE

C-MOS 7K (910 × 8) -BIT FIFO MEMORY
– TOP VIEW –

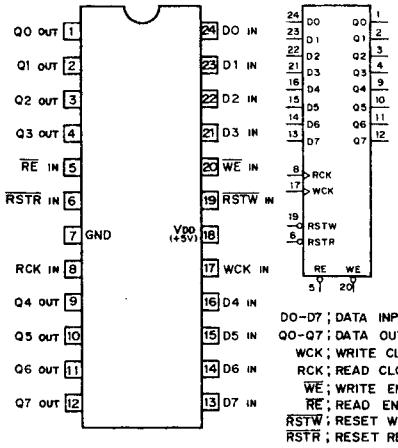

DO–D7 ; DATA INPUTS
QO–Q7 ; DATA OUTPUTS
WCK ; WRITE CLOCK INPUT
RCK ; READ CLOCK INPUT
$\overline{WE}$; WRITE ENABLE INPUT
$\overline{RE}$; READ ENABLE INPUT
$\overline{RSTW}$; RESET WRITE INPUT
$\overline{RSTR}$; RESET READ INPUT

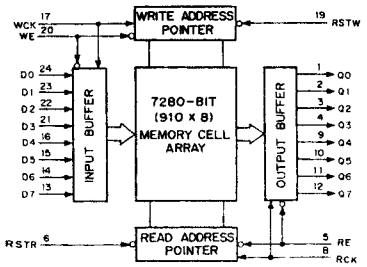

UPD434008LE-20 (NEC) CHIP CARRIER

C-MOS 4M (524288 WORD × 8) -BIT STATIC RAM
– TOP VIEW –

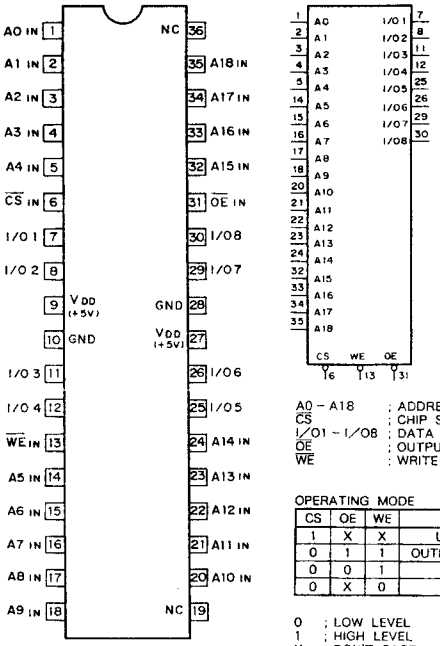

A0 – A18 ; ADDRESS INPUTS
$\overline{CS}$; CHIP SELECT INPUT
I/O1 ~ I/O8 ; DATA INPUT/OUTPUTS
$\overline{OE}$; OUTPUT ENABLE INPUT
$\overline{WE}$; WRITE ENABLE INPUT

OPERATING MODE

$\overline{CS}$	$\overline{OE}$	$\overline{WE}$	MODE	I/O1 – I/O8
1	X	X	UNSELECT	HI-Z
0	1	1	OUTPUT DISABLE	HI-Z
0	0	1	READ	DATA OUT
0	X	0	WRITE	DATA IN

0 ; LOW LEVEL
1 ; HIGH LEVEL
X ; DON'T CARE
HI-Z ; HIGH IMPEDANCE

UPD485505G-35 (NEC) FLAT PACKAGE

C-MOS 40K (5,048 × 8) -BIT FIFO MEMORY
– TOP VIEW –

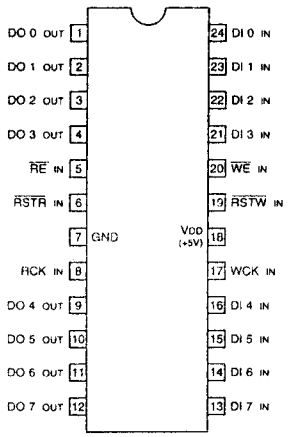

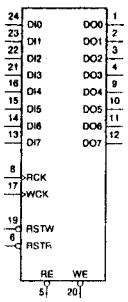

DI0-DI7 ; DATA INPUTS
DO0-DO7 ; DATA OUTPUTS
RCK ; READ CLOCK INPUT
$\overline{RE}$; READ ENABLE INPUT
$\overline{RSTR}$; RESET READ INPUT
$\overline{RSTW}$; RESET WRITE INPUT
WCK ; WRITE CLOCL INPUT
$\overline{WE}$; WRITE ENABLE INPUT

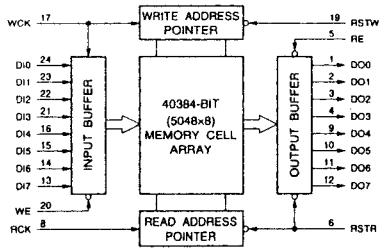

UPD75004GB-3B4 (NEC)

C-MOS 4-BIT SINGLE CHIP
– TOP VIEW –

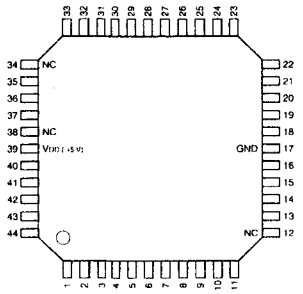

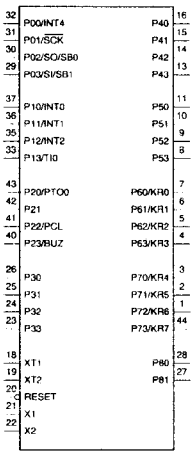

INPUT
INT0 } , INTERRUPT 0, 1, 4
INT1 }
INT4 }
INT2 ; TEST 2
KR0 - KR7 ; KEY RETURN
P10 - P13 ; PORT 1
RESET ; SYSTEM RESET
SI ; SERIAL DATA
TI0 ; TIMER INPUT 0
X1, X2 ; MAIN SYSTEM X'TAL
XT1, XT2 ; SUB SYSTEM X'TAL

OUTPUT
BUZ ; BUZZER CLOCK
PCL ; PROGRAMMABLE CLOCK
PTO0 ; PROGRAMMABLE TIMER OUTPUT 0
SO ; SERIAL DATA

INPUT/OUTPUT
P00 - P03 ; PORT 0
P20 - P23 ; PORT 2
P30 - P33 ; PORT 3
P40 - P43 ; PORT 4
P50 - P53 ; PORT 5
P60 - P63 ; PORT 6
P70 - P73 ; PORT 7
P80 - P81 ; PORT 8
SCK ; SERIAL CLOCK
SB0, SB1 ; SERIAL BUS 0, 1

(VDD = +5 V)

PIN No.	I/O	SIGNAL	PIN No.	I/O	SIGNAL	PIN No.	I/O	SIGNAL	PIN No.	I/O	SIGNAL
1	I/O	P72/KR6	12	—	NC	23	I/O	P33	34	—	NC
2	I/O	P71/KR5	13	I/O	P43	24	I/O	P32	35	I	P12/INT2
3	I/O	P70/KR4	14	I/O	P42	25	I/O	P31	36	I	P11/INT1
4	I/O	P63/KR3	15	I/O	P41	26	I/O	P30	37	I	P10/INT0
5	I/O	P62/KR2	16	I/O	P40	27	I/O	P81	38	—	NC
6	I/O	P61/KR1	17	—	GND	28	I/O	P80	39	—	VDD
7	I/O	P60/KR0	18	I	XT1	29	I/O	P03/SI/SB1	40	I/O	P23/BUZ
8	I/O	P53	19	—	XT2	30	I/O	P02/SO/SB0	41	I/O	P22/PCL
9	I/O	P52	20	I	RESET	31	I/O	P01/SCK	42	I/O	P21
10	I/O	P51	21	I	X1	32	I	P00/INT4	43	I/O	P20/PTO0
11	I/O	P50	22	I	X2	33	I	P13/TI0	44	I/O	P73/KR7

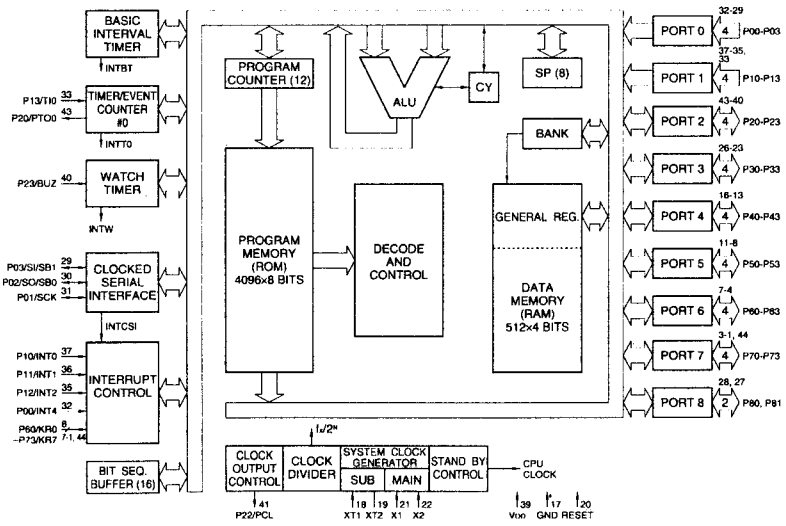

UPD78P014GC-AB8 (NEC)

C-MOS 8-BIT SINGLE CHIP MICROCOMPUTER WITH ONE TIME PROM
– TOP VIEW –

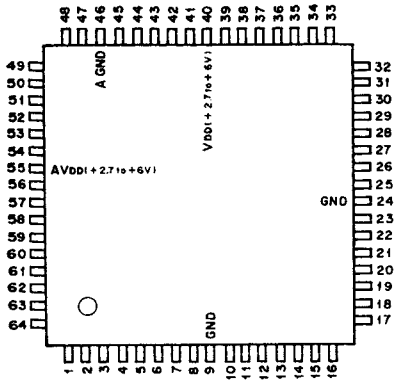

($AV_{DD} = V_{DD} = +2.7$ to $+6$ V)

PIN No.	I/O	SIGNAL	PIN No.	I/O	SIGANL	PIN No.	I/O	SIGNAL	PIN No.	I/O	SIGNAL
1	I/O	P30/TO0	17	I/O	P47/AD7	33	I/O	P66/WAIT	49	I	P12/ANI2
2	I/O	P31/TO1	18	I/O	P50/A8	34	I/O	P67/ASTB	50	I	P13/ANI3
3	I/O	P32/TO2	19	I/O	P51/A9	35	I	RESET	51	I	P14/ANI4
4	I/O	P33/TI1	20	I/O	P52/A10	36	I	P00/INTP0/TI0	52	I	P15/ANI5
5	I/O	P34/TI2	21	I/O	P53/A11	37	I/O	P01/INTP1	53	I	P16/ANI6
6	I/O	P35/PCL	22	I/O	P54/A12	38	I/O	P02/INTP2	54	I	P17/ANI7
7	I/O	P36/BUZ	23	I/O	P55/A13	39	I/O	P03/INTP3	55	–	AVDD
8	I/O	P37	24	I/O	GND	40	–	VDD	56	–	AVREF
9	–	GND	25	I/O	P56/A14	41	O	X2	57	I/O	P20/SI1
10	I/O	P40/AD0	26	I/O	P57/A15	42	I	X1	58	I/O	P21/SO1
11	I/O	P41/AD1	27	I/O	P60	43	–	Vpp	59	I/O	P22/SCK1
12	I/O	P42/AD2	28	I/O	P61	44	–	XT2	60	I/O	P23/STB
13	I/O	P43/AD3	29	I/O	P62	45	I	P04/XT1	61	I/O	P24/BUSY
14	I/O	P44/AD4	30	I/O	P63	46	–	A GND	62	I/O	P25/SI0/SB0
15	I/O	P45/AD5	31	I/O	P64/RD	47	I	P10/ANI0	63	I/O	P26/SO0/SB1
16	I/O	P46/AD6	32	I/O	P65/WR	48	I	P11/ANI1	64	I/O	P27/SCK0

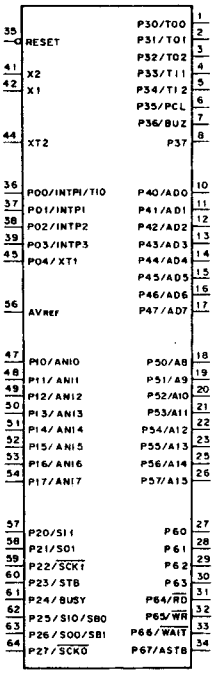

INPUT

ANI0 – ANI7	; ANALOG 0 – 7
AVREF	; ANALOG REFERENCE VOLTAGE
BUSY	; BUSY
INTP0 – INTP3	; INTERRUPT FROM PERIPHERALS 0 – 3
P00, P04	; PORT 0
P10 – P17	; PORT 1
RESET	; RESET
SI0, SI1	; SERIAL 0, 1
TI0 – TI2	; TIMER 0 – 2
WAIT	; WAIT
X1, X2	; CRYSTAL 1, 2 (MAIN SYSTEM CLOCK)
XT1, XT2	; CRYSTAL 1, 2 (SUB SYSTEM CLOCK)

OUTPUT

A8 – A15	; ADDRESS BUS 8 – 15
ASTB	; ADDRESS STROBE
BUZ	; BUZZER CLOCK
PCL	; PROGRAMMABLE CLOCK
RD	; READ STROBE
SO0, SO1	; SERIAL 0, 1
STB	; STROBE
TO0 – TO2	; TIMER 0 – 2
WR	; WRITE STROBE

INPUT/OUTPUT

AD0 – AD7	; ADDRESS/DATA BUS 0 – 7
P01 – P03	; PORT 0
P20 – P27	; PORT 2
P30 – P37	; PORT 3
P40 – P47	; PORT 4
P50 – P57	; PORT 5
P60 – P67	; PORT 6
SB0, SB1	; SERIAL BUS 0, 1
SCK0, SCK1	; SERIAL CLOCK 0, 1

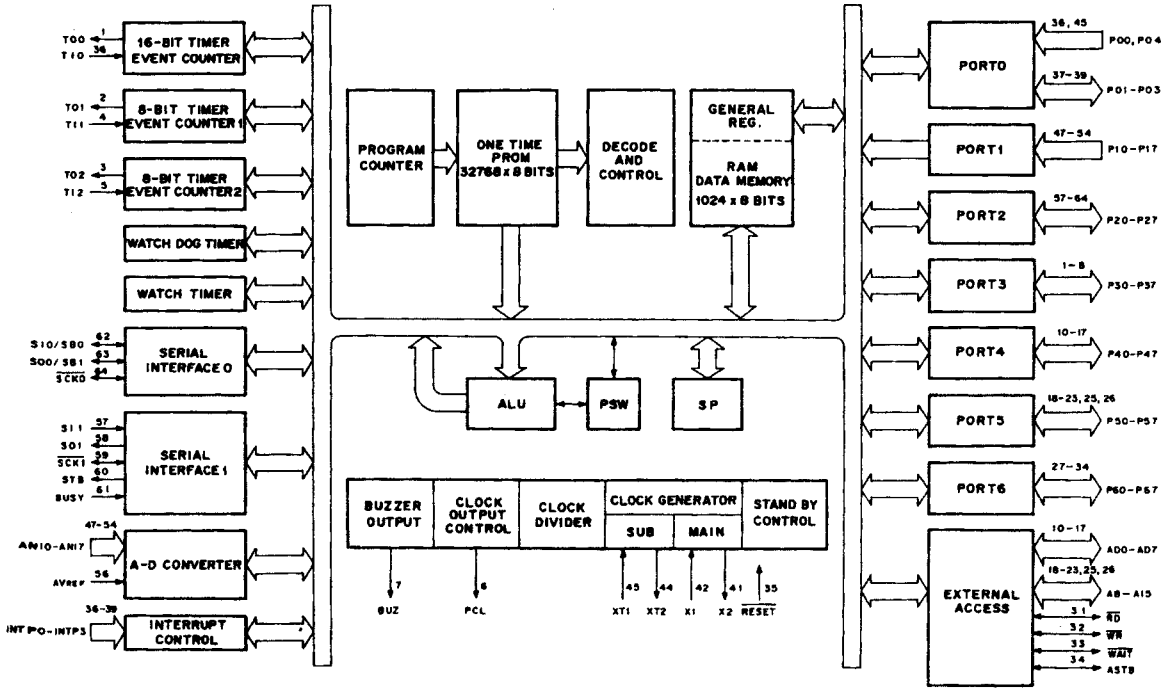

Section 5
Spare Parts

5-1. 補修部品注意事項

1. 安全重要部品
⚠印のついた部品は安全性を維持するために重要な部品です。したがって、交換する時は必ず指定の部品を使ってください。

2. 部品の共通化
ソニーから供給する補修用部品は、セットに使われているものと異なることがあります。
これは部品の共通化、改良等によるものです。
部品表には現時点での共通化された補修用部品が記載されています。

3. 部品の在庫
部品表のSP (Supply code) 欄に "o" で示される部品は在庫していないことがあり、納期が長くなることがあります。

4. 単位の表記
下記の単位については、表記を変更または省略しています。

単位		表記
静電容量	μF	uF
インダクタンス	μH	uH
抵抗値	Ω	省略
温度	℃	×××-DEG-C

5. 仕向区分の表記
部品表中、下記表示のある部品は、次に示すモデルで使用している部品です。

for J : 日本向けモデルに使用
for UC : USAおよびカナダ向けモデルに使用
for SY : 上記以外向けモデルに使用
for NTSC : DVW-250に使用
for PAL : DVW-250Pに使用

5-1. Notes on Repair Parts

1. Safety Related Components Warning
Components marked ⚠ are critical to safe operation. Therefore, specified parts should be used in the case of replacement.

2. Standardization of Parts
Some repair parts supplied by Sony differ from those used for the unit. These are because of parts commonality and improvement.
Parts list has the present standardized repair parts.

3. Stock of Parts
Parts marked with "o" at SP (Supply Code) column of the spare parts list may be not stocked. Therefore, the delivery date will be delayed.

4. Units Representation
The following represented units are changed or omitted in writing.

Units		Representation
Capacitance	μF	uF
Inductance	μH	uH
Resistance		Abbreviation
Temperature	°C	XXX-DEG-C

5. Destination Representation
The part indicated "for J/UC/SY" in the spare parts list is used in the unit written below.

for J : The part is used in a unit for Japan.
for UC : The part is used in a unit for U.S.A. and Canada.
for SY : The part is used in a unit for regions except the above countries.
for NTSC : The part is used in the NTSC model.
for PAL : The part is used in the PAL model.

5-2. Exploded Views

Index

Item	Title	Page
Upper plate Bottom plate Handle Cabinet (left) Battery lid	TOP AND BOTTOM PANELS	5-4
Rear cabinet Battery retainer Battery connector	BATTERY CASE	5-6
Front panel assembly Switch bottons Switch knobs	FRONT PANEL	5-8
Connectors Fuse CP-260 board CC-66 board	CONNECTOR PANEL	5-10
Display modules KY-315 board ADA-44 board SST-33 board	FRONT CHASSIS AND MOUNTED CIRCUIT BOARDS	5-12
VPR-12 board DPR-62 board DIF-31 board MB-601 board EQ-54 board Power block	REAR CHASSIS AND VIDEO BOARDS	5-14
Cassette compartment	CASSETTE COMPARTMENT	5-16
S-side reel table T-side reel table Slide link SE-233 board	S/T REEL TABLES	5-18
Drum assembly Brush Slip ring S-side reel motor S-side brake Drivig belt	DRUM AND S-SIDE REEL MOTOR	5-20
CTL head FE head Video head cleaner Tape guide (S3)	CTL HEAD AND VIDEO HEAD CLEANER	5-22
Tension regulator S-side drawing arm Tape guide (S4,S5)	TENSION REGULATOR AND S-SIDE DRAWING ARM	5-24
S-side rail S-side slider S-side catcher S-side threading gear Tape guide (S1,S2)	S-SIDE THREADING LINK	5-26

Item	Title	Page
T-side rail T-side slider T-side catcher T-side threading gear Tape guide (T1,T2)	T-SIDE THREADING LINK	5-28
CUE/TC head CUE brush Capstan motor	CUE/TC HEAD AND CAPSTAN MOTOR	5-30
T-side reel motor T-side brake Drivig belt Pinch pressing arm Pinch pressing plunger	T-SIDE REEL MOTOR AND PINCH PRESS BLOCK	5-32
Treading motor Gear block Manual eject gear	THREADING MOTOR AND GEAR TRAIN	5-34
Pinch roller arm T-side drawing arm CUE link DET-26 board Tape guide (T3)	CUE LINK AND PINCH ARM	5-36

TOP AND BOTTOM PANELS

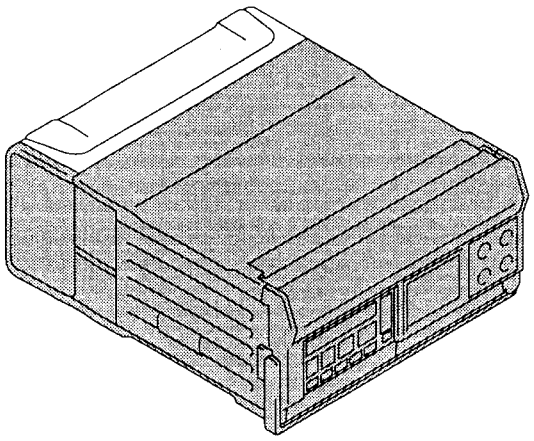

No.	Part No.	SP	Description
1	A-8269-457-A	o	CABINET (LEFT) ASSY
2	A-8278-239-A	o	ASSY,HANDLE
3	X-3664-208-0	s	KNOB ASSY, FADE
4	X-3678-394-2	o	PLATE SUB ASSY, UPPER
5	X-3678-398-1	o	COVER ASSY, FRONT (for J, UC)
	X-3678-413-1	o	COVER ASSY, FRONT (for SY)
6	X-3678-463-1	o	PLATE SUB ASSY, BOTTOM
7	3-169-331-01	o	BRACKET, CABINET (REAR)
8	3-169-346-01	s	ROLLER (A)
9	3-169-347-05	o	HOLDER (B), ROLLER
10	3-169-348-02	s	ROLLER (B)
11	3-169-349-11	o	COVER, ROLLER
12	3-169-350-02	s	SHAFT, BT ROLLER
13	3-169-351-05	o	HOLDER (A), ROLLER
14	3-169-406-21	o	COVER, L SUB
15	3-169-407-02	s	SCREW, LID
16	3-169-517-01	o	CUSHION (UPPER), ER
17	3-169-524-01	o	CUSHION (LOWER), ER
18	3-169-530-21	o	LID, BT
19	3-644-718-00	s	SPRING, COMPRESSION
20	3-669-596-01	s	WASHER (2.3), STOPPER
21	3-682-543-00	s	RETAINER, FLYWHEEL
22	3-691-399-01	s	KNOB, VR
23	3-691-506-01	o	PLATE,ORNAMENTAL
24	3-693-977-01	o	SHAFT, HANDLE
25	3-694-126-01	o	SHEET (S), VENTILATION
26	3-694-127-01	o	SHEET (L), VENTILATION
27	3-694-128-01	o	CUSHION (L)
28	3-694-129-01	o	CUSHION (S)
29	3-728-663-01	s	RING (P7), O
30	3-921-816-01	s	LABEL, NI-CD RECYCLE

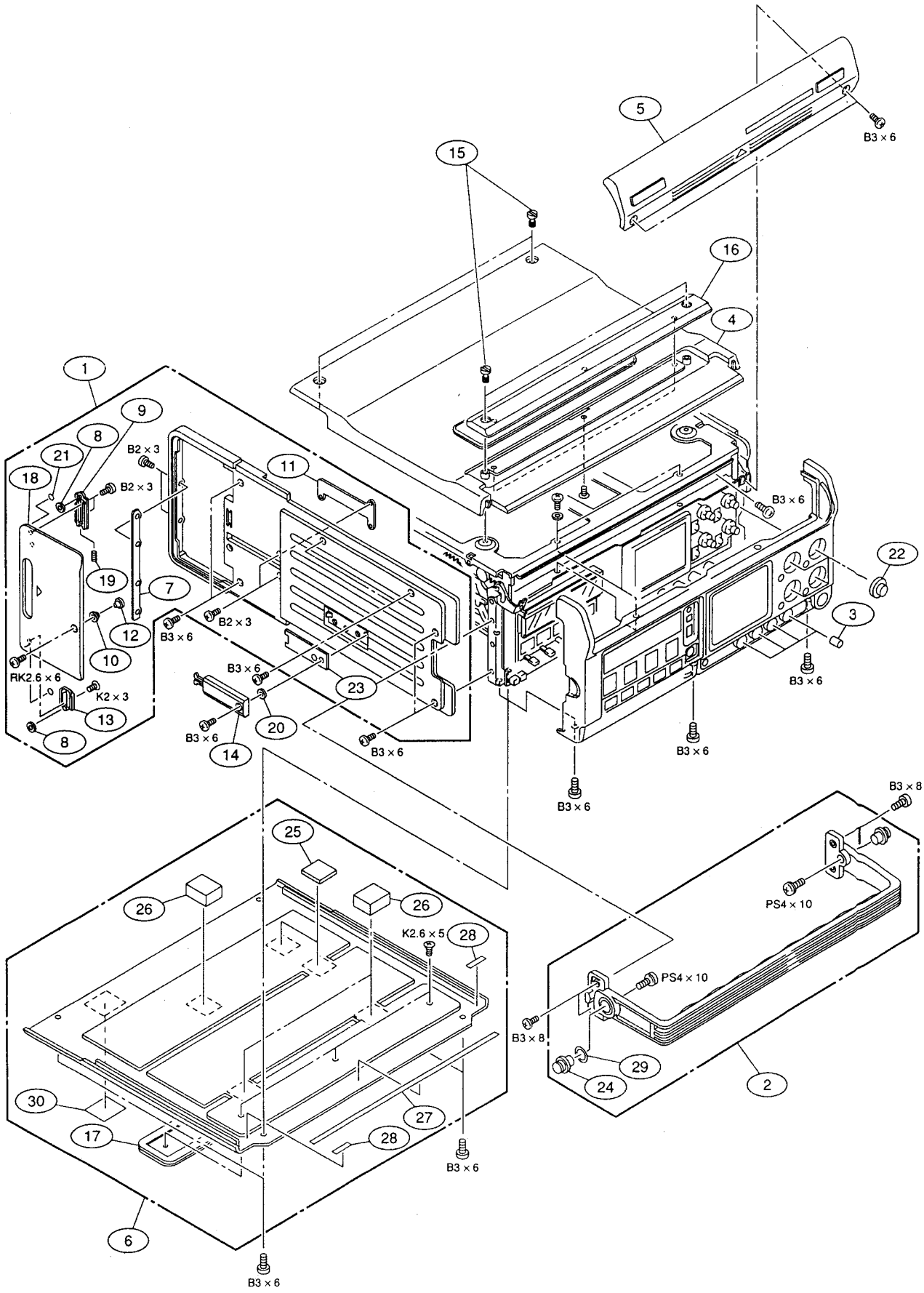
5
B3 × 6
15
16
4
1
9
8
21
18
B2 × 3
B2 × 3
11
19
7
12
10
RK2.6 × 6
K2 × 3
13
8
B2 × 3
B3 × 6
B3 × 6
23
20
B3 × 6
14
B3 × 6
B3 × 6
B3 × 6
22
3
B3 × 6
B3 × 8
PS4 × 10
PS4 × 10
B3 × 8
29
24
2
25
26
26
K2.6 × 5
28
30
17
27
28
B3 × 6
6
B3 × 6

BATTERY CASE

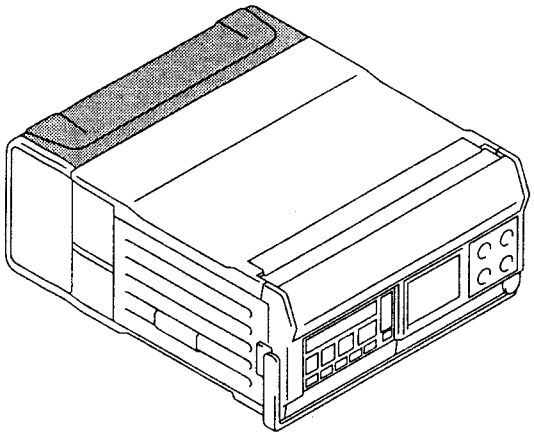

No.	Part No.	SP	Description
101	A-8269-458-A	o	CABINET (REAR) ASSY
102	A-8278-224-D	o	PARTITION ASSY
103	A-8278-225-G	o	PARTITION ASSY,CASE
104	X-3678-499-1	s	ASSY,ARM,LOCK
105	1-955-096-12	o	HARNESS, BATT-CON
106	3-169-347-05	o	HOLDER (B), ROLLER
107	3-169-424-01	s	SPRING, COMPRESSION
108	3-169-543-01	o	BRACKET (A), BT
109	3-169-569-01	o	CUSHION (B)
110	3-169-570-01	o	CUSHION (A)
111	3-308-704-00	s	SPRING, TENSION
112	3-328-345-01	s	SPRING, TENSION
113	3-691-393-01	o	BRACKET,CASE
114	3-691-394-01	o	BRACKET,CONNECTOR
115	3-691-518-01	o	PUSH BUTTON
116	3-691-526-01	o	ROLLER
117	3-691-534-02	o	SPRING(2),RETURN,ARM
118	3-691-535-01	o	SPRING(4),RETURN,ARM
119	3-691-595-02	o	RETAINER, BATTERY
120	3-703-357-06	1	PIN, PARALLEL (DIA. 1.6X14)
121	4-606-856-01	s	SPRING, TENSION

BATTERY CASE

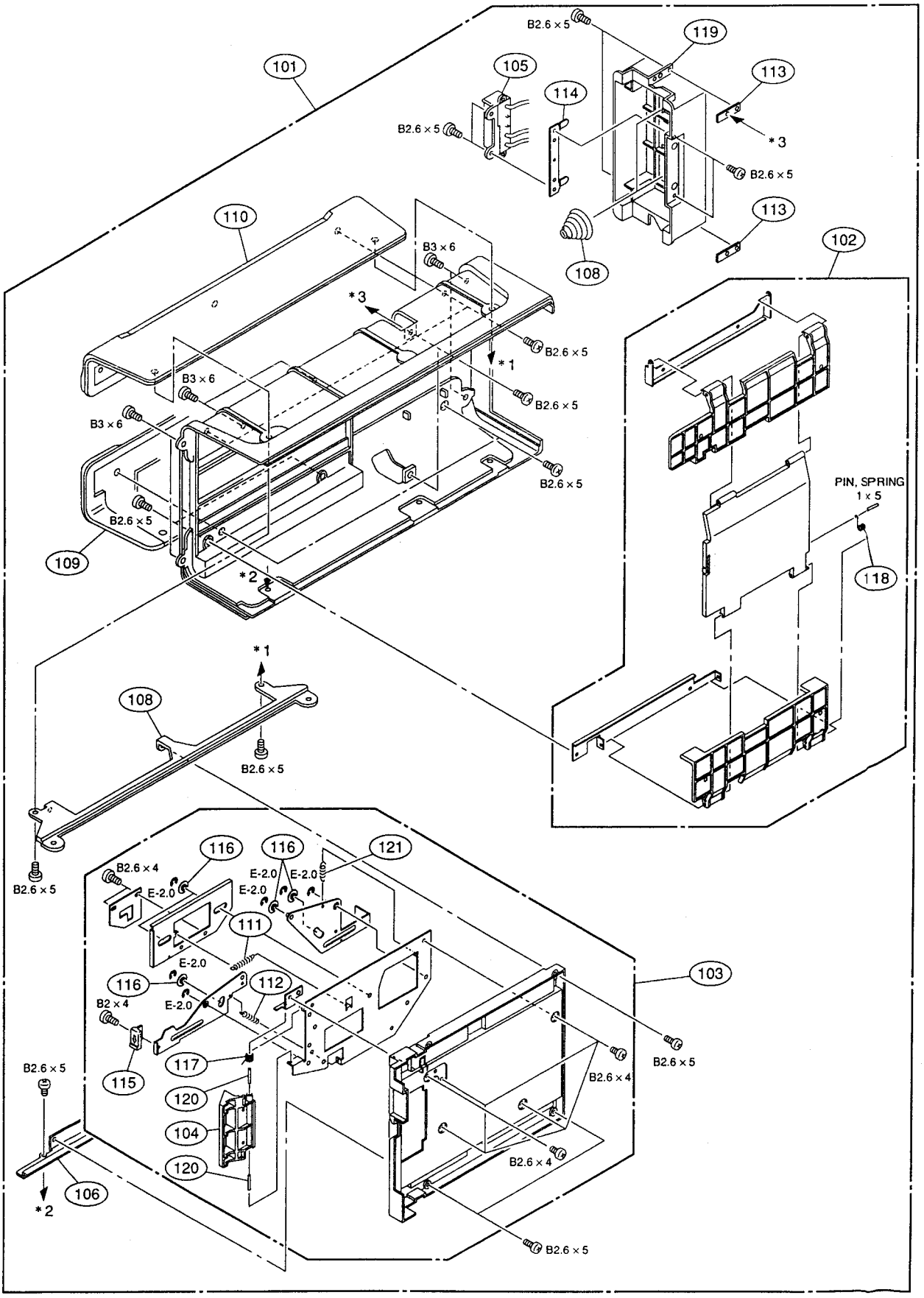

FRONT PANEL

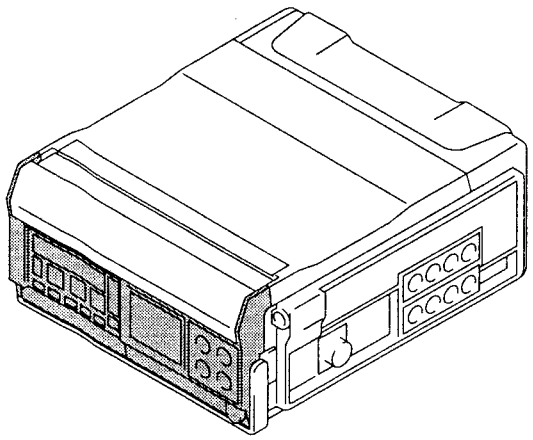

No.	Part No.	SP	Description
201	X-3165-755-1	o	RETAINER ASSY, TOGGLE
202	X-3165-862-1	s	KNOB ASSY (3P)
203	X-3165-863-1	s	KNOB ASSY (2P)
204	X-3166-129-1	o	BUTTON ASSY (STOP)
205	X-3166-130-1	o	BUTTON ASSY (PLAY)
206	X-3166-131-1	o	BUTTON ASSY (REC)
207	X-3166-132-1	o	BUTTON ASSY (REW)
208	X-3166-133-1	o	BUTTON ASSY (F FWD)
209	X-3166-134-1	o	BUTTON ASSY (SEARCH)
210	X-3166-136-1	o	BUTTON ASSY (PAUSE)
211	X-3166-137-1	o	BUTTON ASSY (EJECT)
212	X-3678-392-1	o	KNOB ASSY,SELECTION
213	X-3678-395-1	o	COVER ASSY, TC
214	X-3678-396-1	o	BUTTON ASSY (CUE DUB)
215	X-3678-397-2	o	PANEL(N) SUB ASSY, FRONT (for J, UC)
	X-3678-418-2	o	PANEL(P) SUB ASSY, FRONT (for SY)
216	X-3719-113-1	s	KNOB ASSY
217	3-169-388-01	o	SHAFT, TC COVER
218	3-169-389-01	o	CUSHION, KEY
219	3-169-390-01	s	BUTTON, RESET
220	3-170-161-01	s	KNOB, SW
221	3-173-283-02	o	PLATE, GROUND, FP
222	3-184-994-01	o	ISR STICKER(S)
223	3-571-850-00	s	SPRING, COMPRESSION
224	3-676-244-11	s	COVER, SW
225	3-686-085-01	o	PIN, PUSH BUTTON
226	3-686-086-01	o	CUSHION, BUTTON
227	3-691-507-01	o	BUTTON,MENU
228	3-701-437-21	s	WASHER
229	3-729-007-01	o	PLATE, ORNAMENTAL, TOGGLE SW

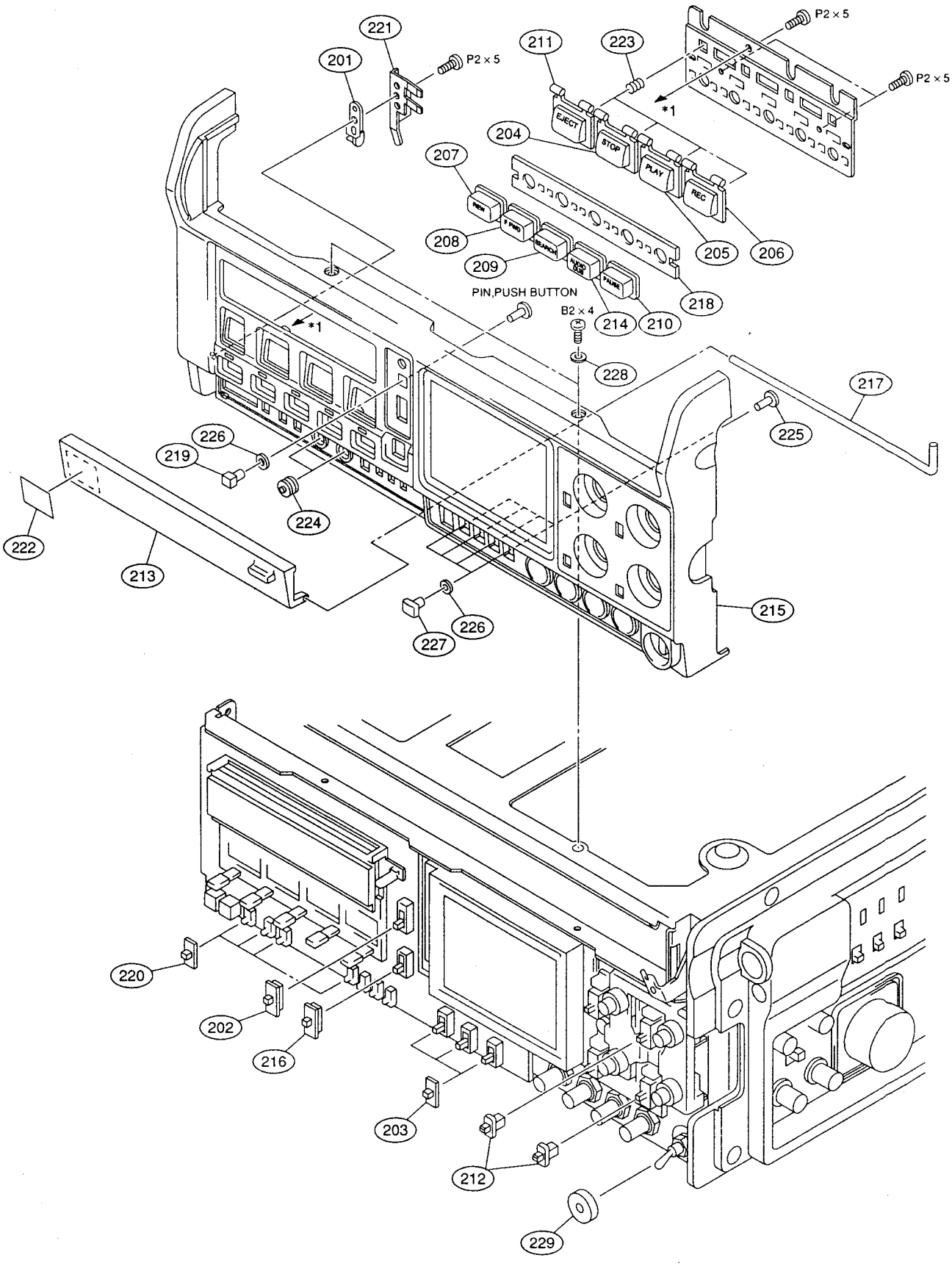
P2 × 5
P2 × 5
P2 × 5
221
201
211
223
204
207
208
209
205
206
218
214
210
228
217
225
226
219
224
222
213
227
226
215
220
202
216
203
212
229
*1
*1
PIN,PUSH BUTTON
B2 × 4
EJECT
STOP
PLAY
REC
REW
F FWD
SEARCH
STILL
PAUSE

CONNECTOR PANEL

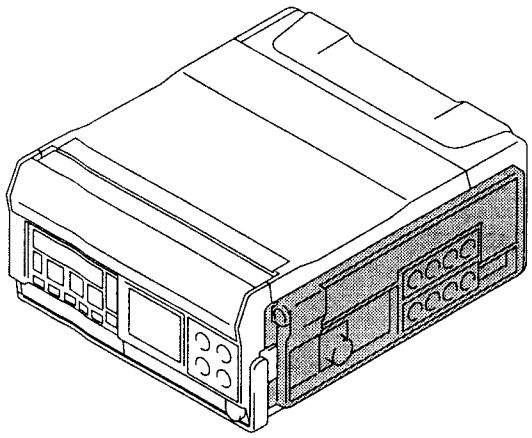

No.	Part No.	SP	Description
301	A-8272-756-A	o	MOUNTED CIRCUIT BOARD, CON-18
302	A-8272-757-A	o	MOUNTED CIRCUIT BOARD, DUS-339
303	A-8276-932-A	o	MOUNTED CIRCUIT BOARD, CC-66
304	A-8276-936-A	o	MOUNTED CIRCUIT BOARD, CP-260J (for J)
	A-8276-934-A	o	MOUNTED CIRCUIT BOARD, CP-260 (for UC, SY)
305	A-8276-938-A	o	MOUNTED CIRCUIT BOARD, FU-63
306	X-3166-331-1	s	KNOB ASSY (2 POSI)
307	X-3166-332-1	s	KNOB ASSY (3 POSI)
308	X-3682-814-0	s	KNOB ASSY, CONTROL
309	1-241-521-11	s	RES, VAR, CARBON 5K
310	1-241-577-11	s	RES, VAR, CARBON 20K/20K
311	1-507-743-21	s	JACK, STEREO MINIATURE
312	1-507-863-51	s	JACK, LARGE TYPE
313	⚠ 1-532-525-31	s	BREAKER, CIRCUIT
314	⚠ 1-532-749-11	s	FUSE, GLASS TUBE
315	1-533-189-11	s	HOLDER, FUSE
316	1-561-336-00	s	CONNECTOR, COAXIAL
317	1-562-245-11	o	RECEPTACLE,CONNECTOR 26P
318	1-565-072-11	s	CONNECTOR, ROUND TYPE (RF) 4P
319	1-566-616-11	s	CONNECTOR, XLR (F) (4 GANG) 3P
320	1-566-617-11	s	CONNECTOR, XLR (M) (4 GANG) 3P
321	1-657-814-11	o	PRINTED CIRCUIT BOARD, VR-205
322	1-658-773-11	o	PRINTED CIRCUIT BOARD, DC-85
323	1-774-157-11	s	CONVERTER, COAXIAL CONNECTOR
324	2-139-018-01	s	NUT (D SUB 9P), PLATE
325	3-169-382-02	o	BRACKET, HEADPHONE
326	3-169-383-01	o	BRACKET, PANEL
327	3-169-384-01	o	PLATE, SNAP
328	3-169-385-01	o	GUARD, VR
329	3-169-455-01	s	SLEEVE, INSULATING
330	3-673-910-31	s	SCREW, CONNECTOR
331	3-691-557-01	o	SHEET(L)J,CONNECTOR PANEL (for J)
	3-691-560-01	o	SHEET(L)UC,CONNECTOR PANEL (for UC, SY)
332	3-691-558-02	o	SHEET(S),CONNECTOR PANEL
333	3-691-561-02	o	PANEL,CONNECTOR
334	8-729-034-88		TRANSISTOR 2SK2205

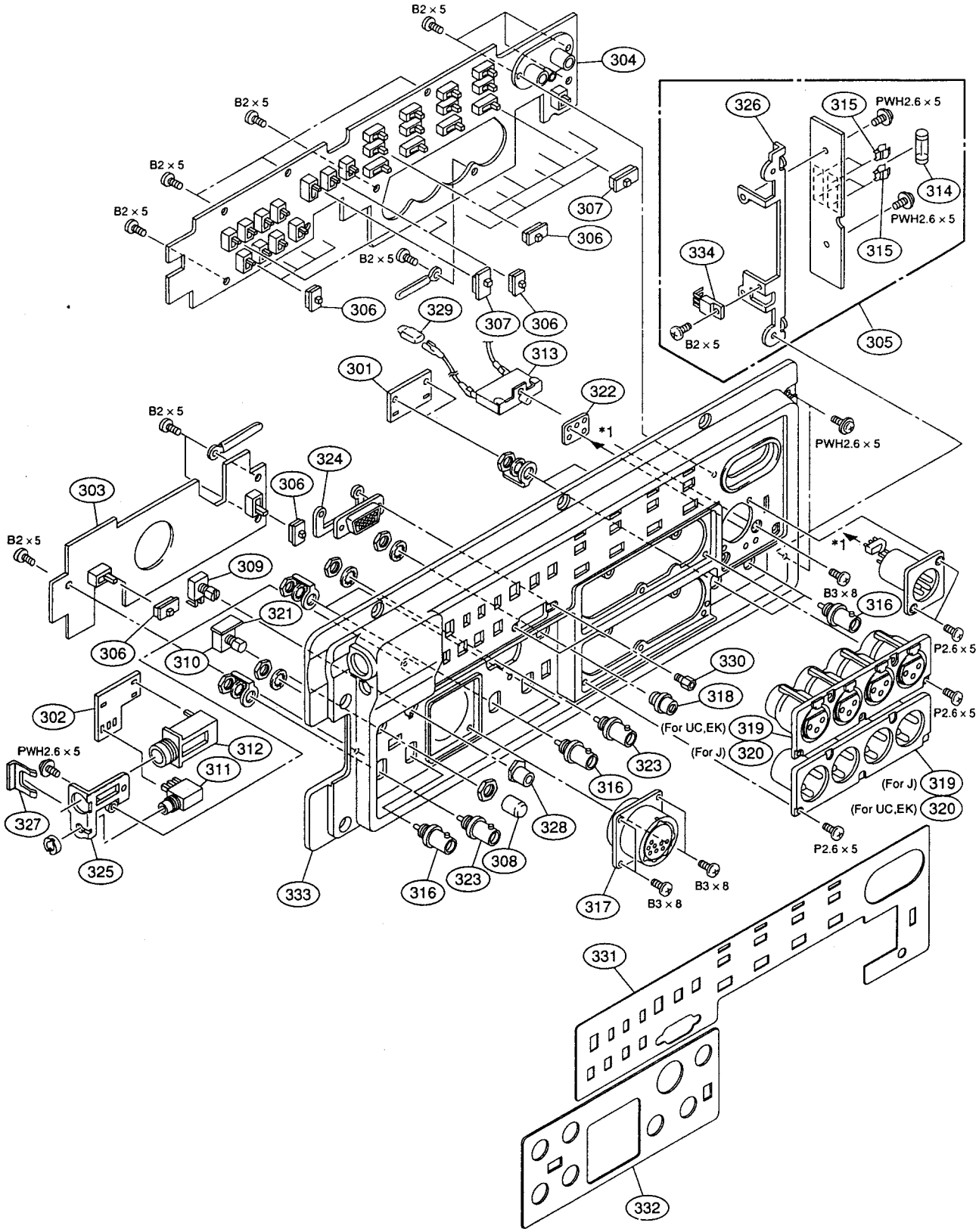
B2 × 5
304
B2 × 5
B2 × 5
B2 × 5
307
306
B2 × 5
306
329
307
306
313
301
322
*1
326
315
PWH2.6 × 5
314
PWH2.6 × 5
315
334
B2 × 5
305
PWH2.6 × 5
B2 × 5
324
306
303
B2 × 5
309
321
306
310
302
PWH2.6 × 5
312
311
327
325
333
316
323
308
328
316
323
317
B3 × 8
B3 × 8
*1
B3 × 8
316
P2.6 × 5
330
318
P2.6 × 5
(For UC,EK) 319
(For J) 320
(For J) 319
(For UC,EK) 320
P2.6 × 5
331
332

FRONT CHASSIS AND MOUNTED CIRCUIT BOARDS

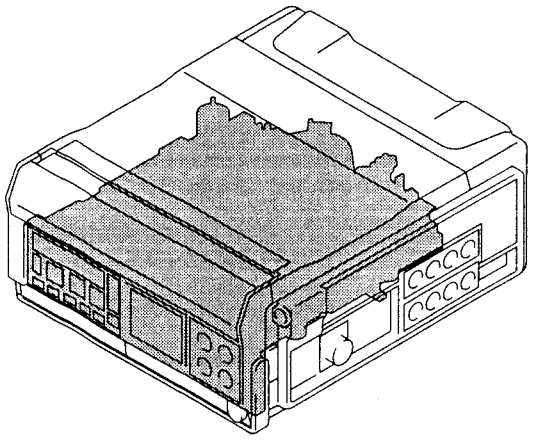

No.	Part No.	SP	Description
401	A-8276-910-A	o	MOUNTED CIRCUIT BOARD, SST-3 (for J, UC)
	A-8276-912-A	o	MOUNTED CIRCUIT BOARD, SST-3P (for SY)
402	A-8276-930-A	o	MOUNTED CIRCUIT BOARD, ADA-44
403	A-8276-948-A	o	MOUNTED CIRCUIT BOARD, KY-315 (for J, UC)
	A-8276-950-A	o	MOUNTED CIRCUIT BOARD, KY-315P (for, SY)
404	X-3678-391-4	o	CHASSIS,FRONT ASSY
405	1-657-808-11	o	PRINTED CIRCUIT BOARD, VR-194
406	1-657-809-11	o	PRINTED CIRCUIT BOARD, VR-206
407	1-801-022-11	s	DISPLAY MODULE, LIQUID CRYSTEL
408	1-809-345-11	s	DISPLAY PANEL, LIQUID CRYSTAL
409	3-169-546-02	o	HOLDER, LCD
410	3-545-567-00	o	TIRE, FF
411	3-691-395-03	o	PLATE,FIXED BOARD
412	3-691-398-01	o	PLATE,BRACKET VOLUME
413	3-691-580-02	o	INSULATOR, SST
414	3-695-882-01	o	PLATE, SHIELD
415	3-695-883-02	o	TAPE(M), PROTECTOR
416	3-695-884-02	o	TAPE(L), PROTECTOR
417	3-695-885-02	o	TAPE(R), PROTECTOR
418	4-950-558-02	o	SCREW (S)

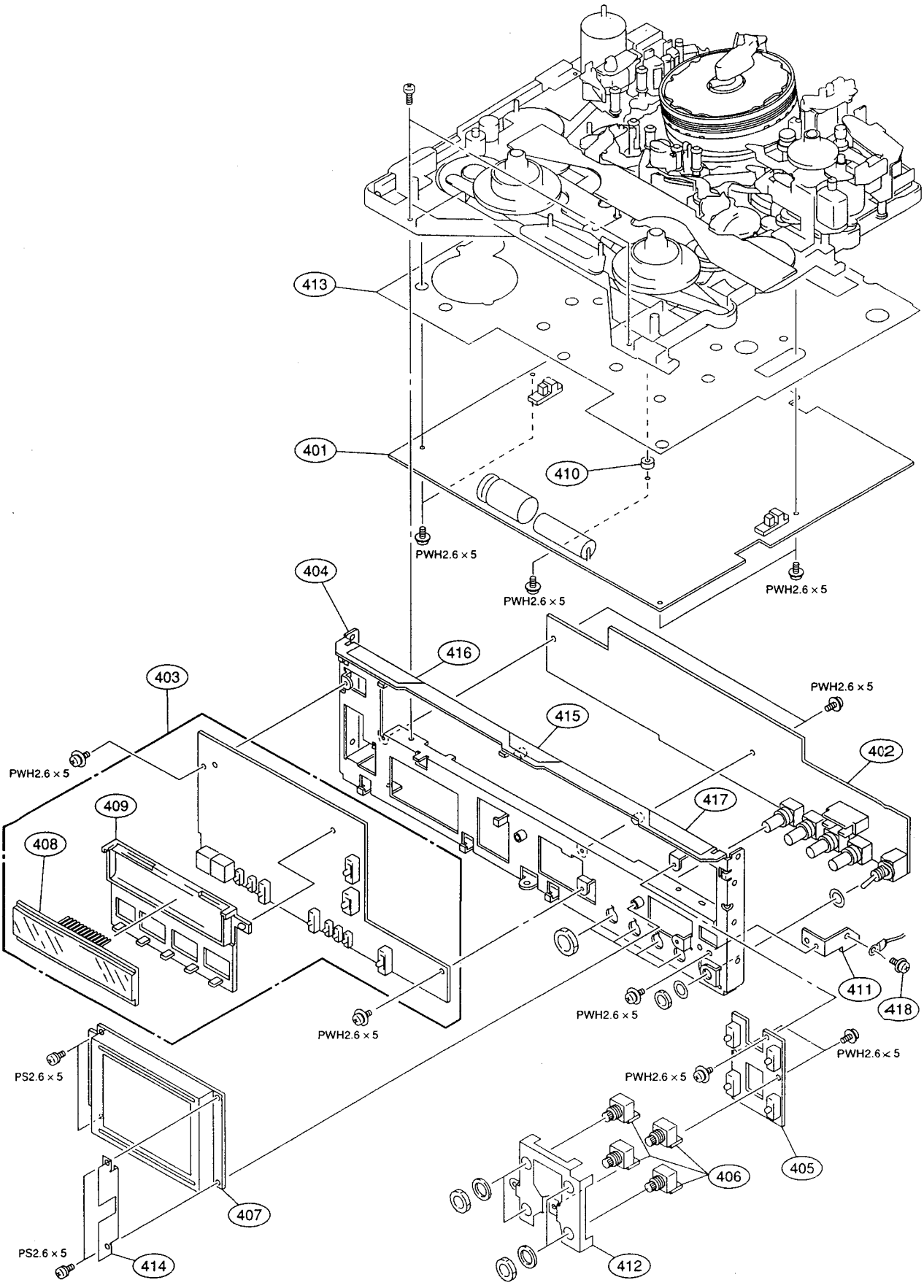
413
401
410
PWH2.6 × 5
PWH2.6 × 5
PWH2.6 × 5
404
416
403
PWH2.6 × 5
415
PWH2.6 × 5
402
PWH2.6 × 5
409
417
408
411
418
PWH2.6 × 5
PWH2.6 × 5
PS2.6 × 5
PWH2.6 × 5
405
406
407
PS2.6 × 5
414
412

REAR CHASSIS AND VIDEO BOARDS

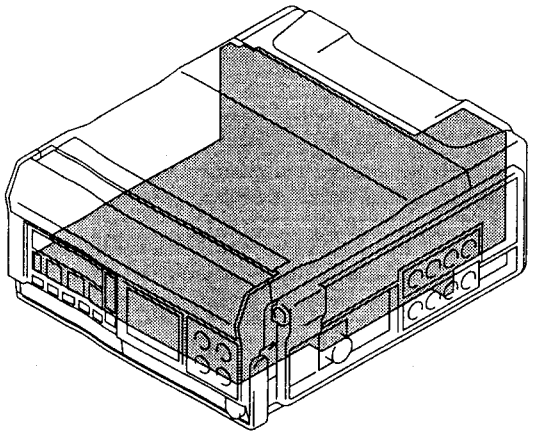

No.	Part No.	SP	Description
501	A-8269-442-A	s	POWER ASSY (for J)
	A-8269-463-A	s	POWER ASSY (for UC, SY)
502	A-8276-909-A	o	MOUNTED CIRCUIT BOARD, MB-601
503	A-8276-914-A	o	MOUNTED CIRCUIT BOARD, VPR-12 (for J, UC)
	A-8276-942-A	o	MOUNTED CIRCUIT BOARD, VPR-12P (for SY)
504	A-8276-922-A	o	MOUNTED CIRCUIT BOARD, EQ-54
505	A-8276-928-A	o	MOUNTED CIRCUIT BOARD, DIF-31
506	A-8276-944-A	o	MOUNTED CIRCUIT BOARD, DPR-62 (for J, UC)
	A-8276-946-A	o	MOUNTED CIRCUIT BOARD, DPR-62P (for SY)
507	1-507-905-11	s	JACK, DC
508	1-658-297-11	o	PRINTED CIRCUIT BOARD, APR-20
509	2-377-709-00	o	BUSHING, RUBBER
510	3-682-057-11	s	SPACER (SMALL)
511	3-691-388-01	o	CHASSIS,REAR
512	3-691-389-03	o	HOLDER,R
513	3-691-390-02	o	SHIELD PLATE, VIDEO
514	3-691-391-04	o	HOLDER,L
515	3-691-396-01	o	SUPPORT,CHASSIS
516	3-691-503-02	o	CASE,SHIELD LA
517	3-691-515-02	o	RETAINER,STAY
518	3-691-950-01	o	SPACER, P.C.B
519	3-693-971-01	o	PLATE, BLIND
520	4-950-558-02	o	SCREW (S)

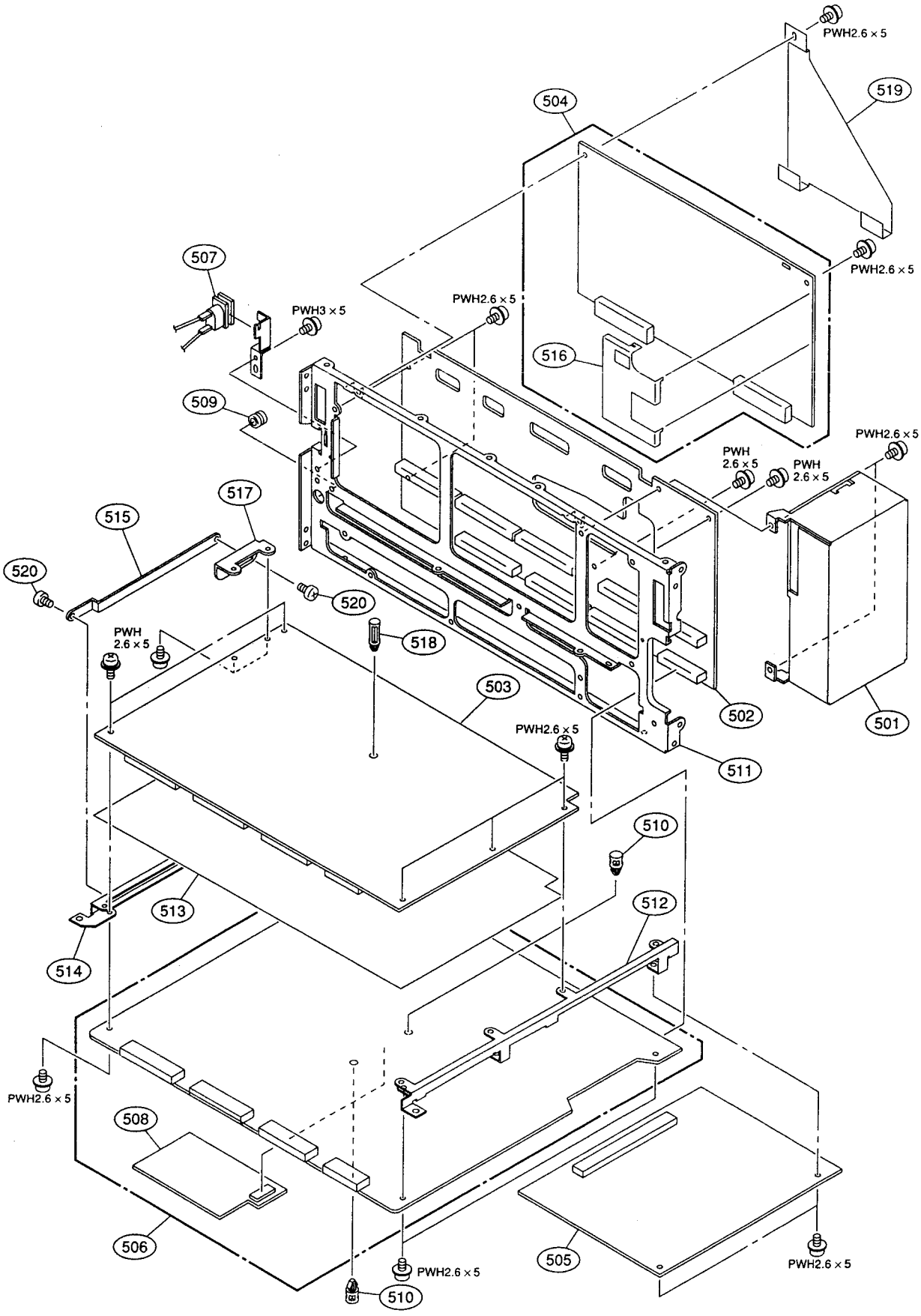
PWH2.6 × 5
519
504
507
PWH3 × 5
PWH2.6 × 5
PWH2.6 × 5
516
509
PWH2.6 × 5
PWH 2.6 × 5
PWH 2.6 × 5
517
515
520
520
PWH 2.6 × 5
518
503
PWH2.6 × 5
502
501
511
510
513
512
514
PWH2.6 × 5
508
506
PWH2.6 × 5
510
505
PWH2.6 × 5

CASSETTE COMPARTMENT

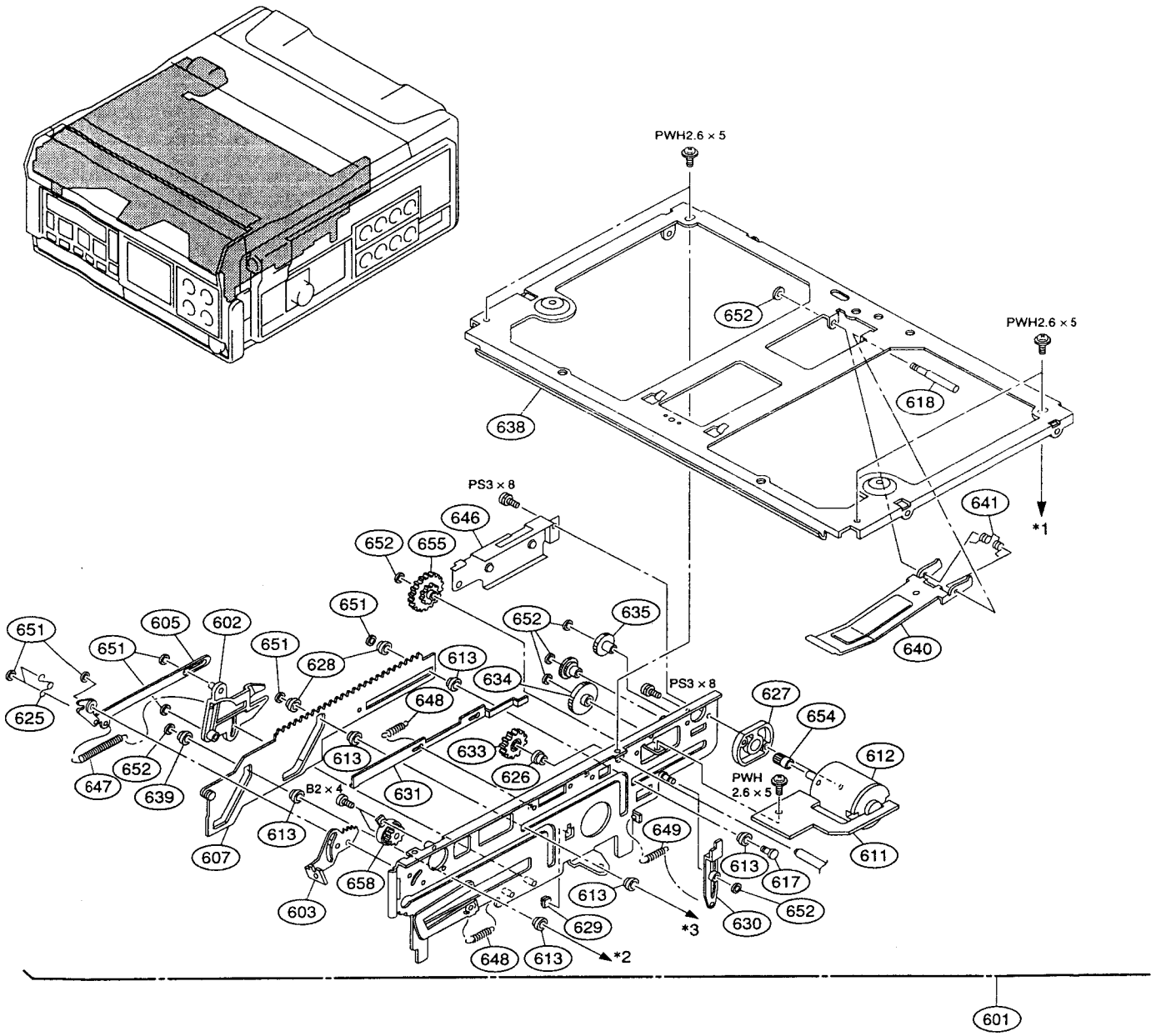

No.	Part No.	SP	Description
601	A-8269-732-A	s	CASSETTE COMPARTMENT ASSY
602	X-3165-739-1	o	CAM (L) ASSY
603	X-3165-740-1	o	ARM (L) ASSY, FF
604	X-3165-741-1	o	ARM (R) ASSY, FF
605	X-3165-742-1	o	ARM (L) ASSY, SWITCHING
606	X-3165-746-3	o	ARM ASSY, RACK DRIVING
607	X-3165-747-2	o	RACK (L) ASSY, C
608	X-3165-748-2	o	RACK (R) ASSY, C
609	X-3165-770-2	o	LEVER (R) ASSY, PUSH-OUT
610	1-638-701-12	o	PRINTED CIRCUIT BOARD, CS-25
611	1-638-702-11	o	PRINTED CIRCUIT BOARD, CS-26
612	1-698-335-11	s	MOTOR, DC (SVD-1489)
613	3-169-352-02	o	ROLLER (A), C
614	3-169-441-01	o	RETAINER (S), CASSETTE
615	3-169-444-01	o	SPRING (R), DETECTION
616	3-169-445-01	o	SPRING (L), DETECTION
617	3-169-456-01	o	SHAFT (R), ROLLER
618	3-169-457-01	o	SHAFT, ARM, LOCK
619	3-169-458-02	o	ARM, JOINT
620	3-169-460-01	o	ARM, L DETECTION
621	3-169-463-03	o	ARM (L), PUSH-OUT
622	3-169-464-03	o	ARM (R), PUSH-OUT
623	3-169-466-03	o	GUIDE (R), CASSETTE
624	3-169-467-01	o	GUIDE (L), CASSETTE
625	3-169-468-02	o	SPRING (A), TOGGLE
626	3-169-469-01	o	BEARING
627	3-169-470-02	o	WASHER, C MOTOR
628	3-169-471-01	s	ROLLER (B), C
629	3-169-472-01	o	CAM, PUSH-OUT
630	3-169-473-01	o	SHUTTER, C DOWN

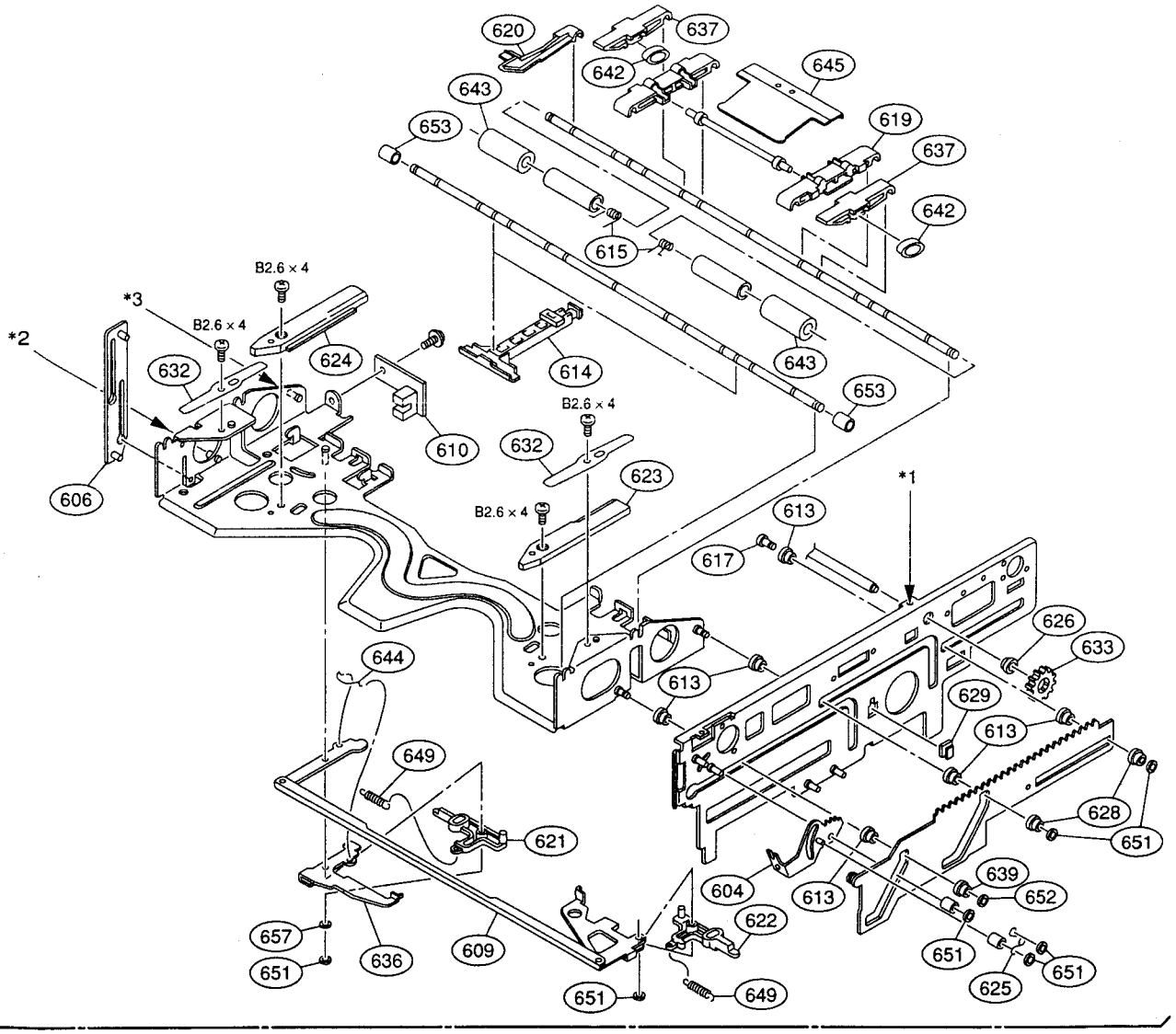

No.	Part No.	SP	Description
631	3-169-474-02	o	SHUTTER, C UP
632	3-169-475-02	o	SPRING, CASSETTE RETAINER
633	3-169-477-02	s	GEAR (5), C
634	3-169-479-03	s	GEAR (3), C
635	3-169-480-03	s	GEAR (2), C
636	3-169-482-02	o	LEVER (L), PUSH-OUT
637	3-169-499-03	o	LEVER, CORRECTION DETECTION
638	3-169-557-11	o	STAY, C
639	3-170-821-01	s	ROLLER (C), C
640	3-170-822-01	o	ARM, C LOCK
641	3-170-823-02	s	SPRING, LOCK ARM
642	3-172-394-01	o	SPACER, RUBBER
643	3-172-873-01	s	ROLLER, CASSETTE RETAINER
644	3-172-874-02	s	SPRING, C IN SHUTTER
645	3-172-876-02	o	SPRING (A), C STOPPER

No.	Part No.	SP	Description
646	3-178-212-02	s	SUPPORT, SHAFT, C GEAR
647	3-556-464-00	s	SPRING, TENSION
648	3-578-388-00	s	SPRING, TENSION
649	3-515-167-00	s	SPRING, TENSION
650	3-657-841-01	s	SPACER (2X2)
651	3-669-465-01	s	WASHER (1.5), STOPPER
652	3-676-387-00	s	POLY-SLIDER (DIA.1.6)
653	3-691-575-01	o	PETAINER,L CASSETTE
654	3-694-266-01	s	GEAR,C PINION
655	3-694-286-01	s	GEAR,C4
656	3-695-848-01	s	GEAR,C1
657	3-701-437-01	s	WASHER
658	3-712-786-11	s	DAMPER, OIL

S/T REEL TABLES

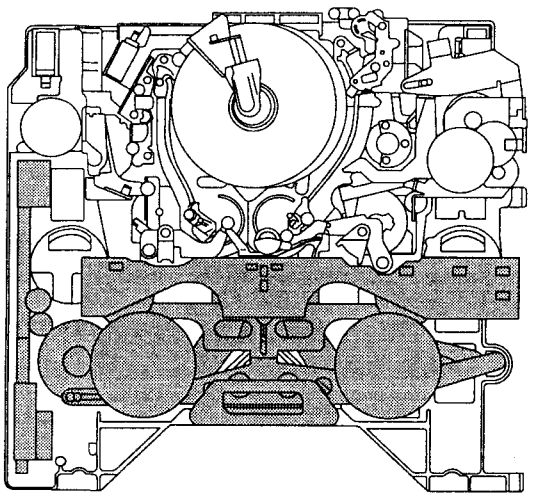

No.	Part No.	SP	Description
701	A-6739-095-A	s	TABLE ASSY, REEL
702	X-3165-760-1	o	ARM ASSY, REEL
703	X-3165-761-1	o	BASE ASSY, C SUPPORT
704	X-3165-763-1	s	GEAR ASSY, OSCILLATION
705	X-3165-775-2	o	LINK ASSY, SLIDE
706	1-657-800-11	o	PRINTED CIRCUIT BOARD, SE-233
707	3-169-500-01	s	GEAR, IDLE
708	3-169-501-02	o	PLATE, LIMITER
709	3-169-504-01	s	GEAR, RELAY
710	3-169-509-01	s	RAIL, GUIDE
711	3-169-511-01	o	RACK, DRIVING
712	3-169-512-01	o	RETAINER, REEL ARM
713	3-171-987-01	s	ROLLER (G)
714	3-172-123-01	s	RAIL (F), GUIDE
715	3-549-014-00	s	SPRING, TENSION
716	3-676-387-00	s	POLY-SLIDER (DIA.1.6)
717	3-701-437-11	s	WASHER
718	3-701-437-21	s	WASHER
719	3-701-439-11	s	WASHER
720	3-703-074-01	s	CAP 3, SHAFT

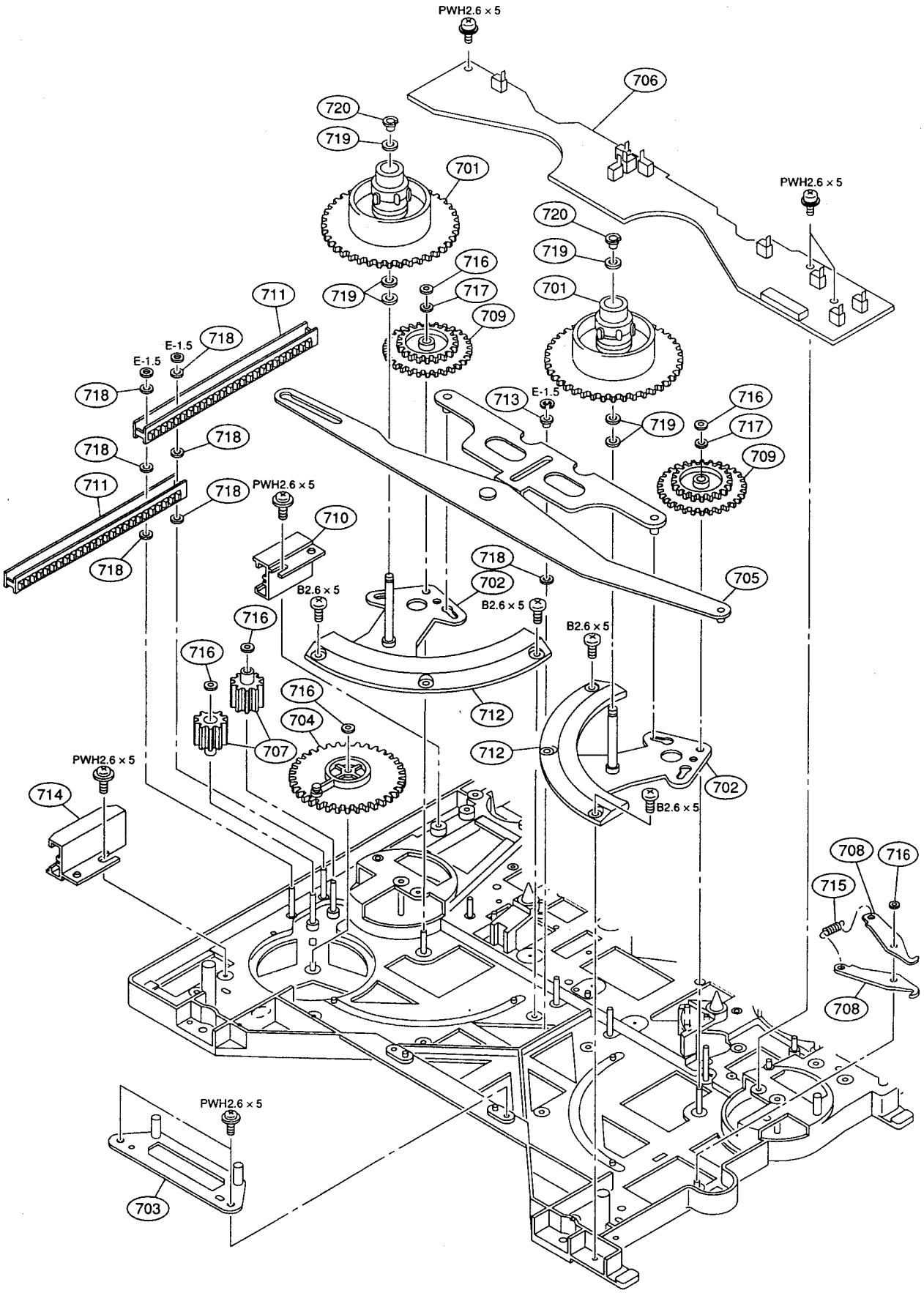
PWH2.6 × 5
706
720
719
701
716
717
709
711
E-1.5
718
713
705
710
B2.6 × 5
702
712
704
707
714
708
715
703

DRUM AND S-SIDE REEL MOTOR

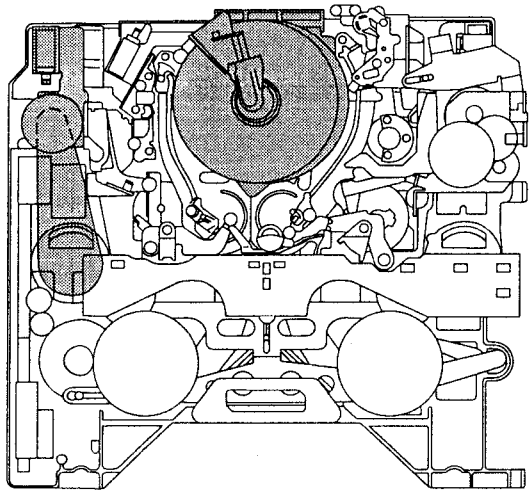

No.	Part No.	SP	Description
801	A-8263-460-A	s	BRUSH ASSY
802	A-8269-262-A	s	DRUM ASSY, DJH-11A-R (for NTSC)
	A-8269-264-A	s	DRUM ASSY, DJH-12A-R (for PAL)
803	A-8269-263-A	s	UPPER DRUM, DJH-11-R (for NTSC)
	A-8269-261-A	s	UPPER DRUM, DJH-12-R (for PAL)
804	X-3165-731-2	s	ARM ASSY, BRAKE
805	1-251-207-11	s	RING ASSY, SLIP
806	1-454-334-61	s	SOLENOID, PLUNGER
807	2-640-315-01	o	SCREW (M2X5), SMALL, +P, SW
808	3-169-370-03	o	PULLEY, MOTOR
809	3-169-503-03	s	PULLEY (B), RELAY
810	3-172-003-01	s	BELT, DRIVING
811	3-173-411-01	s	SPRING, BRAKE PLATE
812	3-185-531-01	s	BOLT M2X3, W HEXAGON
813	3-185-532-01	o	COVER, BRUSH
814	3-307-374-00	s	SPRING, TENSION
815	3-642-482-00	s	SPRING, TENSION
816	3-676-387-00	s	POLY-SLIDER (DIA.1.6)
817	3-701-437-21	s	WASHER
818	8-835-441-01	s	MOTOR R432276751A

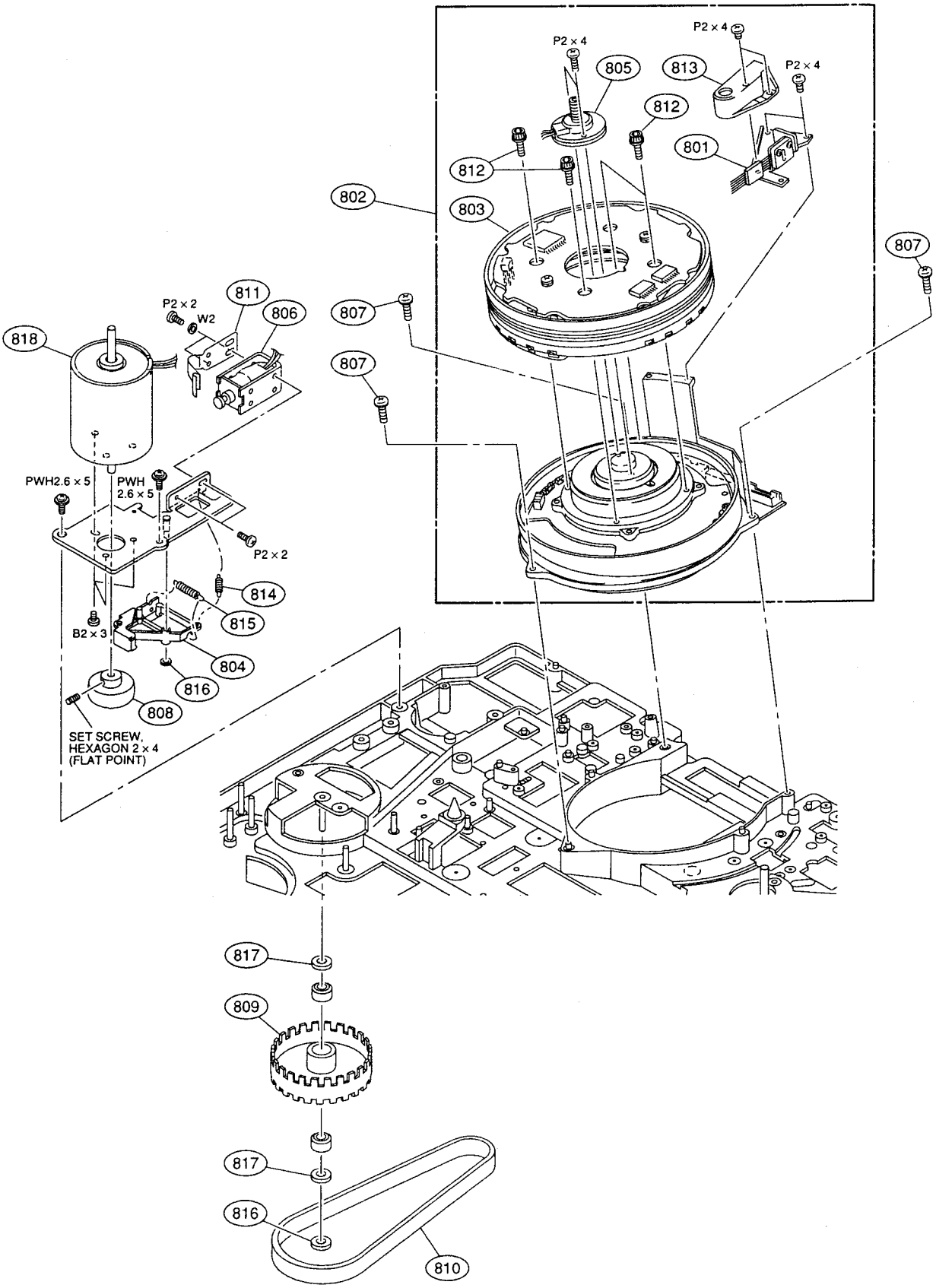
P2 × 4
P2 × 4
P2 × 4
805
813
812
812
801
802
803
807
807
807
811
P2 × 2
W2
806
818
PWH2.6 × 5
PWH
2.6 × 5
P2 × 2
814
815
B2 × 3
804
816
808
SET SCREW,
HEXAGON 2 × 4
(FLAT POINT)
817
809
817
816
810

CTL HEAD AND VIDEO HEAD CLEANER

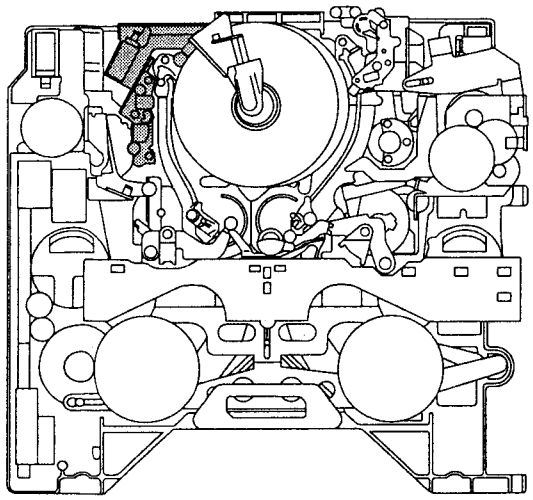

No.	Part No.	SP	Description
901	A-8278-220-B	o	CLEANER ASSY,VIDEO HEAD
902	X-3167-281-2	s	ROLLER ASSY, V CLEANING
903	X-3678-118-2	o	BASE ASSY,CTL FE
904	X-3678-129-2	s	ROLLER (2)ASSY,RESIN
905	X-3678-142-1	o	CLERNER ASSY, TAPE
906	1-454-607-21	s	SOLENOID, PLUNGER
907	2-640-315-01	o	SCREW (M2X5), SMALL, +P, SW
908	3-182-765-02	s	SPACER, CR
909	3-183-901-01	s	WASHER, CL
910	3-527-188-00	s	SPRING, TENSION
911	3-679-729-02	s	FLANGE,UPPER
912	3-680-043-01	s	SPRING,CTL
913	3-680-044-01	o	BRACKET,CTL
914	3-680-230-01	s	FLANGE,UNDER
915	3-691-552-01	o	LEVER,SOLENOID
916	3-691-555-01	o	SPRING,TORSION
917	3-691-562-01	o	SHOCK ABSORBER
918	3-698-829-01	s	NUT (M2)
919	3-726-829-01	l	WASHER, STOPPER
920	3-729-011-01	s	SPRING, COMPRESSION
921	8-825-770-73	s	HEAD, FE EF291-21
922	8-825-779-71	s	CTL HEAD (PS244-21D)

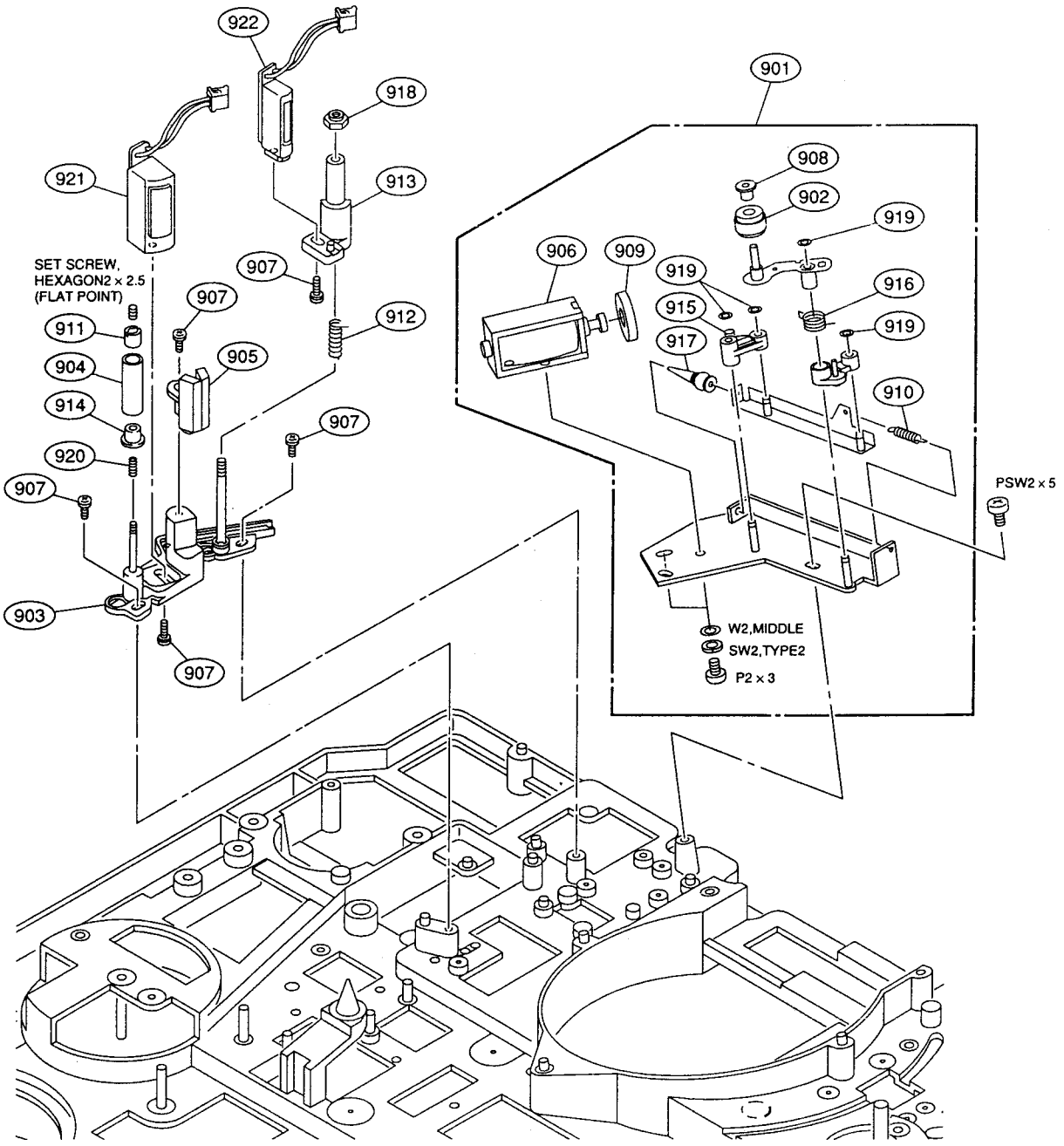
922
901
918
908
921
913
902
919
906
909
919
916
SET SCREW,
HEXAGON2 x 2.5
(FLAT POINT)
907
915
919
907
911
912
917
905
904
910
914
907
920
PSW2 x 5
907
903
W2,MIDDLE
SW2,TYPE2
P2 x 3
907

TENSION REGULATOR AND S-SIDE DRAWING ARM

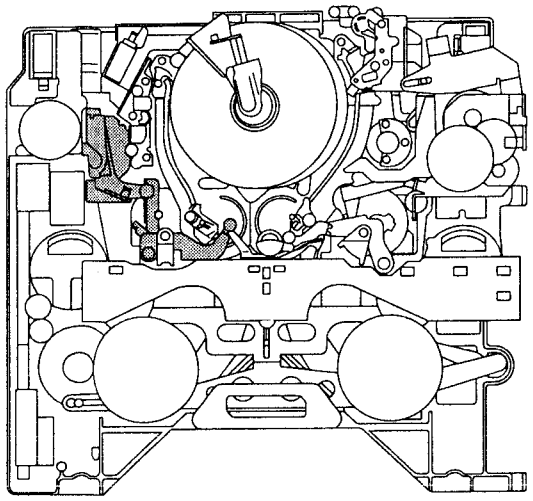

No.	Part No.	SP	Description
1001	A-6754-272-A	o	MOUNTED CIRCUIT BOARD, TR-57
1002	A-8269-451-A	s	TENSION REGULATOR ASSY
1003	A-8269-452-A	o	ARM ASSY, S
1004	X-3678-091-2	s	ROLLER ASSY
1005	X-3678-388-1	o	DRAWING ARM,ASSY
1006	X-3678-389-1	s	S-TEN ROLLER,ASSY
1007	X-3678-390-1	o	LAG,S-ARM,ASSY
1008	1-543-316-21	s	HEAD, SENSING (SMALL TYPE)
1009	2-279-715-01	s	RIVET, NYLON
1010	2-618-901-00	s	SPRING
1011	2-640-315-01	o	SCREW (M2X5), SMALL, +P, SW
1012	3-169-302-02	o	SPRING (TR), PLATE
1013	3-169-304-01	o	BASE, END SENSOR
1014	3-169-305-01	o	PLATE, YOKE
1015	3-169-336-01	o	GUARD, DME
1016	3-174-315-01	s	FLANGE (UPPER)
1017	3-174-316-02	s	FLANGE (LOWER)
1018	3-669-443-01	s	BEARING, BALL (NO FLANGE)
1019	3-669-465-01	s	WASHER (1.5), STOPPER
1020	3-669-595-00	s	WASHER (2), STOPPER
1021	3-680-828-01	o	MAGNET
1022	3-691-364-01	o	PLATE, TENTION ADJUSTMENT
1023	3-691-376-01	o	BASE,S-TEN
1024	3-691-378-01	s	ROLLER B
1025	3-691-380-01	s	ROLLER C
1026	3-691-381-01	s	SPRING,EXTENSION
1027	3-691-382-02	s	FLANGE,UPPER
1028	3-691-383-02	s	FLANGE,UNDER
1029	3-701-436-11	s	WASHER, 1.6 POLYETHYLENE
1030	3-701-436-21	s	WASHER, POLYEHTHYLENE
1031	3-701-437-01	s	WASHER
1032	3-701-437-11	s	WASHER
1033	3-726-829-01	l	WASHER, STOPPER
1034	3-729-011-01	s	SPRING, COMPRESSION
1035	8-745-001-07	s	DM-230-1

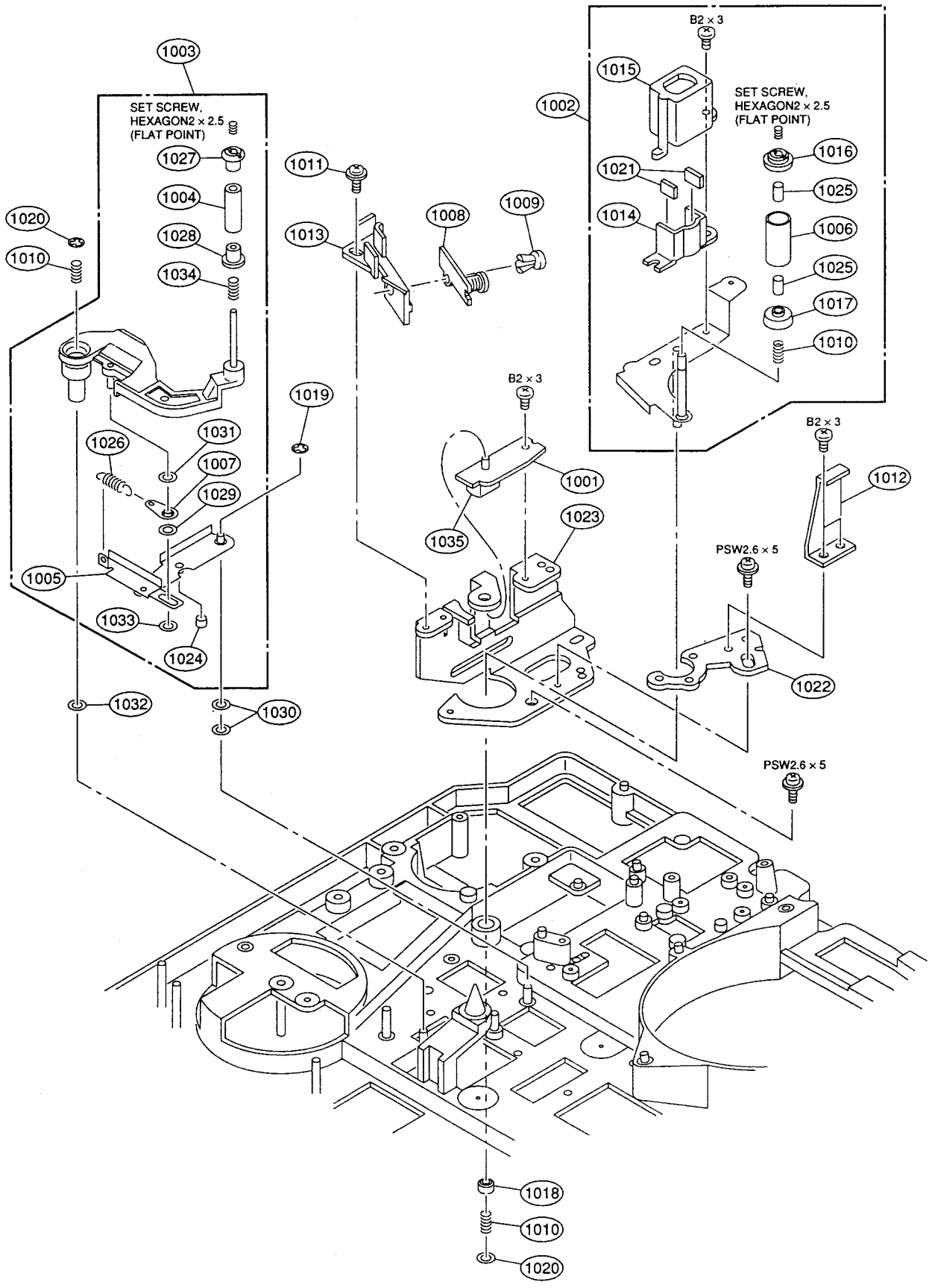
1003
SET SCREW,
HEXAGON2 x 2.5
(FLAT POINT)
1027
1004
1028
1034
1020
1010
1026
1031
1007
1029
1005
1033
1024
1032
1030
1019
1011
1013
1008
1009
B2 x 3
1015
1002
SET SCREW,
HEXAGON2 x 2.5
(FLAT POINT)
1016
1021
1025
1014
1006
1025
1017
1010
B2 x 3
1001
1035
1023
B2 x 3
1012
PSW2.6 x 5
1022
PSW2.6 x 5
1018
1010
1020

S-SIDE THREADING LINK

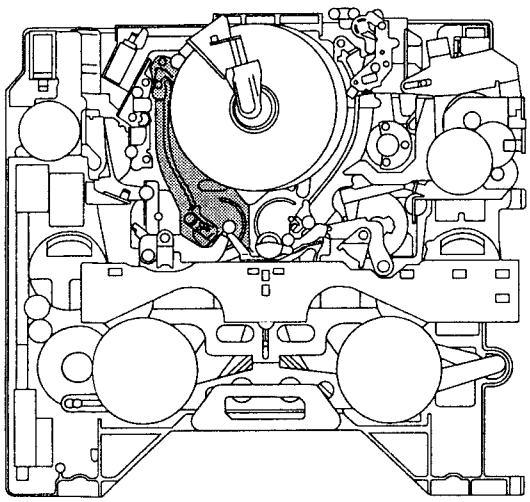

No.	Part No.	SP	Description
1101	A-8269-454-B	s	SLIDER ASSY, S
1102	A-8272-676-A	s	BLOCK ASSY, S DRAWER
1103	A-8278-032-C	o	CATCHER S ASSY
1104	X-3678-091-2	s	ROLLER ASSY
1105	X-3678-380-2	o	BASE,THREADING GEAR ASSY
1106	X-3678-464-1	o	GEAR ASSY,THREADING S
1107	3-679-729-02	s	FLANGE,UPPER
1108	3-679-777-04	o	GEAR,ARM,DRAWER
1109	3-680-230-01	s	FLANGE,UNDER
1110	3-691-360-02	o	RAIL,S
1111	3-691-577-01	s	GUIDE,SLANT
1112	3-691-880-01	o	LINK PROTECTOR
1113	3-716-167-01	s	SPRING, COMPRESSION
1114	3-726-829-01	l	WASHER, STOPPER
1115	3-727-809-01	s	BOLT (M1.4X5), HEXAGON SOCKET
1116	3-729-011-01	s	SPRING, COMPRESSION
1117	3-729-013-21	s	SCREW(M1.4X2.5),WASHERHEAD(+P)

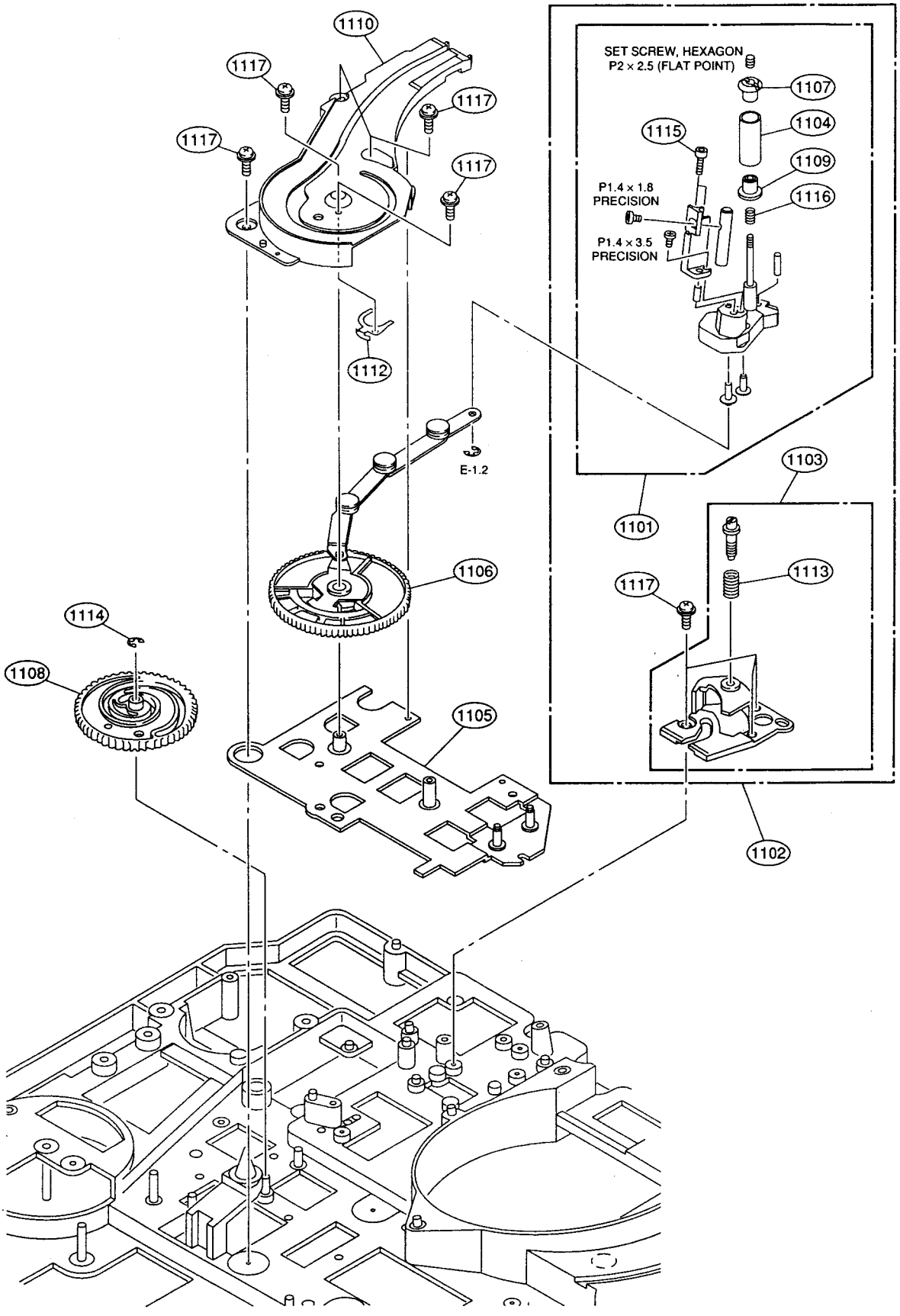
1110
1117
1117
1117
1117
1112
E-1.2
1106
1114
1108
1105
SET SCREW, HEXAGON
P2 x 2.5 (FLAT POINT)
1107
1104
1115
1109
P1.4 x 1.8
PRECISION
1116
P1.4 x 3.5
PRECISION
1103
1101
1113
1117
1102

T-SIDE THREADING LINK

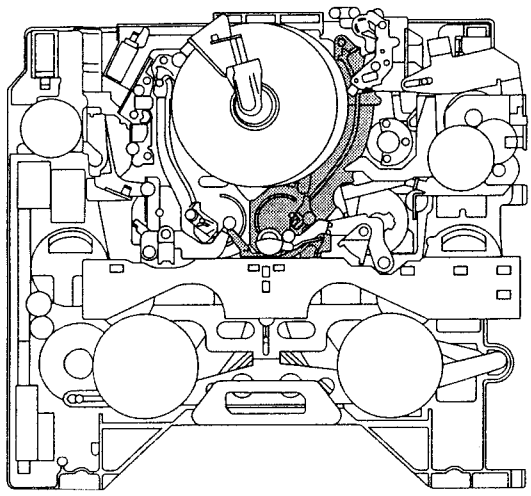

No.	Part No.	SP	Description
1201	A-8269-453-B	s	SLIDER ASSY, T
1202	A-8278-033-B	o	CATCHER T ASSY
1203	A-8278-667-A	s	BLOCK ASSY, T DRAWER
1204	X-3678-091-2	s	ROLLER ASSY
1205	X-3678-379-2	o	GEAR ASSY,THREADING T
1206	2-640-315-01	o	SCREW (M2X5), SMALL, +P, SW
1207	3-559-408-11	s	WASHER, POLYETHYLENE, DIA.1.2
1208	3-679-729-02	s	FLANGE,UPPER
1209	3-679-764-01	o	GEAR,MIDWAY,ST DRIVING
1210	3-691-344-01	o	RAIL,T
1211	3-691-352-02	s	GEAR,ST DRIVING
1212	3-691-563-01	o	PLATE,UNTHREAD GUIDING
1213	3-691-577-01	s	GUIDE,SLANT
1214	3-694-275-01	s	FLANGE,UNDER,T2
1215	3-716-167-01	s	SPRING, COMPRESSION
1216	3-727-809-01	s	BOLT (M1.4X5), HEXAGON SOCKET
1217	3-729-011-01	s	SPRING, COMPRESSION
1218	3-729-013-21	s	SCREW(M1.4X2.5),WASHERHEAD(+P)

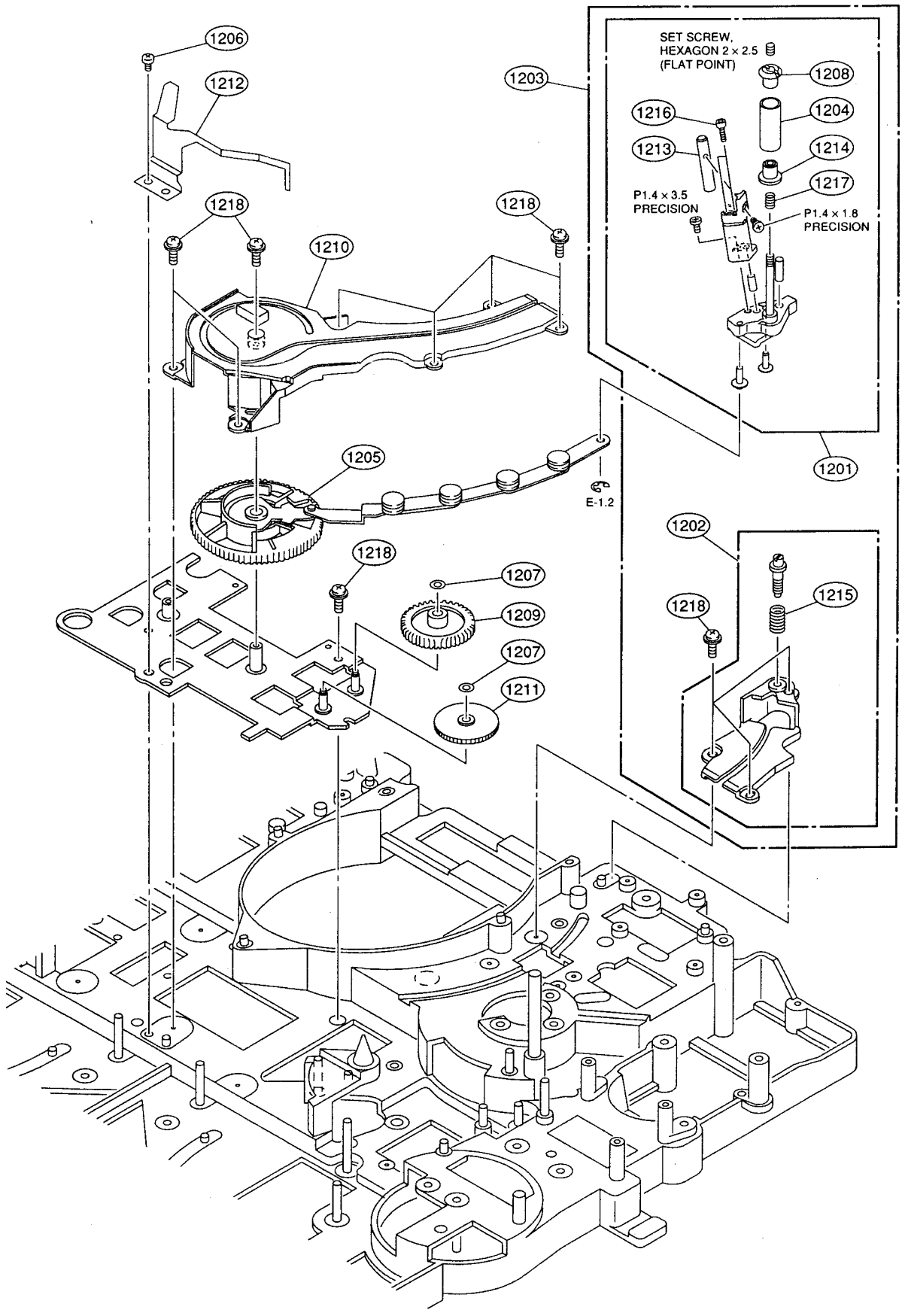
1206
1212
1203
SET SCREW,
HEXAGON 2 × 2.5
(FLAT POINT)
1208
1216
1204
1213
1214
1217
P1.4 × 3.5
PRECISION
P1.4 × 1.8
PRECISION
1218
1218
1210
1205
E-1.2
1201
1202
1218
1207
1215
1209
1218
1207
1211

CUE/TC HEAD AND CAPSTAN MOTOR

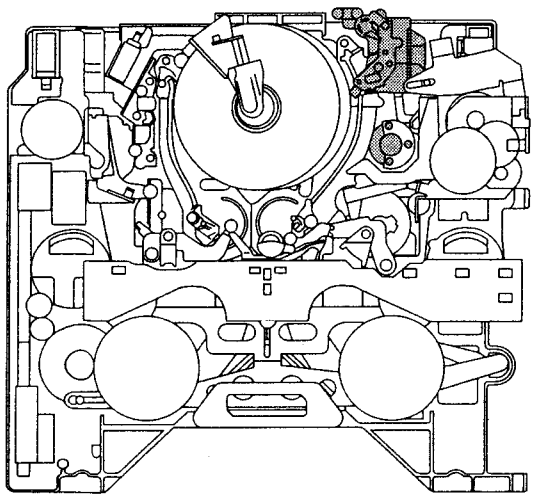

No.	Part No.	SP	Description
1301	A-8269-466-A	o	HEAD ASSY, EXIT
1302	X-3678-095-2	o	PLATE ASSY,BASE CUE/TC
1303	X-3678-112-1	o	PLATE ASSY,CUE/TC ADJUSTMENT
1304	X-3678-378-1	o	PLATE(A),HEAD ASSY
1305	X-3678-434-2	o	ARM ASSY,CLEANER
1306	2-640-315-01	o	SCREW (M2X5), SMALL, +P, SW
1307	3-171-570-01	o	PLATE (R), ADJUSTMENT
1308	3-321-393-01	s	WASHER, STOPPER
1309	3-680-005-01	o	SPRING,CUE/TC
1310	3-680-222-01	s	SPRING,COMPRESSION
1311	3-680-223-01	s	SHAFT
1312	3-680-225-01	o	SLEEVE,SHAFT,MAIN,CUE/TC
1313	3-680-233-01	o	SPRING,RTN
1314	3-680-262-02	o	PLATE,SWING,CUE/TC
1315	3-681-778-02	s	BRUSH,CUE
1316	3-689-893-01	o	CASE,SHIELD
1317	3-689-895-01	o	PLATE(B),HEAD
1318	3-691-881-01	o	HOLDER,HARNESS
1319	3-698-829-01	s	NUT (M2)
1320	3-701-437-11	s	WASHER
1321	3-701-439-11	s	WASHER
1322	3-729-013-21	s	SCREW(M1.4X2.5),WASHERHEAD(+P)
1323	3-729-013-41	s	SCREW(M1.4X3.5),WASHERHEAD(+P)
1324	8-825-920-01	s	HEAD, AUIDO EPS244-2103J
1325	8-835-534-01	s	MOTOR, DC SCV-0702A/J-N

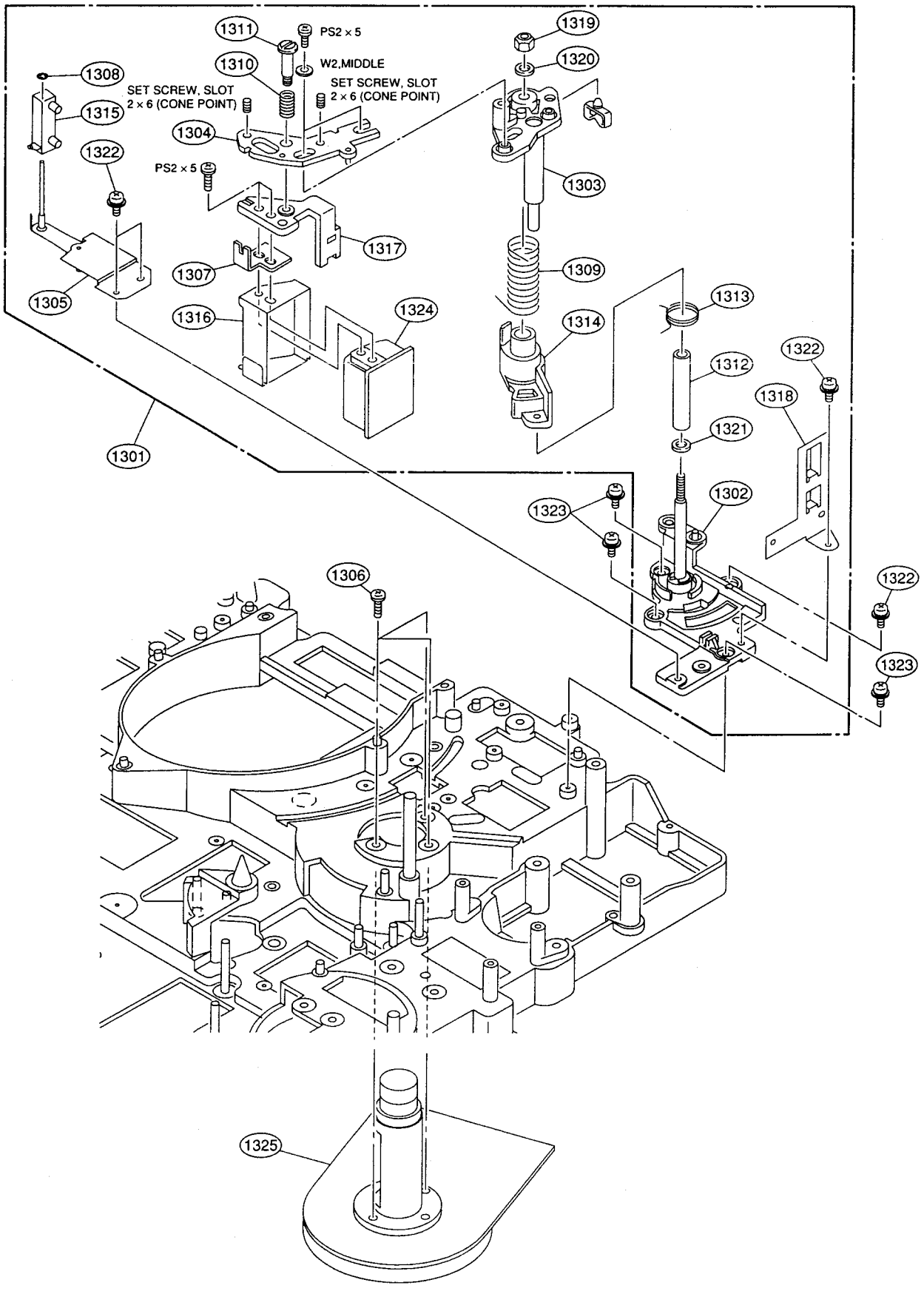
1311
PS2 × 5
1310
W2,MIDDLE
SET SCREW, SLOT
2 × 6 (CONE POINT)
SET SCREW, SLOT
2 × 6 (CONE POINT)
1308
1315
1304
1322
PS2 × 5
1317
1307
1305
1316
1324
1301
1319
1320
1303
1309
1314
1313
1312
1322
1318
1321
1302
1323
1306
1322
1323
1325

T-SIDE REEL MOTOR AND PINCH PRESS BLOCK

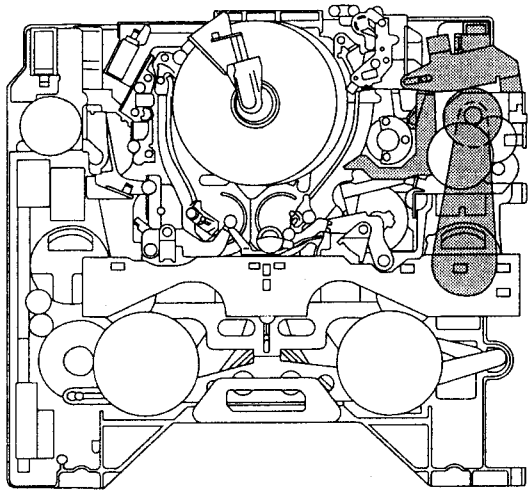

No.	Part No.	SP	Description
1401	A-8278-216-A	o	PLUNGER ASSY,PINCH PRESSING
1402	A-8278-217-B	o	ARM ASSY,PINCH PRESSING
1403	X-3165-731-2	s	ARM ASSY, BRAKE
1404	1-454-334-61	s	SOLENOID, PLUNGER
1405	1-454-383-31	s	SOLENOID, PLUNGER
1406	3-169-370-03	o	PULLEY, MOTOR
1407	3-169-371-02	s	PLATE, CLUTCH
1408	3-169-372-01	s	GEAR, REEL MOTOR DRIVING
1409	3-169-373-01	s	WASHER, SPRING
1410	3-169-503-03	s	PULLEY (B), RELAY
1411	3-172-003-01	s	BELT, DRIVING
1412	3-173-411-01	s	SPRING, BRAKE PLATE
1413	3-307-374-00	s	SPRING, TENSION
1414	3-345-408-01	s	SPRING, COMPRESSION
1415	3-371-875-01	s	SPRING (LOCK PLATE), TENSION
1416	3-637-331-00	s	SPRING, COMPRESSION (L)
1417	3-639-371-00	s	SPRING, TENSION
1418	3-642-482-00	s	SPRING, TENSION
1419	3-657-841-61	o	SPACER (2X1.6)
1420	3-669-596-01	s	WASHER (2.3), STOPPER
1421	3-676-387-00	s	POLY-SLIDER (DIA.1.6)
1422	3-691-564-01	o	LEVER,BRAKE RELEASE
1423	3-691-565-01	o	BASE,BRAKE RELEASE
1424	3-701-437-21	s	WASHER
1425	3-701-439-01	s	WASHER
1426	3-701-439-11	s	WASHER
1427	3-703-358-08	l	PIN, PARALLEL (DIA. 2X20)
1428	8-835-441-01	s	MOTOR R432276751A

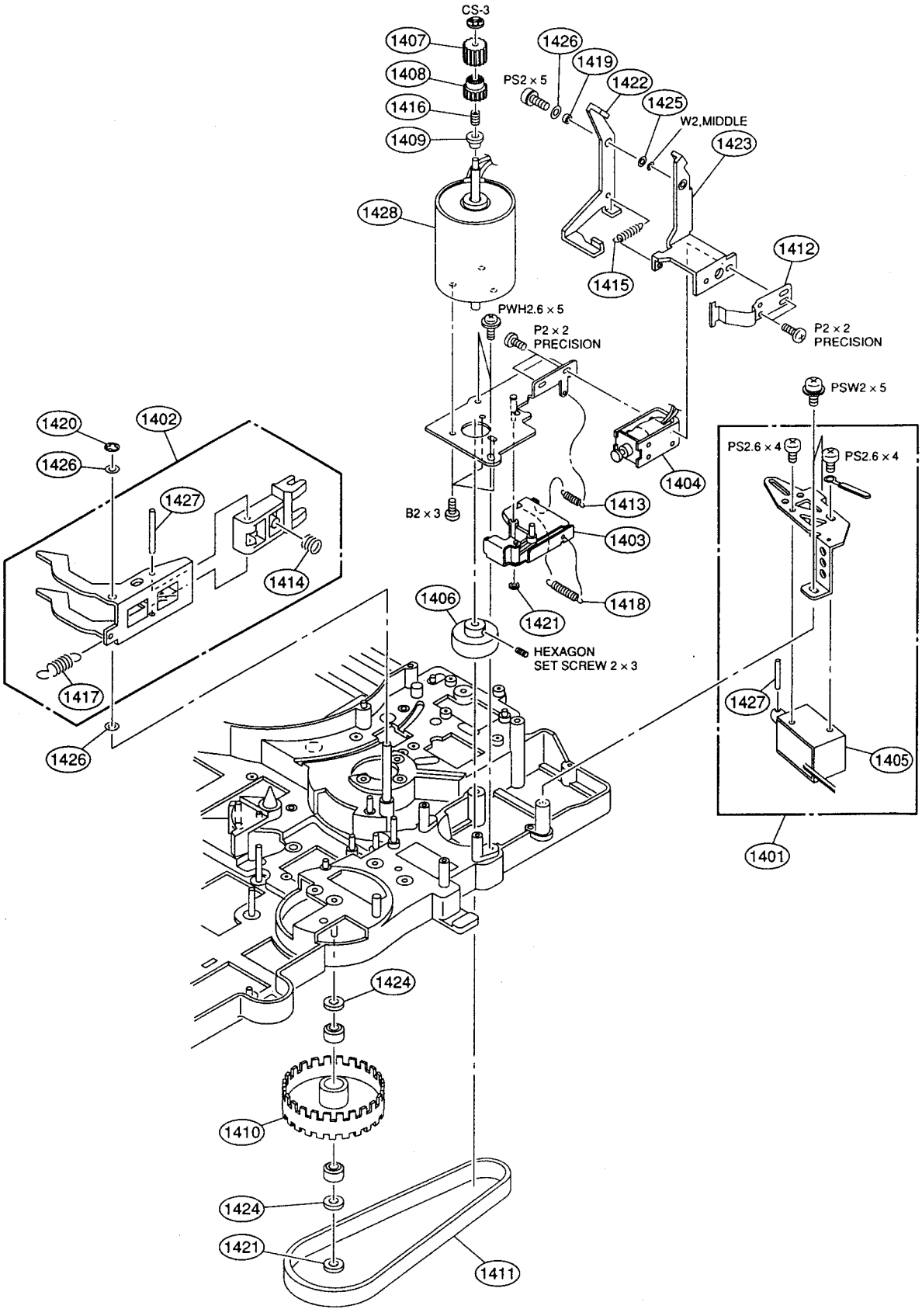
CS-3
1407
1408
1416
1409
1428
1426
1419
1422
1425
PS2 × 5
W2,MIDDLE
1423
1412
1415
PWH2.6 × 5
P2 × 2
PRECISION
P2 × 2
PRECISION
PSW2 × 5
1404
1413
B2 × 3
1403
1418
1406
1421
HEXAGON
SET SCREW 2 × 3
1420
1402
1426
1427
1414
1417
1426
PS2.6 × 4
PS2.6 × 4
1427
1405
1401
1424
1410
1424
1421
1411

THREADING MOTOR AND GEAR TRAIN

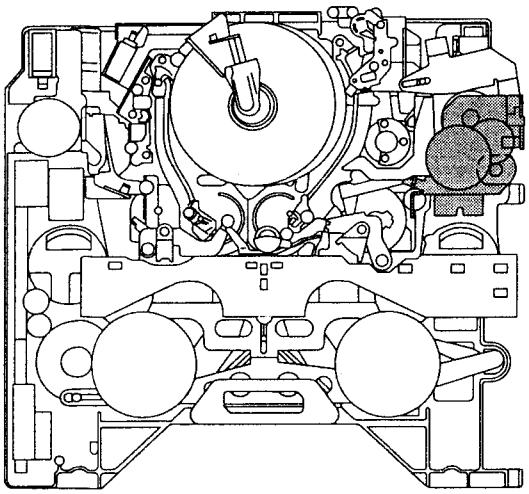

No.	Part No.	SP	Description
1501	A-8269-450-A	o	BLOCK ASSY, GEAR
1502	X-3678-385-1	o	EJECT ASSY,MANUAL
1503	1-543-316-21	s	HEAD, SENSING (SMALL TYPE)
1504	1-638-705-12	o	PRINTED CIRCUIT BOARD, DET-15
1505	2-279-715-01	s	RIVET, NYLON
1506	3-169-502-03	o	PLATE, LID OPEN
1507	3-561-540-01	s	SPRING, COMPRESSION
1508	3-669-465-01	s	WASHER (1.5), STOPPER
1509	3-679-748-01	s	PINION
1510	3-679-750-01	o	GEAR(B)
1511	3-679-799-01	o	SHAFT,GEAR
1512	3-680-263-01	o	GEAR(C)
1513	3-680-988-01	s	PINION B
1514	3-691-348-01	o	GEAR SHAFT(A)
1515	3-691-349-01	o	GEAR BLOCK PLATE(B)
1516	3-691-352-02	s	GEAR,ST DRIVING
1517	3-691-353-01	o	LIMITTER PLATE
1518	3-691-371-01	o	GEAR,MIDWAY
1519	3-691-372-01	o	DRIVING GEAR,MANUAL
1520	3-691-556-01	o	HOLDER,TOP SENSOR
1521	3-701-437-21	s	WASHER
1522	3-729-013-21	s	SCREW(M1.4X2.5),WASHERHEAD(+P)
1523	8-835-440-01	s	MOTOR DN20-Q7Z1B

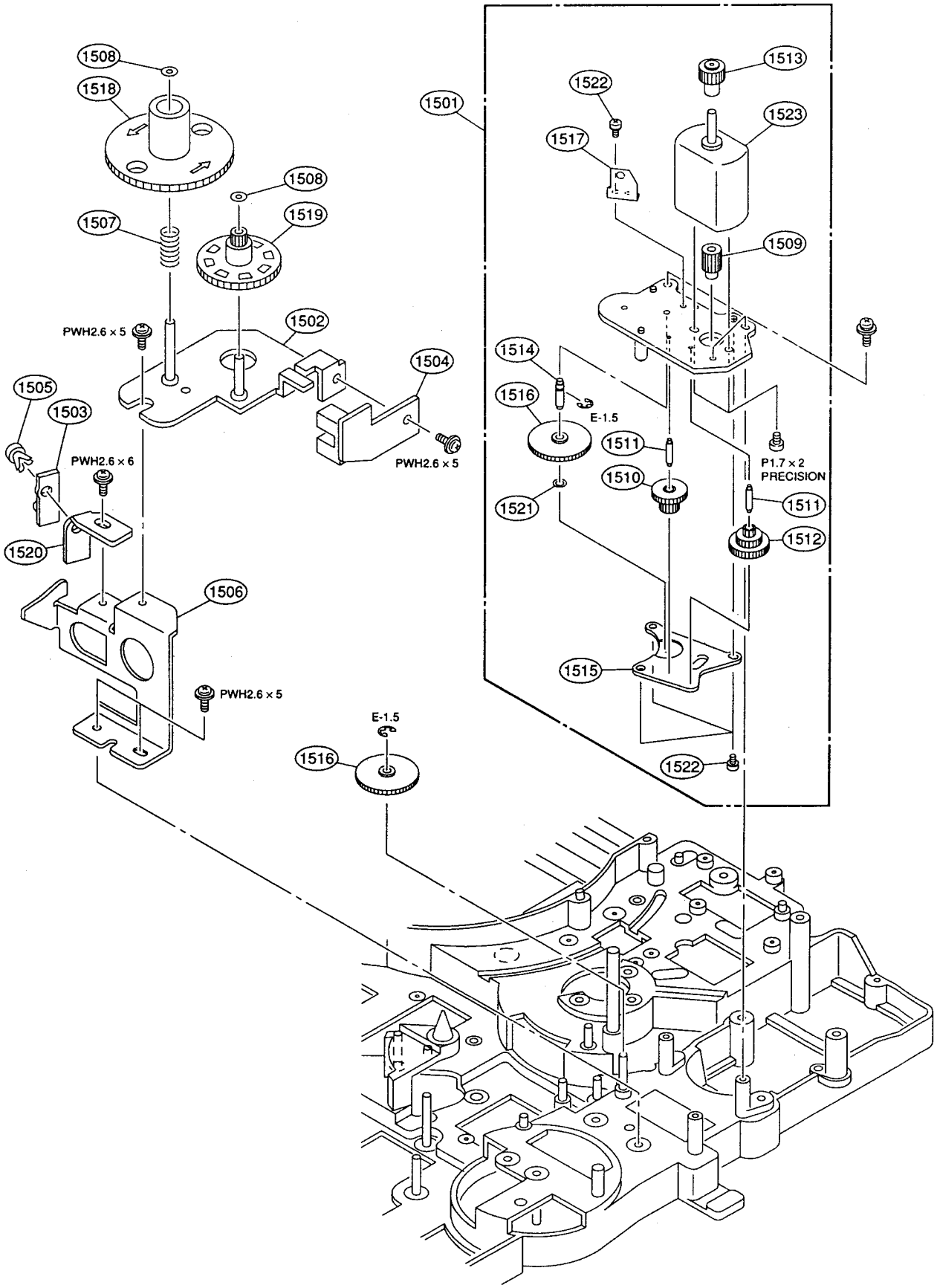
1508
1518
1508
1519
1507
PWH2.6 × 5
1502
1504
1505
1503
PWH2.6 × 6
PWH2.6 × 5
1520
1506
PWH2.6 × 5
E-1.5
1516
1501
1513
1522
1523
1517
1509
1514
1516
E-1.5
1511
1510
1521
P1.7 × 2
PRECISION
1511
1512
1515
1522

CUE LINK AND PINCH ARM

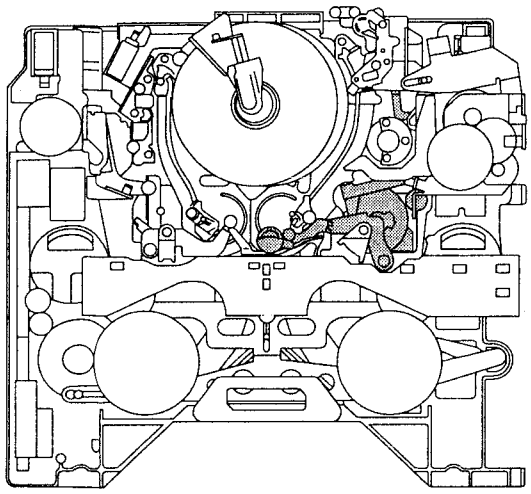

No.	Part No.	SP	Description
1601	A-8276-926-A	o	MOUNTED CIRCUIT BOARD, DET-26
1602	X-3678-091-2	s	ROLLER ASSY
1603	X-3678-382-1	o	LINK ASSY,CUE DRIVING
1604	X-3678-383-1	o	CUE DRIVING ARM ASSY (A)
1605	X-3678-384-1	o	GEAR ASSY,CAM
1606	X-3678-423-2	o	LINK ASSY,T
1607	X-3678-424-2	o	SUB ASSY,T ARM
1608	X-3678-425-3	s	ARM ASSY,PINCH ROLLER
1609	X-3678-461-1	s	GEAR ASSY,INTERMITTENT
1610	2-618-901-00	s	SPRING
1611	3-535-369-XX	s	SPRING, TENSION
1612	3-669-465-01	s	WASHER (1.5), STOPPER
1613	3-669-596-01	s	WASHER (2.3), STOPPER
1614	3-672-250-01	s	RING (M2.6), O
1615	3-683-340-01	o	ROLLER A
1616	3-689-899-02	s	SPRING,TORSION
1617	3-691-351-02	s	GEAR, MIDWAY
1618	3-691-355-02	s	GEAR,JOINT
1619	3-691-356-01	o	C SLEEVE
1620	3-691-357-01	s	C SLEEVE
1621	3-691-382-02	s	FLANGE,UPPER
1622	3-691-383-02	s	FLANGE,UNDER
1623	3-691-550-01	s	SPRING,PINCH RETURN
1624	3-692-093-01	o	LEVER,CUE CLEANER
1625	3-692-097-02	o	LEVER STOPPER
1626	3-701-436-21	s	WASHER, POLYEHTHYLENE
1627	3-701-437-01	s	WASHER
1628	3-701-437-11	s	WASHER
1629	3-701-437-21	s	WASHER
1630	3-701-439-11	s	WASHER
1631	3-726-829-01	l	WASHER, STOPPER
1632	3-729-011-01	s	SPRING, COMPRESSION
1633	3-729-013-21	s	SCREW(M1.4X2.5),WASHERHEAD(+P)

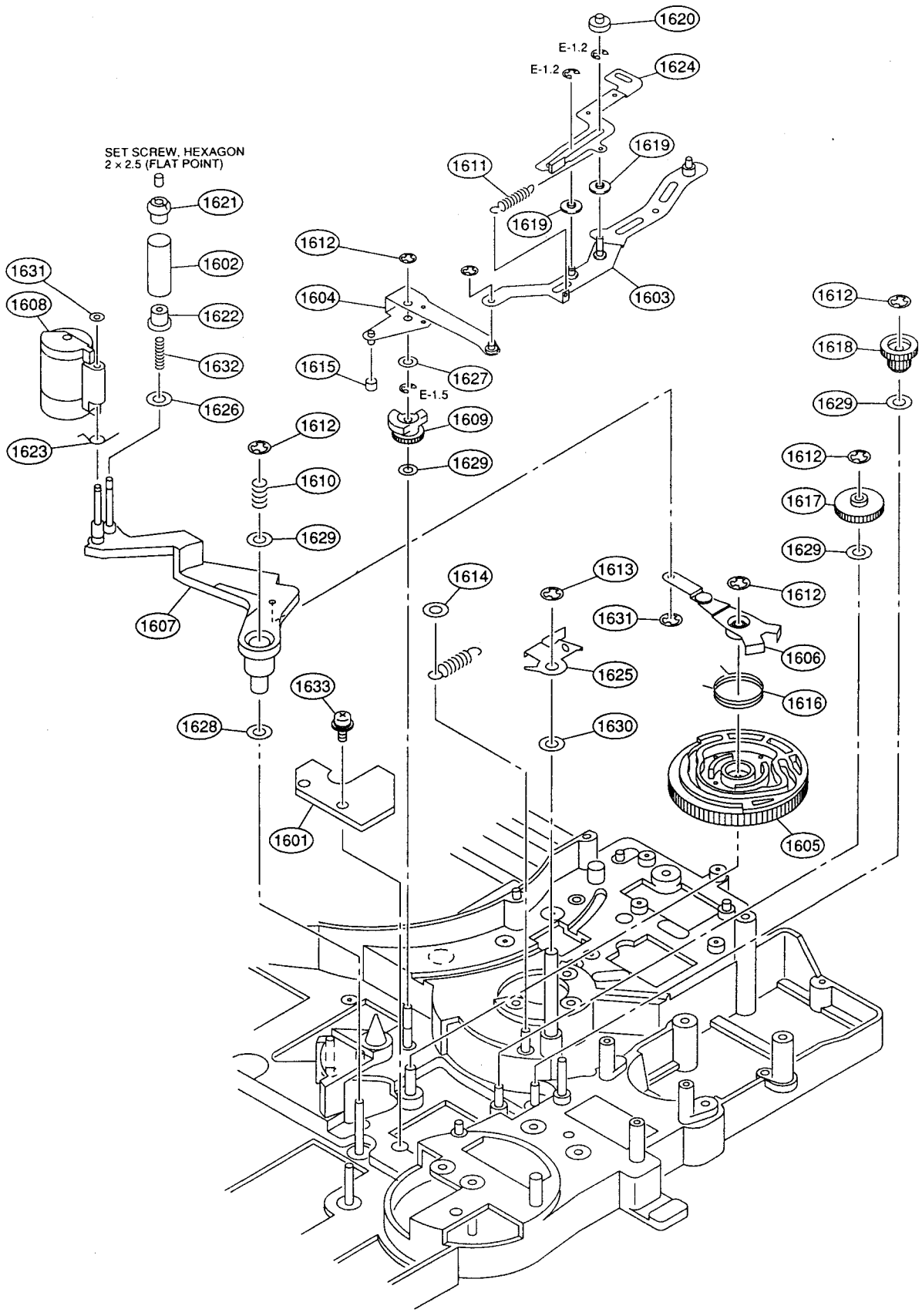
SET SCREW, HEXAGON
2 x 2.5 (FLAT POINT)
1620
E-1.2
E-1.2
1624
1619
1611
1619
1603
1612
1604
1615
1627
E-1.5
1609
1629
1612
1610
1629
1607
1631
1608
1621
1602
1622
1632
1626
1623
1612
1618
1629
1612
1617
1629
1614
1613
1631
1612
1606
1625
1616
1630
1633
1628
1601
1605

5-3. Electrical Parts List

ADA-44 BOARD

Ref. No. or Q'ty	Part No.	SP	Description
1pc	A-8276-930-A	o	MOUNTED CIRCUIT BOARD, ADA-44
C1	1-163-251-11	s	CERAMIC, CHIP 100PF 5% 50V
C2	1-163-251-11	s	CERAMIC, CHIP 100PF 5% 50V
C3	1-163-251-11	s	CERAMIC, CHIP 100PF 5% 50V
C4	1-162-927-11	s	CERAMIC, CHIP 100PF 5% 50V
C5	1-164-156-11	s	CERAMIC, CHIP 0.1uF 25V
C6	1-164-156-11	s	CERAMIC, CHIP 0.1uF 25V
C7	1-163-038-00	s	CERAMIC 0.1uF 25V
C8	1-164-156-11	s	CERAMIC, CHIP 0.1uF 25V
C9	1-163-251-11	s	CERAMIC, CHIP 100PF 5% 50V
C10	1-163-251-11	s	CERAMIC, CHIP 100PF 5% 50V
C11	1-163-251-11	s	CERAMIC, CHIP 100PF 5% 50V
C12	1-162-927-11	s	CERAMIC, CHIP 100PF 5% 50V
C13	1-126-396-11	s	ELECT, CHIP 47uF 20% 16V
C14	1-126-396-11	s	ELECT, CHIP 47uF 20% 16V
C15	1-126-396-11	s	ELECT, CHIP 47uF 20% 16V
C16	1-126-396-11	s	ELECT, CHIP 47uF 20% 16V
C17	1-135-216-11	s	TANTALUM, CHIP 10uF 20% 10V
C18	1-135-216-11	s	TANTALUM, CHIP 10uF 20% 10V
C19	1-135-216-11	s	TANTALUM, CHIP 10uF 20% 10V
C20	1-135-216-11	s	TANTALUM, CHIP 10uF 20% 10V
C21	1-164-156-11	s	CERAMIC, CHIP 0.1uF 25V
C22	1-164-156-11	s	CERAMIC, CHIP 0.1uF 25V
C23	1-164-156-11	s	CERAMIC, CHIP 0.1uF 25V
C24	1-164-156-11	s	CERAMIC, CHIP 0.1uF 25V
C29	1-164-156-11	s	CERAMIC, CHIP 0.1uF 25V
C30	1-104-553-11	s	FILM, CHIP 0.015uF 5% 16V
C31	1-104-553-11	s	FILM, CHIP 0.015uF 5% 16V
C32	1-104-553-11	s	FILM, CHIP 0.015uF 5% 16V
C33	1-104-553-11	s	FILM, CHIP 0.015uF 5% 16V
C34-41	1-164-156-11	s	CERAMIC, CHIP 0.1uF 25V
C42-49	1-162-927-11	s	CERAMIC, CHIP 100PF 5% 50V
C50	1-104-549-11	s	FILM, CHIP 0.0068uF 5% 16V
C51	1-104-549-11	s	FILM, CHIP 0.0068uF 5% 16V
C52	1-104-549-11	s	FILM, CHIP 0.0068uF 5% 16V
C53	1-104-549-11	s	FILM, CHIP 0.0068uF 5% 16V
C54	1-135-216-11	s	TANTALUM, CHIP 10uF 20% 10V
C55	1-135-216-11	s	TANTALUM, CHIP 10uF 20% 10V
C56	1-135-216-11	s	TANTALUM, CHIP 10uF 20% 10V
C57	1-135-216-11	s	TANTALUM, CHIP 10uF 20% 10V
C58	1-135-070-00	s	TANTALUM, CHIP 0.1uF 10% 35V
C59	1-135-070-00	s	TANTALUM, CHIP 0.1uF 10% 35V
C60	1-104-913-11	s	TANTALUM, CHIP 10uF 20% 16V
C61	1-104-913-11	s	TANTALUM, CHIP 10uF 20% 16V
C62	1-104-913-11	s	TANTALUM, CHIP 10uF 20% 16V
C63	1-104-913-11	s	TANTALUM, CHIP 10uF 20% 16V
C64-69	1-163-038-00	s	CERAMIC 0.1uF 25V
C70	1-104-913-11	s	TANTALUM, CHIP 10uF 20% 16V
C71	1-104-913-11	s	TANTALUM, CHIP 10uF 20% 16V
C72	1-164-346-11	s	CERAMIC 1uF 16V
C73	1-164-346-11	s	CERAMIC 1uF 16V
C74	1-164-346-11	s	CERAMIC 1uF 16V
C75	1-164-346-11	s	CERAMIC 1uF 16V
C76	1-164-156-11	s	CERAMIC, CHIP 0.1uF 25V
C201	1-164-156-11	s	CERAMIC, CHIP 0.1uF 25V
C202	1-135-216-11	s	TANTALUM, CHIP 10uF 20% 10V
C203	1-135-216-11	s	TANTALUM, CHIP 10uF 20% 10V
C204	1-135-216-11	s	TANTALUM, CHIP 10uF 20% 10V

(ADA-44 BOARD)

Ref. No. or Q'ty	Part No.	SP	Description
C205	1-135-216-11	s	TANTALUM, CHIP 10uF 20% 10V
C206	1-164-156-11	s	CERAMIC, CHIP 0.1uF 25V
C207	1-126-394-11	s	ELECT, CHIP 10uF 20% 16V
C208	1-104-913-11	s	TANTALUM, CHIP 10uF 20% 16V
C209	1-104-913-11	s	TANTALUM, CHIP 10uF 20% 16V
C210	1-135-216-11	s	TANTALUM, CHIP 10uF 20% 10V
C211	1-135-216-11	s	TANTALUM, CHIP 10uF 20% 10V
C212	1-135-216-11	s	TANTALUM, CHIP 10uF 20% 10V
C213	1-135-216-11	s	TANTALUM, CHIP 10uF 20% 10V
C214	1-164-156-11	s	CERAMIC, CHIP 0.1uF 25V
C215	1-164-156-11	s	CERAMIC, CHIP 0.1uF 25V
C216	1-164-156-11	s	CERAMIC, CHIP 0.1uF 25V
C217	1-164-156-11	s	CERAMIC, CHIP 0.1uF 25V
C218	1-162-927-11	s	CERAMIC, CHIP 100PF 5% 50V
C219	1-162-927-11	s	CERAMIC, CHIP 100PF 5% 50V
C220	1-162-927-11	s	CERAMIC, CHIP 100PF 5% 50V
C221	1-162-927-11	s	CERAMIC, CHIP 100PF 5% 50V
C222	1-104-543-11	s	FILM, CHIP 0.0022uF 5% 50V
C223	1-104-543-11	s	FILM, CHIP 0.0022uF 5% 50V
C224	1-104-543-11	s	FILM, CHIP 0.0022uF 5% 50V
C225	1-104-543-11	s	FILM, CHIP 0.0022uF 5% 50V
C226	1-104-539-11	s	FILM, CHIP 0.001uF 5% 50V
C227	1-104-539-11	s	FILM, CHIP 0.001uF 5% 50V
C228	1-104-539-11	s	FILM, CHIP 0.001uF 5% 50V
C229	1-104-539-11	s	FILM, CHIP 0.001uF 5% 50V
C230-241	1-164-156-11	s	CERAMIC, CHIP 0.1uF 25V
C242	1-135-216-11	s	TANTALUM, CHIP 10uF 20% 10V
C243	1-135-216-11	s	TANTALUM, CHIP 10uF 20% 10V
C244	1-135-216-11	s	TANTALUM, CHIP 10uF 20% 10V
C245	1-135-216-11	s	TANTALUM, CHIP 10uF 20% 10V
C246	1-164-156-11	s	CERAMIC, CHIP 0.1uF 25V
C247	1-164-156-11	s	CERAMIC, CHIP 0.1uF 25V
C248	1-164-156-11	s	CERAMIC, CHIP 0.1uF 25V
C249	1-164-156-11	s	CERAMIC, CHIP 0.1uF 25V
C250	1-104-551-11	s	FILM, CHIP 0.01uF 5% 16V
C251	1-104-551-11	s	FILM, CHIP 0.01uF 5% 16V
C252	1-104-551-11	s	FILM, CHIP 0.01uF 5% 16V
C253	1-104-551-11	s	FILM, CHIP 0.01uF 5% 16V
C254	1-164-156-11	s	CERAMIC, CHIP 0.1uF 25V
C255	1-164-156-11	s	CERAMIC, CHIP 0.1uF 25V
C260	1-164-156-11	s	CERAMIC, CHIP 0.1uF 25V
C261	1-164-156-11	s	CERAMIC, CHIP 0.1uF 25V
C262	1-135-216-11	s	TANTALUM, CHIP 10uF 20% 10V
C263	1-135-216-11	s	TANTALUM, CHIP 10uF 20% 10V
C264	1-135-216-11	s	TANTALUM, CHIP 10uF 20% 10V
C265	1-135-216-11	s	TANTALUM, CHIP 10uF 20% 10V
C351	1-164-156-11	s	CERAMIC, CHIP 0.1uF 25V
C352	1-164-156-11	s	CERAMIC, CHIP 0.1uF 25V
C353	1-135-216-11	s	TANTALUM, CHIP 10uF 20% 10V
C354-364	1-164-156-11	s	CERAMIC, CHIP 0.1uF 25V
C365	1-164-346-11	s	CERAMIC 1uF 16V
C366	1-164-346-11	s	CERAMIC 1uF 16V
C367	1-164-346-11	s	CERAMIC 1uF 16V
C368	1-164-346-11	s	CERAMIC 1uF 16V
C369-373	1-164-156-11	s	CERAMIC, CHIP 0.1uF 25V
C374	1-126-396-11	s	ELECT, CHIP 47uF 20% 16V
C375	1-126-396-11	s	ELECT, CHIP 47uF 20% 16V
C376	1-104-608-11	s	ELECT, CHIP 33uF 20% 6.3V
C377	1-128-394-11	s	ELECT 220uF 20% 10V

(ADA-44 BOARD)

Ref. No. or Q'ty	Part No.	SP	Description
C378	1-128-394-11	s	ELECT 220uF 20% 10V
C379	1-126-393-11	s	ELECT, CHIP 33uF 20% 10V
C380	1-126-393-11	s	ELECT, CHIP 33uF 20% 10V
C381	1-126-393-11	s	ELECT, CHIP 33uF 20% 10V
C382	1-126-393-11	s	ELECT, CHIP 33uF 20% 10V
C383	1-164-156-11	s	CERAMIC, CHIP 0.1uF 25V
C384	1-104-608-11	s	ELECT, CHIP 33uF 20% 6.3V
C385-390	1-126-393-11	s	ELECT, CHIP 33uF 20% 10V
CN551	1-565-884-11	o	CONNECTOR 12P, MALE
CN552	1-568-521-11	o	CONNECTOR 13P, MALE
CN553	1-565-882-11	o	CONNECTOR, 10P, MALE
CN554	1-565-877-11	s	CONNECTOR, PC BOARD 5P, MALE
CN555	1-565-882-11	o	CONNECTOR, 10P, MALE
CN556	1-565-884-11	o	CONNECTOR 12P, MALE
CN557	1-566-758-11	o	CONNECTOR 3P, MALE
CN558	1-569-761-11	s	CONNECTOR, BOARD TO BOATD 20P
CN559	1-565-878-11	s	CONNECTOR 6P, MALE
D1	8-719-989-08	s	DIODE RB717F
D2	8-719-989-08	s	DIODE RB717F
D3	8-719-989-08	s	DIODE RB717F
D4	8-719-989-08	s	DIODE RB717F
D5	8-719-988-82	s	DIODE RB715F
D6	8-719-988-82	s	DIODE RB715F
D7	8-719-988-82	s	DIODE RB715F
D8	8-719-988-82	s	DIODE RB715F
D9	8-719-941-86	s	DIODE DAN202U
D201	8-719-941-86	s	DIODE DAN202U
D202	8-719-941-86	s	DIODE DAN202U
D351	8-759-710-88	s	IC NJM431U
D354	8-719-157-23	s	DIODE RD4.7M-B
D355	8-719-157-23	s	DIODE RD4.7M-B
D356	8-719-157-23	s	DIODE RD4.7M-B
D357	8-719-157-36	s	DIODE RD6.8M-B
D358	8-719-157-23	s	DIODE RD4.7M-B
D359	8-719-157-36	s	DIODE RD6.8M-B
D360	8-719-157-23	s	DIODE RD4.7M-B
D361	8-719-157-36	s	DIODE RD6.8M-B
D362	8-719-157-23	s	DIODE RD4.7M-B
IC1-8	8-759-711-85	s	IC NJM4580E-D(T2)
IC9	8-759-336-17	s	IC AK5390-VS
IC10	8-759-336-17	s	IC AK5390-VS
IC11	8-759-079-60	s	IC TC74VHC32FS(EL)
IC12	8-759-079-66	s	IC TC74VHC123AFS(EL)
IC201	8-759-079-61	s	IC TC74VHC74FS(EL)
IC202	8-759-079-80	s	IC TC74VHC175FS(EL)
IC203	8-759-170-85	s	IC PCM69U-J-T1
IC204	8-759-170-85	s	IC PCM69U-J-T1
IC205-210	8-759-711-85	s	IC NJM4580E-D(T2)
IC310	8-759-711-58	s	IC NJM78L05UA
IC351	8-759-701-01	s	IC NJM2904M
IC352	8-759-702-02	s	IC NJM062M
IC353	8-759-702-02	s	IC NJM062M
IC354	8-759-079-60	s	IC TC74VHC32FS(EL)
IC355	8-759-186-84	s	IC TC74VHC86F
IC356	8-759-300-71	s	IC HD14053BFP
IC357	8-759-009-06	s	IC MC14052BF
IC358	8-759-009-06	s	IC MC14052BF

(ADA-44 BOARD)

Ref. No. or Q'ty	Part No.	SP	Description
IC359	8-759-702-02	s	IC NJM062M
IC360	8-759-702-02	s	IC NJM062M
IC361	8-759-702-02	s	IC NJM062M
Q1	8-729-140-63	s	TRANSISTOR 2SA1611-M5M6
Q2	8-729-012-35	s	TRANSISTOR 2SK711-BL
Q3	8-729-012-35	s	TRANSISTOR 2SK711-BL
Q4	8-729-012-35	s	TRANSISTOR 2SK711-BL
Q5	8-729-012-35	s	TRANSISTOR 2SK711-BL
Q201	8-729-140-63	s	TRANSISTOR 2SA1611-M5M6
Q202	8-729-140-63	s	TRANSISTOR 2SA1611-M5M6
Q203	8-729-140-63	s	TRANSISTOR 2SA1611-M5M6
Q204	8-729-140-63	s	TRANSISTOR 2SA1611-M5M6
Q205	8-729-012-35	s	TRANSISTOR 2SK711-BL
Q206	8-729-012-35	s	TRANSISTOR 2SK711-BL
Q207	8-729-012-35	s	TRANSISTOR 2SK711-BL
Q208	8-729-012-35	s	TRANSISTOR 2SK711-BL
Q351	8-729-029-06	s	TRANSISTOR DTC124EUA-T106
Q352	8-729-029-06	s	TRANSISTOR DTC124EUA-T106
Q353	8-729-028-83	s	TRANSISTOR DTA124EUA-T106
Q354	8-729-028-83	s	TRANSISTOR DTA124EUA-T106
Q355	8-729-028-83	s	TRANSISTOR DTA124EUA-T106
Q356	8-729-028-83	s	TRANSISTOR DTA124EUA-T106
Q357	8-729-209-07	s	TRANSISTOR 2SC4213-B
Q358	8-729-209-07	s	TRANSISTOR 2SC4213-B
Q359	8-729-209-07	s	TRANSISTOR 2SC4213-B
Q360	8-729-209-07	s	TRANSISTOR 2SC4213-B
Q361	8-729-807-51	s	TRANSISTOR 2SD1623-S
Q362	8-729-101-07	s	TRANSISTOR 2SB798
Q364	8-729-807-87	s	TRANSISTOR 2SB1295-UL6
Q365	8-729-809-47	s	TRANSISTOR 2SD1935-CT7
Q366	8-729-807-87	s	TRANSISTOR 2SB1295-UL6
Q367	8-729-809-47	s	TRANSISTOR 2SD1935-CT7
Q368	8-729-101-07	s	TRANSISTOR 2SB798
Q369	8-729-809-47	s	TRANSISTOR 2SD1935-CT7
R5	1-216-833-11	s	METAL, CHIP 10K 5% 1/16W
R6-13	1-208-801-11	s	METAL, CHIP 6.2K 0.5% 1/10W
R14	1-218-720-11	s	METAL, CHIP 15K 0.5% 1/16W
R15	1-218-729-11	s	METAL, CHIP 36K 0.5% 1/16W
R16	1-218-867-11	s	METAL, CHIP 6.8K 0.5% 1/16W
R17	1-218-867-11	s	METAL, CHIP 6.8K 0.5% 1/16W
R18	1-218-867-11	s	METAL, CHIP 6.8K 0.5% 1/16W
R19	1-218-867-11	s	METAL, CHIP 6.8K 0.5% 1/16W
R20	1-216-651-11	s	METAL, CHIP 1K 0.5% 1/10W
R21	1-216-651-11	s	METAL, CHIP 1K 0.5% 1/10W
R22	1-216-651-11	s	METAL, CHIP 1K 0.5% 1/10W
R23	1-216-651-11	s	METAL, CHIP 1K 0.5% 1/10W
R24	1-218-867-11	s	METAL, CHIP 6.8K 0.5% 1/16W
R25	1-218-867-11	s	METAL, CHIP 6.8K 0.5% 1/16W
R26	1-218-867-11	s	METAL, CHIP 6.8K 0.5% 1/16W
R27	1-218-867-11	s	METAL, CHIP 6.8K 0.5% 1/16W
R28	1-216-821-11	s	METAL, CHIP 1K 5% 1/16W
R32-36	1-216-864-11	s	METAL, CHIP 0
R37	1-216-295-00	s	RES, CHIP 0
R38	1-216-295-00	s	RES, CHIP 0
R39	1-216-295-00	s	RES, CHIP 0
R44	1-208-806-11	s	METAL, CHIP 10K 0.5% 1/10W
R45	1-208-806-11	s	METAL, CHIP 10K 0.5% 1/10W
R46	1-208-806-11	s	METAL, CHIP 10K 0.5% 1/10W

(ADA-44 BOARD)

Ref. No. or Q'ty	Part No.	SP	Description
R47	1-208-806-11	s	METAL, CHIP 10K 0.5% 1/10W
R48	1-216-699-11	s	METAL, CHIP 100K 0.5% 1/10W
R49	1-216-699-11	s	METAL, CHIP 100K 0.5% 1/10W
R50	1-216-699-11	s	METAL, CHIP 100K 0.5% 1/10W
R51	1-216-699-11	s	METAL, CHIP 100K 0.5% 1/10W
R56	1-218-704-11	s	METAL, CHIP 3.3K 0.5% 1/16W
R57	1-218-704-11	s	METAL, CHIP 3.3K 0.5% 1/16W
R58	1-218-704-11	s	METAL, CHIP 3.3K 0.5% 1/16W
R59	1-218-704-11	s	METAL, CHIP 3.3K 0.5% 1/16W
R64	1-218-870-11	s	METAL, CHIP 9.1K 0.5% 1/16W
R65	1-218-901-11	s	METAL, CHIP 180K 0.5% 1/16W
R66	1-218-716-11	s	METAL, CHIP 10K 0.5% 1/16W
R67	1-218-901-11	s	METAL, CHIP 180K 0.5% 1/16W
R68	1-218-707-11	s	METAL, CHIP 4.3K 0.5% 1/16W
R69	1-218-870-11	s	METAL, CHIP 9.1K 0.5% 1/16W
R70	1-218-901-11	s	METAL, CHIP 180K 0.5% 1/16W
R71	1-218-716-11	s	METAL, CHIP 10K 0.5% 1/16W
R72	1-218-901-11	s	METAL, CHIP 180K 0.5% 1/16W
R73	1-218-707-11	s	METAL, CHIP 4.3K 0.5% 1/16W
R74	1-218-870-11	s	METAL, CHIP 9.1K 0.5% 1/16W
R75	1-218-901-11	s	METAL, CHIP 180K 0.5% 1/16W
R76	1-218-716-11	s	METAL, CHIP 10K 0.5% 1/16W
R77	1-218-901-11	s	METAL, CHIP 180K 0.5% 1/16W
R78	1-218-707-11	s	METAL, CHIP 4.3K 0.5% 1/16W
R79	1-218-870-11	s	METAL, CHIP 9.1K 0.5% 1/16W
R80	1-218-901-11	s	METAL, CHIP 180K 0.5% 1/16W
R81	1-218-716-11	s	METAL, CHIP 10K 0.5% 1/16W
R82	1-218-901-11	s	METAL, CHIP 180K 0.5% 1/16W
R83	1-218-707-11	s	METAL, CHIP 4.3K 0.5% 1/16W
R88	1-218-708-11	s	METAL, CHIP 4.7K 0.5% 1/16W
R89	1-218-708-11	s	METAL, CHIP 4.7K 0.5% 1/16W
R90	1-218-708-11	s	METAL, CHIP 4.7K 0.5% 1/16W
R91	1-218-708-11	s	METAL, CHIP 4.7K 0.5% 1/16W
R92	1-216-833-11	s	METAL, CHIP 10K 5% 1/16W
R93	1-216-833-11	s	METAL, CHIP 10K 5% 1/16W
R94	1-216-833-11	s	METAL, CHIP 10K 5% 1/16W
R95	1-216-833-11	s	METAL, CHIP 10K 5% 1/16W
R96	1-216-857-11	s	METAL, CHIP 1M 5% 1/16W
R97	1-216-857-11	s	METAL, CHIP 1M 5% 1/16W
R98	1-216-857-11	s	METAL, CHIP 1M 5% 1/16W
R99	1-216-121-00	s	METAL, CHIP 1M 5% 1/10W
R100	1-216-851-11	s	METAL, CHIP 330K 5% 1/16W
R101	1-216-851-11	s	METAL, CHIP 330K 5% 1/16W
R102	1-216-851-11	s	METAL, CHIP 330K 5% 1/16W
R103	1-216-851-11	s	METAL, CHIP 330K 5% 1/16W
R104	1-218-692-11	s	METAL, CHIP 1K 0.5% 1/16W
R105	1-218-692-11	s	METAL, CHIP 1K 0.5% 1/16W
R106	1-218-692-11	s	METAL, CHIP 1K 0.5% 1/16W
R107	1-218-692-11	s	METAL, CHIP 1K 0.5% 1/16W
R108	1-216-857-11	s	METAL, CHIP 1M 5% 1/16W
R109	1-216-857-11	s	METAL, CHIP 1M 5% 1/16W
R110	1-216-857-11	s	METAL, CHIP 1M 5% 1/16W
R111	1-216-857-11	s	METAL, CHIP 1M 5% 1/16W
R112	1-218-704-11	s	METAL, CHIP 3.3K 0.5% 1/16W
R113	1-216-813-11	s	METAL, CHIP 220 5% 1/16W
R114	1-218-704-11	s	METAL, CHIP 3.3K 0.5% 1/16W
R115	1-216-813-11	s	METAL, CHIP 220 5% 1/16W
R116	1-218-704-11	s	METAL, CHIP 3.3K 0.5% 1/16W
R117	1-216-813-11	s	METAL, CHIP 220 5% 1/16W

(ADA-44 BOARD)

Ref. No. or Q'ty	Part No.	SP	Description
R118	1-218-704-11	s	METAL, CHIP 3.3K 0.5% 1/16W
R119	1-216-033-00	s	METAL, CHIP 220 5% 1/10W
R120-124	1-218-889-11	s	METAL, CHIP 56K 0.5% 1/16W
R125	1-218-704-11	s	METAL, CHIP 3.3K 0.5% 1/16W
R126	1-218-889-11	s	METAL, CHIP 56K 0.5% 1/16W
R127	1-218-704-11	s	METAL, CHIP 3.3K 0.5% 1/16W
R128	1-218-889-11	s	METAL, CHIP 56K 0.5% 1/16W
R129	1-218-704-11	s	METAL, CHIP 3.3K 0.5% 1/16W
R130	1-218-889-11	s	METAL, CHIP 56K 0.5% 1/16W
R131	1-218-704-11	s	METAL, CHIP 3.3K 0.5% 1/16W
R132	1-218-866-11	s	METAL, CHIP 6.2K 0.5% 1/16W
R134	1-218-866-11	s	METAL, CHIP 6.2K 0.5% 1/16W
R136	1-218-866-11	s	METAL, CHIP 6.2K 0.5% 1/16W
R138	1-218-866-11	s	METAL, CHIP 6.2K 0.5% 1/16W
R140-147	1-211-991-11	s	METAL, CHIP 82 0.5% 1/16W
R148	1-216-821-11	s	METAL, CHIP 1K 5% 1/16W
R149	1-216-821-11	s	METAL, CHIP 1K 5% 1/16W
R150	1-216-845-11	s	METAL, CHIP 100K 5% 1/16W
R151	1-216-845-11	s	METAL, CHIP 100K 5% 1/16W
R153	1-216-845-11	s	METAL, CHIP 100K 5% 1/16W
R155	1-216-809-11	s	METAL, CHIP 100 5% 1/16W
R157	1-216-809-11	s	METAL, CHIP 100 5% 1/16W
R158	1-216-809-11	s	METAL, CHIP 100 5% 1/16W
R159	1-216-809-11	s	METAL, CHIP 100 5% 1/16W
R201-205	1-216-809-11	s	METAL, CHIP 100 5% 1/16W
R206	1-216-025-00	s	METAL, CHIP 100 5% 1/10W
R207	1-216-025-00	s	METAL, CHIP 100 5% 1/10W
R208-222	1-216-845-11	s	METAL, CHIP 100K 5% 1/16W
R223	1-216-097-00	s	METAL, CHIP 100K 5% 1/10W
R224	1-216-097-00	s	METAL, CHIP 100K 5% 1/10W
R225	1-216-097-00	s	METAL, CHIP 100K 5% 1/10W
R226	1-216-097-00	s	METAL, CHIP 100K 5% 1/10W
R227	1-216-830-11	s	METAL, CHIP 5.6K 5% 1/16W
R228	1-216-830-11	s	METAL, CHIP 5.6K 5% 1/16W
R229	1-216-830-11	s	METAL, CHIP 5.6K 5% 1/16W
R230	1-216-830-11	s	METAL, CHIP 5.6K 5% 1/16W
R231	1-216-851-11	s	METAL, CHIP 330K 5% 1/16W
R232	1-216-851-11	s	METAL, CHIP 330K 5% 1/16W
R233	1-216-851-11	s	METAL, CHIP 330K 5% 1/16W
R234	1-216-851-11	s	METAL, CHIP 330K 5% 1/16W
R235	1-218-699-11	s	METAL, CHIP 2K 0.5% 1/16W
R236	1-218-699-11	s	METAL, CHIP 2K 0.5% 1/16W
R237	1-218-699-11	s	METAL, CHIP 2K 0.5% 1/16W
R238	1-218-699-11	s	METAL, CHIP 2K 0.5% 1/16W
R239	1-216-067-00	s	METAL, CHIP 5.6K 5% 1/10W
R240	1-216-067-00	s	METAL, CHIP 5.6K 5% 1/10W
R241	1-216-830-11	s	METAL, CHIP 5.6K 5% 1/16W
R242	1-216-830-11	s	METAL, CHIP 5.6K 5% 1/16W
R243	1-218-704-11	s	METAL, CHIP 3.3K 0.5% 1/16W
R244	1-218-704-11	s	METAL, CHIP 3.3K 0.5% 1/16W
R245	1-218-704-11	s	METAL, CHIP 3.3K 0.5% 1/16W
R246	1-218-704-11	s	METAL, CHIP 3.3K 0.5% 1/16W
R247-254	1-218-851-11	s	METAL, CHIP 1.5K 0.5% 1/16W
R255	1-216-833-11	s	METAL, CHIP 10K 5% 1/16W
R256	1-216-833-11	s	METAL, CHIP 10K 5% 1/16W
R257	1-216-833-11	s	METAL, CHIP 10K 5% 1/16W
R258	1-216-073-00	s	METAL, CHIP 10K 5% 1/10W
R259	1-216-666-11	s	METAL, CHIP 4.3K 0.5% 1/10W
R260	1-216-666-11	s	METAL, CHIP 4.3K 0.5% 1/10W

(ADA-44 BOARD)

Ref. No. or Q'ty	Part No.	SP	Description
R261	1-216-666-11	s	METAL, CHIP 4.3K 0.5% 1/10W
R262	1-216-666-11	s	METAL, CHIP 4.3K 0.5% 1/10W
R263	1-218-720-11	s	METAL, CHIP 15K 0.5% 1/16W
R264	1-218-729-11	s	METAL, CHIP 36K 0.5% 1/16W
R265	1-218-720-11	s	METAL, CHIP 15K 0.5% 1/16W
R266	1-218-729-11	s	METAL, CHIP 36K 0.5% 1/16W
R267	1-218-720-11	s	METAL, CHIP 15K 0.5% 1/16W
R268	1-218-729-11	s	METAL, CHIP 36K 0.5% 1/16W
R269	1-218-720-11	s	METAL, CHIP 15K 0.5% 1/16W
R270	1-218-729-11	s	METAL, CHIP 36K 0.5% 1/16W
R271	1-216-830-11	s	METAL, CHIP 5.6K 5% 1/16W
R272	1-216-821-11	s	METAL, CHIP 1K 5% 1/16W
R273	1-216-830-11	s	METAL, CHIP 5.6K 5% 1/16W
R274	1-216-821-11	s	METAL, CHIP 1K 5% 1/16W
R275	1-216-830-11	s	METAL, CHIP 5.6K 5% 1/16W
R276	1-216-821-11	s	METAL, CHIP 1K 5% 1/16W
R277	1-216-830-11	s	METAL, CHIP 5.6K 5% 1/16W
R278	1-216-821-11	s	METAL, CHIP 1K 5% 1/16W
R279	1-216-844-11	s	METAL, CHIP 82K 5% 1/16W
R280	1-216-844-11	s	METAL, CHIP 82K 5% 1/16W
R281	1-216-844-11	s	METAL, CHIP 82K 5% 1/16W
R282	1-216-844-11	s	METAL, CHIP 82K 5% 1/16W
R283	1-218-722-11	s	METAL, CHIP 18K 0.5% 1/16W
R284	1-218-845-11	s	METAL, CHIP 820 0.5% 1/16W
R285	1-218-722-11	s	METAL, CHIP 18K 0.5% 1/16W
R286	1-218-845-11	s	METAL, CHIP 820 0.5% 1/16W
R287	1-218-722-11	s	METAL, CHIP 18K 0.5% 1/16W
R288	1-218-845-11	s	METAL, CHIP 820 0.5% 1/16W
R289	1-218-722-11	s	METAL, CHIP 18K 0.5% 1/16W
R290	1-218-845-11	s	METAL, CHIP 820 0.5% 1/16W
R291	1-216-655-11	s	METAL, CHIP 1.5K 0.5% 1/10W
R292	1-216-655-11	s	METAL, CHIP 1.5K 0.5% 1/10W
R293	1-216-655-11	s	METAL, CHIP 1.5K 0.5% 1/10W
R294	1-216-655-11	s	METAL, CHIP 1.5K 0.5% 1/10W
R295	1-216-121-00	s	METAL, CHIP 1M 5% 1/10W
R296	1-216-121-00	s	METAL, CHIP 1M 5% 1/10W
R297	1-216-121-00	s	METAL, CHIP 1M 5% 1/10W
R298	1-216-121-00	s	METAL, CHIP 1M 5% 1/10W
R299	1-218-707-11	s	METAL, CHIP 4.3K 0.5% 1/16W
R300	1-218-707-11	s	METAL, CHIP 4.3K 0.5% 1/16W
R301	1-218-707-11	s	METAL, CHIP 4.3K 0.5% 1/16W
R302	1-218-707-11	s	METAL, CHIP 4.3K 0.5% 1/16W
R303	1-218-720-11	s	METAL, CHIP 15K 0.5% 1/16W
R304	1-218-738-11	s	METAL, CHIP 82K 0.5% 1/16W
R305	1-218-738-11	s	METAL, CHIP 82K 0.5% 1/16W
R306	1-218-727-11	s	METAL, CHIP 30K 0.5% 1/16W
R307	1-218-729-11	s	METAL, CHIP 36K 0.5% 1/16W
R308	1-218-720-11	s	METAL, CHIP 15K 0.5% 1/16W
R309	1-218-738-11	s	METAL, CHIP 82K 0.5% 1/16W
R310	1-218-738-11	s	METAL, CHIP 82K 0.5% 1/16W
R311	1-218-727-11	s	METAL, CHIP 30K 0.5% 1/16W
R312	1-218-729-11	s	METAL, CHIP 36K 0.5% 1/16W
R313	1-218-720-11	s	METAL, CHIP 15K 0.5% 1/16W
R314	1-218-738-11	s	METAL, CHIP 82K 0.5% 1/16W
R315	1-218-738-11	s	METAL, CHIP 82K 0.5% 1/16W
R316	1-218-727-11	s	METAL, CHIP 30K 0.5% 1/16W
R317	1-218-729-11	s	METAL, CHIP 36K 0.5% 1/16W
R318	1-218-720-11	s	METAL, CHIP 15K 0.5% 1/16W
R319	1-218-738-11	s	METAL, CHIP 82K 0.5% 1/16W

(ADA-44 BOARD)

Ref. No. or Q'ty	Part No.	SP	Description
R320	1-218-738-11	s	METAL, CHIP 82K 0.5% 1/16W
R321	1-218-727-11	s	METAL, CHIP 30K 0.5% 1/16W
R322	1-218-729-11	s	METAL, CHIP 36K 0.5% 1/16W
R323-330	1-216-864-11	s	METAL, CHIP 0
R331	1-216-001-00	s	METAL, CHIP 10 5% 1/10W
R332-337	1-216-313-00	s	METAL, CHIP 8.2 5% 1/10W
R351	1-216-809-11	s	METAL, CHIP 100 5% 1/16W
R352	1-216-809-11	s	METAL, CHIP 100 5% 1/16W
R353	1-216-809-11	s	METAL, CHIP 100 5% 1/16W
R354	1-216-809-11	s	METAL, CHIP 100 5% 1/16W
R355	1-218-708-11	s	METAL, CHIP 4.7K 0.5% 1/16W
R356	1-218-708-11	s	METAL, CHIP 4.7K 0.5% 1/16W
R357	1-216-667-11	s	METAL, CHIP 4.7K 0.5% 1/10W
R358	1-216-667-11	s	METAL, CHIP 4.7K 0.5% 1/10W
R359	1-218-692-11	s	METAL, CHIP 1K 0.5% 1/16W
R360	1-218-706-11	s	METAL, CHIP 3.9K 0.5% 1/16W
R361	1-218-716-11	s	METAL, CHIP 10K 0.5% 1/16W
R362	1-216-025-00	s	METAL, CHIP 100 5% 1/10W
R363	1-218-724-11	s	METAL, CHIP 22K 0.5% 1/16W
R364	1-208-814-11	s	METAL, CHIP 22K 0.5% 1/10W
R365	1-216-097-00	s	METAL, CHIP 100K 5% 1/10W
R366	1-216-809-11	s	METAL, CHIP 100 5% 1/16W
R367	1-218-881-11	s	METAL, CHIP 27K 0.5% 1/16W
R368	1-208-814-11	s	METAL, CHIP 22K 0.5% 1/10W
R369	1-216-845-11	s	METAL, CHIP 100K 5% 1/16W
R370-377	1-218-724-11	s	METAL, CHIP 22K 0.5% 1/16W
R378	1-208-806-11	s	METAL, CHIP 10K 0.5% 1/10W
R379	1-208-806-11	s	METAL, CHIP 10K 0.5% 1/10W
R380	1-208-806-11	s	METAL, CHIP 10K 0.5% 1/10W
R381	1-208-806-11	s	METAL, CHIP 10K 0.5% 1/10W
R382	1-216-073-00	s	METAL, CHIP 10K 5% 1/10W
R383	1-216-073-00	s	METAL, CHIP 10K 5% 1/10W
R384	1-216-073-00	s	METAL, CHIP 10K 5% 1/10W
R385	1-216-073-00	s	METAL, CHIP 10K 5% 1/10W
R386-397	1-218-724-11	s	METAL, CHIP 22K 0.5% 1/16W
R398	1-218-716-11	s	METAL, CHIP 10K 0.5% 1/16W
R399	1-218-724-11	s	METAL, CHIP 22K 0.5% 1/16W
R400	1-218-724-11	s	METAL, CHIP 22K 0.5% 1/16W
R401	1-216-857-11	s	METAL, CHIP 1M 5% 1/16W
R402	1-216-857-11	s	METAL, CHIP 1M 5% 1/16W
R403	1-216-857-11	s	METAL, CHIP 1M 5% 1/16W
R404	1-216-864-11	s	METAL, CHIP 0
R405	1-218-708-11	s	METAL, CHIP 4.7K 0.5% 1/16W
R406	1-218-716-11	s	METAL, CHIP 10K 0.5% 1/16W
R407	1-218-716-11	s	METAL, CHIP 10K 0.5% 1/16W
R408	1-216-833-11	s	METAL, CHIP 10K 5% 1/16W
R409	1-216-833-11	s	METAL, CHIP 10K 5% 1/16W
R410	1-216-833-11	s	METAL, CHIP 10K 5% 1/16W
R411	1-216-833-11	s	METAL, CHIP 10K 5% 1/16W
R412	1-216-857-11	s	METAL, CHIP 1M 5% 1/16W
R413	1-216-857-11	s	METAL, CHIP 1M 5% 1/16W
R414	1-216-857-11	s	METAL, CHIP 1M 5% 1/16W
R415	1-216-857-11	s	METAL, CHIP 1M 5% 1/16W
R416	1-216-851-11	s	METAL, CHIP 330K 5% 1/16W
R417	1-218-724-11	s	METAL, CHIP 22K 0.5% 1/16W
R418	1-218-724-11	s	METAL, CHIP 22K 0.5% 1/16W
R419	1-218-724-11	s	METAL, CHIP 22K 0.5% 1/16W
R420	1-218-724-11	s	METAL, CHIP 22K 0.5% 1/16W
R421	1-218-707-11	s	METAL, CHIP 4.3K 0.5% 1/16W

(ADA-44 BOARD)

Ref. No. or Q'ty	Part No.	SP	Description
R422	1-218-704-11	s	METAL, CHIP 3.3K 0.5% 1/16W
R423	1-218-704-11	s	METAL, CHIP 3.3K 0.5% 1/16W
R424	1-218-704-11	s	METAL, CHIP 3.3K 0.5% 1/16W
R425	1-218-704-11	s	METAL, CHIP 3.3K 0.5% 1/16W
R426	1-218-725-11	s	METAL, CHIP 24K 0.5% 1/16W
R427	1-216-857-11	s	METAL, CHIP 1M 5% 1/16W
R428-433	1-216-809-11	s	METAL, CHIP 100 5% 1/16W
R434	1-216-097-00	s	METAL, CHIP 100K 5% 1/10W
R435	1-216-097-00	s	METAL, CHIP 100K 5% 1/10W
R436	1-216-097-00	s	METAL, CHIP 100K 5% 1/10W
R437	1-216-041-00	s	METAL, CHIP 470 5% 1/10W
R438	1-216-817-11	s	METAL, CHIP 470 5% 1/16W
R440-445	1-216-073-00	s	METAL, CHIP 10K 5% 1/10W
R447-452	1-216-065-00	s	METAL, CHIP 4.7K 5% 1/10W
R453	1-215-469-00	s	METAL 100K 1% 1/6W
RV1	1-237-034-11	s	RES, ADJ METAL 2K
RV2	1-237-034-11	s	RES, ADJ METAL 2K
RV3	1-237-034-11	s	RES, ADJ METAL 2K
RV4	1-237-034-11	s	RES, ADJ METAL 2K
RV5	1-237-039-11	s	RES, ADJ METAL 100K
RV6	1-237-039-11	s	RES, ADJ METAL 100K
RV7	1-237-039-11	s	RES, ADJ METAL 100K
RV8	1-237-039-11	s	RES, ADJ METAL 100K
RV40	1-241-522-11	s	RES, VAR CARBON 10K
RV50	1-241-522-11	s	RES, VAR CARBON 10K
RV60	1-241-522-11	s	RES, VAR CARBON 10K
RV70	1-241-522-11	s	RES, VAR CARBON 10K
RV201	1-237-038-11	s	RES, ADJ METAL 50K
RV202	1-237-038-11	s	RES, ADJ METAL 50K
RV203	1-237-038-11	s	RES, ADJ METAL 50K
RV204	1-237-038-11	s	RES, ADJ METAL 50K
RV205	1-237-034-11	s	RES, ADJ METAL 2K
RV206	1-237-034-11	s	RES, ADJ METAL 2K
RV207	1-237-034-11	s	RES, ADJ METAL 2K
RV208	1-237-034-11	s	RES, ADJ METAL 2K
S1	1-554-355-00	s	SWITCH, TOGGLE

APR-20 BOARD

Ref. No. or Q'ty	Part No.	SP	Description
1pc	1-658-297-11	o	PRINTED CIRCUIT BOARD, APR-20
This board is included in DPR-62 board.			
C1-14	1-164-156-11	s	CERAMIC, CHIP 0.1uF 25V
IC1	8-759-079-49	s	IC TC74VHC04FS(EL)
IC2	8-759-079-61	s	IC TC74VHC74FS(EL)
IC3	8-759-079-80	s	IC TC74VHC175FS(EL)
IC4	8-759-079-80	s	IC TC74VHC175FS(EL)
IC5	8-759-186-54	s	IC TC74VHC164F
IC6	8-759-079-52	s	IC TC74VHC08FS(EL)
IC7	8-759-079-52	s	IC TC74VHC08FS(EL)
IC8	8-759-079-97	s	IC TC74VHC374FS(EL)
IC9	8-759-079-46	s	IC TC74VHC00FS(EL)
IC10	8-759-079-59	s	IC TC74VHC27FS(EL)
IC11	8-759-079-74	s	IC TC74VHC157FS(EL)
IC12	8-759-079-59	s	IC TC74VHC27FS(EL)
IC13	8-759-079-60	s	IC TC74VHC32FS(EL)
IC14	8-759-079-97	s	IC TC74VHC374FS(EL)
R1-7	1-216-805-11	s	METAL, CHIP 47 5% 1/16W

CC-66 BOARD

Ref. No. or Q'ty	Part No.	SP	Description
1pc	A-8276-932-A	o	MOUNTED CIRCUIT BOARD, CC-66
C4	1-164-227-11	s	CERAMIC, CHIP 0.022uF 10% 25V
C5	1-164-227-11	s	CERAMIC, CHIP 0.022uF 10% 25V
C6	1-164-227-11	s	CERAMIC, CHIP 0.022uF 10% 25V
C7	1-164-227-11	s	CERAMIC, CHIP 0.022uF 10% 25V
C8	1-162-970-11	s	CERAMIC, CHIP 0.01uF 10% 25V
C9	1-135-212-21	s	TANTALUM 2.2uF 10% 35V
C10	1-162-970-11	s	CERAMIC, CHIP 0.01uF 10% 25V
C11	1-135-212-21	s	TANTALUM 2.2uF 10% 35V
C12	1-162-970-11	s	CERAMIC, CHIP 0.01uF 10% 25V
C13	1-164-227-11	s	CERAMIC, CHIP 0.022uF 10% 25V
C14	1-164-227-11	s	CERAMIC, CHIP 0.022uF 10% 25V
C15	1-135-177-21	s	TANTALUM, CHIP 1uF 10% 25V
C16	1-164-227-11	s	CERAMIC, CHIP 0.022uF 10% 25V
C17	1-135-177-21	s	TANTALUM, CHIP 1uF 10% 25V
C18	1-126-390-11	s	ELECT, CHIP 22uF 20% 6.3V
C19	1-126-390-11	s	ELECT, CHIP 22uF 20% 6.3V
C20	1-135-177-21	s	TANTALUM, CHIP 1uF 10% 25V
CN451	1-566-759-11	o	CONNECTOR 4P, MALE
CN452	1-566-765-11	o	CONNECTOR 10P, MALE
CN453	1-566-766-11	o	CONNECTOR 11P, MALE
CN454	1-566-758-11	o	CONNECTOR 3P, MALE
CN455	1-566-760-11	s	CONNECTOR, ZR 5P, MALE
CN456	1-565-880-11	s	CONNECTOR 8P, MALE
CN457	1-565-884-11	o	CONNECTOR 12P, MALE
CN458	1-750-880-11	s	CONNECTOR, COAXIAL, FEMALE
D4	8-719-037-95	s	DIODE DA227TL
D5	8-719-037-95	s	DIODE DA227TL
D6	8-719-941-09	s	DIODE DAP202U
D7	8-719-941-04	s	DIODE SB007-03CP
D8	8-719-941-04	s	DIODE SB007-03CP
D9	8-719-941-09	s	DIODE DAP202U
FB2	1-543-309-21	s	BEAD, FERRITE
IC2	8-759-710-82	s	IC NJM2406F
IC3	8-759-082-61	s	IC TC4W53FU
IC4	8-759-710-82	s	IC NJM2406F
IC5	8-759-234-77	s	IC TC4S66F
IC6	8-759-030-16	s	IC MC34182M
IC10	8-759-082-61	s	IC TC4W53FU
Q1	8-729-117-31	s	TRANSISTOR 2SC4177-L5
Q3	8-729-117-31	s	TRANSISTOR 2SC4177-L5
Q4	8-729-140-63	s	TRANSISTOR 2SA1611-M5M6
Q6	8-729-117-31	s	TRANSISTOR 2SC4177-L5
Q7	8-729-140-63	s	TRANSISTOR 2SA1611-M5M6
Q8	8-729-117-31	s	TRANSISTOR 2SC4177-L5
Q9	8-729-117-31	s	TRANSISTOR 2SC4177-L5
Q10	8-729-117-31	s	TRANSISTOR 2SC4177-L5
R1	1-216-625-11	s	METAL, CHIP 82 0.5% 1/10W
R2	1-216-801-11	s	METAL, CHIP 22 5% 1/16W
R3	1-216-841-11	s	METAL, CHIP 47K 5% 1/16W
R4	1-216-801-11	s	METAL, CHIP 22 5% 1/16W
R5	1-216-829-11	s	METAL, CHIP 4.7K 5% 1/16W
R7	1-216-829-11	s	METAL, CHIP 4.7K 5% 1/16W
R8	1-216-805-11	s	METAL, CHIP 47 5% 1/16W
R9	1-216-829-11	s	METAL, CHIP 4.7K 5% 1/16W

(CC-66 BOARD)

Ref. No. or Q'ty	Part No.	SP	Description
R10	1-216-805-11	s	METAL, CHIP 47 5% 1/16W
R11	1-216-295-00	s	RES, CHIP 0
R14	1-216-805-11	s	METAL, CHIP 47 5% 1/16W
R15	1-216-841-11	s	METAL, CHIP 47K 5% 1/16W
R17	1-216-841-11	s	METAL, CHIP 47K 5% 1/16W
R18	1-218-841-11	s	METAL, CHIP 560 0.5% 1/16W
R19	1-218-837-11	s	METAL, CHIP 390 0.5% 1/16W
R20	1-218-864-11	s	METAL, CHIP 5.1K 0.5% 1/16W
R21	1-216-797-11	s	METAL, CHIP 10 5% 1/16W
R22	1-216-831-11	s	METAL, CHIP 6.8K 5% 1/16W
R23	1-216-833-11	s	METAL, CHIP 10K 5% 1/16W
R24	1-216-857-11	s	METAL, CHIP 1M 5% 1/16W
R25	1-216-845-11	s	METAL, CHIP 100K 5% 1/16W
R26	1-216-295-00	s	RES, CHIP 0
R27	1-216-295-00	s	RES, CHIP 0
R28	1-216-624-11	s	METAL, CHIP 75 0.5% 1/10W
R29	1-216-624-11	s	METAL, CHIP 75 0.5% 1/10W
R30	1-216-624-11	s	METAL, CHIP 75 0.5% 1/10W
R31	1-211-991-11	s	METAL, CHIP 82 0.5% 1/16W
R32	1-216-831-11	s	METAL, CHIP 6.8K 5% 1/16W
R33	1-216-833-11	s	METAL, CHIP 10K 5% 1/16W
R34	1-216-857-11	s	METAL, CHIP 1M 5% 1/16W
R35	1-216-845-11	s	METAL, CHIP 100K 5% 1/16W
R36	1-216-833-11	s	METAL, CHIP 10K 5% 1/16W
R37	1-216-833-11	s	METAL, CHIP 10K 5% 1/16W
R38	1-216-833-11	s	METAL, CHIP 10K 5% 1/16W
R39	1-216-833-11	s	METAL, CHIP 10K 5% 1/16W
R40	1-216-827-11	s	METAL, CHIP 3.3K 5% 1/16W
R41	1-218-868-11	s	METAL, CHIP 7.5K 0.5% 1/16W
R42	1-216-833-11	s	METAL, CHIP 10K 5% 1/16W
R43	1-216-827-11	s	METAL, CHIP 3.3K 5% 1/16W
R44	1-218-868-11	s	METAL, CHIP 7.5K 0.5% 1/16W
R46	1-216-295-00	s	RES, CHIP 0
RV1	1-241-521-11	s	RES, VAR CARBON 5K
S1	1-570-835-11	s	SWITCH, SLIDE
S2	1-570-863-11	s	SWITCH, SLIDE

CON-18 BOARD

Ref. No. or Q'ty	Part No.	SP	Description
1pc	A-8272-756-A	o	MOUNTED CIRCUIT BOARD, CON-18
CN431	1-566-760-11	s	CONNECTOR, ZR 5P, MALE

CP-260/260J BOARD

Ref. No. or Q'ty	Part No.	SP	Description
1pc	A-8276-934-A	o	MOUNTED CIRCUIT BOARD, CP-260 [for UC,SY]
	A-8276-936-A	o	MOUNTED CIRCUIT BOARD, CP-260J [for J]
C102	1-162-964-11	s	CERAMIC, CHIP 0.001uF 10% 50V
C103	1-126-403-11	s	ELECT, CHIP 3.3uF 20% 50V
C104	1-126-403-11	s	ELECT, CHIP 3.3uF 20% 50V
C105	1-164-156-11	s	CERAMIC, CHIP 0.1uF 25V
C106	1-164-156-11	s	CERAMIC, CHIP 0.1uF 25V
C112	1-162-970-11	s	CERAMIC, CHIP 0.01uF 10% 25V
C202	1-162-964-11	s	CERAMIC, CHIP 0.001uF 10% 50V
C203	1-126-403-11	s	ELECT, CHIP 3.3uF 20% 50V
C204	1-126-403-11	s	ELECT, CHIP 3.3uF 20% 50V
C205	1-135-213-21	s	TANTALUM 3.3uF 20% 25V
C206	1-163-275-11	s	CERAMIC, CHIP 0.001uF 5% 50V
C207	1-135-213-21	s	TANTALUM 3.3uF 20% 25V
C208	1-164-156-11	s	CERAMIC, CHIP 0.1uF 25V
C209	1-164-156-11	s	CERAMIC, CHIP 0.1uF 25V
C210	1-164-156-11	s	CERAMIC, CHIP 0.1uF 25V
C211	1-163-038-00	s	CERAMIC 0.1uF 25V
C212	1-162-970-11	s	CERAMIC, CHIP 0.01uF 10% 25V
C301	1-162-964-11	s	CERAMIC, CHIP 0.001uF 10% 50V
C302	1-126-403-11	s	ELECT, CHIP 3.3uF 20% 50V
C303	1-126-403-11	s	ELECT, CHIP 3.3uF 20% 50V
C304	1-164-156-11	s	CERAMIC, CHIP 0.1uF 25V
C305	1-164-156-11	s	CERAMIC, CHIP 0.1uF 25V
C312	1-162-970-11	s	CERAMIC, CHIP 0.01uF 10% 25V
C321	1-163-251-11	s	CERAMIC, CHIP 100PF 5% 50V
C322	1-162-927-11	s	CERAMIC, CHIP 100PF 5% 50V
C401	1-162-964-11	s	CERAMIC, CHIP 0.001uF 10% 50V
C402	1-126-403-11	s	ELECT, CHIP 3.3uF 20% 50V
C403	1-126-403-11	s	ELECT, CHIP 3.3uF 20% 50V
C404	1-164-156-11	s	CERAMIC, CHIP 0.1uF 25V
C405	1-164-156-11	s	CERAMIC, CHIP 0.1uF 25V
C412	1-162-970-11	s	CERAMIC, CHIP 0.01uF 10% 25V
C421	1-163-251-11	s	CERAMIC, CHIP 100PF 5% 50V
C422	1-163-251-11	s	CERAMIC, CHIP 100PF 5% 50V
C530	1-135-211-11	s	TANTALUM, CHIP 6.8uF 20% 6.3V
C531	1-135-211-11	s	TANTALUM, CHIP 6.8uF 20% 6.3V
C532	1-135-211-11	s	TANTALUM, CHIP 6.8uF 20% 6.3V
C533	1-135-216-11	s	TANTALUM, CHIP 10uF 20% 10V
C541	1-135-177-21	s	TANTALUM, CHIP 1uF 10% 25V
C542	1-163-989-11	s	CERAMIC, CHIP 0.033uF 10% 25V
C551	1-135-216-11	s	TANTALUM, CHIP 10uF 20% 10V
C552	1-135-211-11	s	TANTALUM, CHIP 6.8uF 20% 6.3V
C553	1-135-177-21	s	TANTALUM, CHIP 1uF 10% 25V
C554	1-135-211-11	s	TANTALUM, CHIP 6.8uF 20% 6.3V
C555	1-135-211-11	s	TANTALUM, CHIP 6.8uF 20% 6.3V
C556	1-135-177-21	s	TANTALUM, CHIP 1uF 10% 25V
C557	1-135-211-11	s	TANTALUM, CHIP 6.8uF 20% 6.3V
C558	1-135-211-11	s	TANTALUM, CHIP 6.8uF 20% 6.3V
C559	1-165-176-11	s	CERAMIC 0.047uF 10% 16V
C560	1-128-397-21	s	ELECT 100uF 20% 16V
C561	1-126-398-11	s	ELECT, CHIP 4.7uF 20% 35V
C562	1-135-211-11	s	TANTALUM, CHIP 6.8uF 20% 6.3V
C563	1-163-809-11	s	CERAMIC, CHIP 0.047uF 10% 25V
C564	1-128-397-21	s	ELECT 100uF 20% 16V
C565	1-135-211-11	s	TANTALUM, CHIP 6.8uF 20% 6.3V
C566	1-135-211-11	s	TANTALUM, CHIP 6.8uF 20% 6.3V

(CP-260/260J BOARD)

Ref. No. or Q'ty	Part No.	SP	Description
C567	1-135-211-11	s	TANTALUM, CHIP 6.8uF 20% 6.3V
C568	1-163-038-00	s	CERAMIC 0.1uF 25V
C569	1-126-402-11	s	ELECT, CHIP 2.2uF 20% 50V
C570	1-126-402-11	s	ELECT, CHIP 2.2uF 20% 50V
C571	1-135-216-11	s	TANTALUM, CHIP 10uF 20% 10V
C602	1-128-393-11	s	ELECT 100uF 20% 10V
C603	1-128-393-11	s	ELECT 100uF 20% 10V
C604	1-128-394-11	s	ELECT 220uF 20% 10V
C605	1-128-394-11	s	ELECT 220uF 20% 10V
C606	1-162-974-11	s	CERAMIC, CHIP 0.01uF 50V
C607	1-162-974-11	s	CERAMIC, CHIP 0.01uF 50V
C611	1-162-915-11	s	CERAMIC, CHIP 10PF 50V
C612	1-162-915-11	s	CERAMIC, CHIP 10PF 50V
C613	1-164-156-11	s	CERAMIC, CHIP 0.1uF 25V
C614	1-164-156-11	s	CERAMIC, CHIP 0.1uF 25V
C615	1-163-251-11	s	CERAMIC, CHIP 100PF 5% 50V
C616	1-163-251-11	s	CERAMIC, CHIP 100PF 5% 50V
C704	1-128-394-11	s	ELECT 220uF 20% 10V
C705	1-128-394-11	s	ELECT 220uF 20% 10V
C706	1-162-974-11	s	CERAMIC, CHIP 0.01uF 50V
C707	1-162-974-11	s	CERAMIC, CHIP 0.01uF 50V
C711	1-163-227-11	s	CERAMIC, CHIP 10PF 5% 50V
C712	1-163-227-11	s	CERAMIC, CHIP 10PF 5% 50V
C715	1-163-251-11	s	CERAMIC, CHIP 100PF 5% 50V
C716	1-162-927-11	s	CERAMIC, CHIP 100PF 5% 50V
C802	1-128-393-11	s	ELECT 100uF 20% 10V
C803	1-128-393-11	s	ELECT 100uF 20% 10V
C804	1-128-394-11	s	ELECT 220uF 20% 10V
C805	1-128-394-11	s	ELECT 220uF 20% 10V
C806	1-162-974-11	s	CERAMIC, CHIP 0.01uF 50V
C807	1-162-974-11	s	CERAMIC, CHIP 0.01uF 50V
C811	1-163-227-11	s	CERAMIC, CHIP 10PF 5% 50V
C812	1-163-227-11	s	CERAMIC, CHIP 10PF 5% 50V
C813	1-163-038-00	s	CERAMIC 0.1uF 25V
C814	1-163-038-00	s	CERAMIC 0.1uF 25V
C816	1-163-251-11	s	CERAMIC, CHIP 100PF 5% 50V
C817	1-163-251-11	s	CERAMIC, CHIP 100PF 5% 50V
C904	1-128-394-11	s	ELECT 220uF 20% 10V
C905	1-128-394-11	s	ELECT 220uF 20% 10V
C906	1-162-974-11	s	CERAMIC, CHIP 0.01uF 50V
C907	1-162-974-11	s	CERAMIC, CHIP 0.01uF 50V
C911	1-163-227-11	s	CERAMIC, CHIP 10PF 5% 50V
C912	1-163-227-11	s	CERAMIC, CHIP 10PF 5% 50V
C916	1-163-251-11	s	CERAMIC, CHIP 100PF 5% 50V
C917	1-163-251-11	s	CERAMIC, CHIP 100PF 5% 50V
C1001	1-126-394-11	s	ELECT, CHIP 10uF 20% 16V
C1002	1-163-038-00	s	CERAMIC 0.1uF 25V
C1003	1-163-137-00	s	CERAMIC, CHIP 680PF 5% 50V
C1004	1-163-251-11	s	CERAMIC, CHIP 100PF 5% 50V
C1005	1-163-038-00	s	CERAMIC 0.1uF 25V
C1024	1-164-156-11	s	CERAMIC, CHIP 0.1uF 25V [for UC,SY]
C1025	1-126-391-11	s	ELECT, CHIP 47uF 20% 6.3V
C1027	1-126-391-11	s	ELECT, CHIP 47uF 20% 6.3V
C1029	1-126-393-11	s	ELECT, CHIP 33uF 20% 10V
C1031	1-126-393-11	s	ELECT, CHIP 33uF 20% 10V
C1033	1-126-393-11	s	ELECT, CHIP 33uF 20% 10V
C1035	1-126-393-11	s	ELECT, CHIP 33uF 20% 10V
C1038	1-163-038-00	s	CERAMIC 0.1uF 25V
C1040	1-163-038-00	s	CERAMIC 0.1uF 25V

(CP-260/260J BOARD)

Ref. No. or Q'ty	Part No.	SP	Description
C1042	1-163-038-00	s	CERAMIC 0.1uF 25V
C1044	1-163-038-00	s	CERAMIC 0.1uF 25V
C1045	1-126-403-11	s	ELECT, CHIP 3.3uF 20% 50V [for UC,SY]
C1046	1-126-390-11	s	ELECT, CHIP 22uF 20% 6.3V
C1047	1-126-390-11	s	ELECT, CHIP 22uF 20% 6.3V
C1048	1-126-395-11	s	ELECT, CHIP 22uF 20% 16V
C1049	1-126-395-11	s	ELECT, CHIP 22uF 20% 16V
C2001	1-126-398-11	s	ELECT, CHIP 4.7uF 20% 35V
C2002	1-163-038-00	s	CERAMIC 0.1uF 25V
C2003	1-126-398-11	s	ELECT, CHIP 4.7uF 20% 35V
C2004	1-126-941-11	s	ELECT 470uF 20% 25V
C2005	1-126-394-11	s	ELECT, CHIP 10uF 20% 16V
C5001	1-163-251-11	s	CERAMIC, CHIP 100PF 5% 50V
C5002	1-162-927-11	s	CERAMIC, CHIP 100PF 5% 50V
C5003	1-163-251-11	s	CERAMIC, CHIP 100PF 5% 50V
C5004	1-163-251-11	s	CERAMIC, CHIP 100PF 5% 50V
CN401	1-566-767-11	o	CONNECTOR 12P, MALE
CN402	1-565-877-11	s	CONNECTOR, PC BOARD 5P, MALE
CN403	1-565-875-11	o	CONNECTOR 3P, MALE
CN404	1-565-875-11	o	CONNECTOR 3P, MALE
CN405	1-565-875-11	o	CONNECTOR 3P, MALE
CN406	1-565-875-11	o	CONNECTOR 3P, MALE
CN407	1-566-761-11	o	CONNECTOR 6P, MALE
CN408	1-566-758-11	o	CONNECTOR 3P, MALE
CN409	1-580-716-11	o	CONNECTOR 13P, MALE
CN410	1-566-767-11	o	CONNECTOR 12P, MALE
CN411	1-566-765-11	o	CONNECTOR 10P, MALE
CN412	1-580-716-11	o	CONNECTOR 13P, MALE
CN413	1-566-758-11	o	CONNECTOR 3P, MALE
CN414	1-565-875-11	o	CONNECTOR 3P, MALE
CN415	1-565-875-11	o	CONNECTOR 3P, MALE
CN416	1-565-875-11	o	CONNECTOR 3P, MALE
CN417	1-565-875-11	o	CONNECTOR 3P, MALE
CN421	1-566-759-11	o	CONNECTOR 4P, MALE
CN1009	1-537-142-11	s	TERMINAL
D101	8-719-941-23	s	DIODE DA204U
D102	8-719-941-23	s	DIODE DA204U
D201	8-719-941-23	s	DIODE DA204U
D202	8-719-941-23	s	DIODE DA204U
D301	8-719-941-23	s	DIODE DA204U
D302	8-719-941-23	s	DIODE DA204U
D401	8-719-941-23	s	DIODE DA204U
D402	8-719-941-23	s	DIODE DA204U
D601	8-719-941-86	s	DIODE DAN202U
D602	8-719-941-86	s	DIODE DAN202U
D801	8-719-941-86	s	DIODE DAN202U
D802	8-719-941-86	s	DIODE DAN202U
D1004	8-719-157-36	s	DIODE RD6.8M-B
D1005	8-719-157-23	s	DIODE RD4.7M-B
D1006	8-719-157-36	s	DIODE RD6.8M-B
D1007	8-719-157-23	s	DIODE RD4.7M-B
D1008	8-719-157-23	s	DIODE RD4.7M-B
D1009	8-719-157-36	s	DIODE RD6.8M-B
D1010	8-719-157-23	s	DIODE RD4.7M-B
D1011	8-719-157-23	s	DIODE RD4.7M-B
D1012	8-719-157-36	s	DIODE RD6.8M-B
D1013	8-719-157-23	s	DIODE RD4.7M-B

(CP-260/260J BOARD)

Ref. No. or Q'ty	Part No.	SP	Description
D1014	8-719-157-23	s	DIODE RD4.7M-B
D1015	8-719-157-36	s	DIODE RD6.8M-B
D1016	8-719-157-23	s	DIODE RD4.7M-B
IC101	8-759-711-85	s	IC NJM4580E-D(T2)
IC201	8-759-711-85	s	IC NJM4580E-D(T2)
IC202	8-759-711-85	s	IC NJM4580E-D(T2)
IC301	8-759-711-85	s	IC NJM4580E-D(T2)
IC401	8-759-711-85	s	IC NJM4580E-D(T2)
IC551	8-759-702-03	s	IC NJM072BM
IC552	8-759-701-36	s	IC NJM3403AM
IC553	8-759-512-09	s	IC NJM386BM
IC554	8-759-512-09	s	IC NJM386BM
IC601	8-759-700-96	s	IC NJM5534M
IC602	8-759-711-85	s	IC NJM4580E-D(T2)
IC603	8-759-700-96	s	IC NJM5534M
IC701	8-759-700-96	s	IC NJM5534M
IC703	8-759-700-96	s	IC NJM5534M
IC801	8-759-700-96	s	IC NJM5534M
IC802	8-759-711-85	s	IC NJM4580E-D(T2)
IC803	8-759-700-96	s	IC NJM5534M
IC901	8-759-700-96	s	IC NJM5534M
IC903	8-759-700-96	s	IC NJM5534M
IC1001	8-759-079-49	s	IC TC74VHC04FS(EL)
IC1004	8-759-079-78	s	IC TC74VHC165FS(EL)
IC1007	8-759-234-20	s	IC TC7S08F
IC2001	8-759-937-54	s	IC S-81250HG-RD-S
L101	1-410-380-31	s	INDUCTOR, CHIP 8.2uH
L102	1-410-380-31	s	INDUCTOR, CHIP 8.2uH
L201	1-410-380-31	s	INDUCTOR, CHIP 8.2uH
L202	1-410-380-31	s	INDUCTOR, CHIP 8.2uH
L203	1-410-380-31	s	INDUCTOR, CHIP 8.2uH
L204	1-410-380-31	s	INDUCTOR, CHIP 8.2uH
L301	1-410-380-31	s	INDUCTOR, CHIP 8.2uH
L302	1-410-380-31	s	INDUCTOR, CHIP 8.2uH
L401	1-410-380-31	s	INDUCTOR, CHIP 8.2uH
L402	1-410-380-31	s	INDUCTOR, CHIP 8.2uH
L1001	1-410-371-41	s	INDUCTOR CHIP 1.5uH
Q551	8-729-209-07	s	TRANSISTOR 2SC4213-B
Q601	8-729-209-07	s	TRANSISTOR 2SC4213-B
Q602	8-729-209-07	s	TRANSISTOR 2SC4213-B
Q701	8-729-209-07	s	TRANSISTOR 2SC4213-B
Q702	8-729-209-07	s	TRANSISTOR 2SC4213-B
Q801	8-729-209-07	s	TRANSISTOR 2SC4213-B
Q802	8-729-209-07	s	TRANSISTOR 2SC4213-B
Q901	8-729-209-07	s	TRANSISTOR 2SC4213-B
Q902	8-729-209-07	s	TRANSISTOR 2SC4213-B
Q1001	8-729-140-63	s	TRANSISTOR 2SA1611-M5M6
Q1002	8-729-101-07	s	TRANSISTOR 2SB798
Q1003	8-729-140-63	s	TRANSISTOR 2SA1611-M5M6 [for UC,SY]
Q1005	8-729-029-14	s	TRANSISTOR DTC144EUA-T106 [for UC,SY]
Q1006	8-729-807-87	s	TRANSISTOR 2SB1295-UL6
Q1007	8-729-809-47	s	TRANSISTOR 2SD1935-CT7
Q1008	8-729-807-87	s	TRANSISTOR 2SB1295-UL6
Q1009	8-729-809-47	s	TRANSISTOR 2SD1935-CT7
Q1010	8-729-807-87	s	TRANSISTOR 2SB1295-UL6
Q1011	8-729-809-47	s	TRANSISTOR 2SD1935-CT7

(CP-260/260J BOARD)

Ref. No. or Q'ty	Part No.	SP	Description
Q1012	8-729-807-87	s	TRANSISTOR 2SB1295-UL6
Q1013	8-729-809-47	s	TRANSISTOR 2SD1935-CT7
Q1014	8-729-807-87	s	TRANSISTOR 2SB1295-UL6
Q1015	8-729-809-47	s	TRANSISTOR 2SD1935-CT7
Q1016	8-729-117-31	s	TRANSISTOR 2SC4177-L5 [for UC,SY]
Q1017	8-729-809-47	s	TRANSISTOR 2SD1935-CT7
Q1018	8-729-807-87	s	TRANSISTOR 2SB1295-UL6
Q1019	8-729-809-47	s	TRANSISTOR 2SD1935-CT7
Q1020	8-729-807-87	s	TRANSISTOR 2SB1295-UL6
Q2001	8-729-807-51	s	TRANSISTOR 2SD1623-S
Q2002	8-729-029-06	s	TRANSISTOR DTC124EUA-T106
Q2003	8-729-028-83	s	TRANSISTOR DTA124EUA-T106
Q2004	8-729-029-06	s	TRANSISTOR DTC124EUA-T106
Q2005	8-729-028-83	s	TRANSISTOR DTA124EUA-T106
R102	1-216-624-11	s	METAL, CHIP 75 0.5% 1/10W
R103	1-211-990-11	s	METAL, CHIP 75 0.5% 1/16W
R104	1-208-814-11	s	METAL, CHIP 22K 0.5% 1/10W
R105	1-208-814-11	s	METAL, CHIP 22K 0.5% 1/10W
R108	1-218-844-11	s	METAL, CHIP 750 0.5% 1/16W
R109	1-218-844-11	s	METAL, CHIP 750 0.5% 1/16W
R111	1-216-097-00	s	METAL, CHIP 100K 5% 1/10W
R112	1-216-097-00	s	METAL, CHIP 100K 5% 1/10W
R114	1-218-883-11	s	METAL, CHIP 33K 0.5% 1/16W
R115	1-216-663-11	s	METAL, CHIP 3.3K 0.5% 1/10W
R116	1-218-704-11	s	METAL, CHIP 3.3K 0.5% 1/16W
R117	1-218-663-11	s	METAL, CHIP 62 0.5% 1/16W
R118	1-216-603-11	s	METAL, CHIP 10 0.5% 1/10W
R119	1-211-969-11	s	METAL, CHIP 10 0.5% 1/16W
R120	1-216-295-00	s	RES, CHIP 0
R127	1-216-639-11	s	METAL, CHIP 330 0.5% 1/10W
R131	1-208-814-11	s	METAL, CHIP 22K 0.5% 1/10W
R132	1-208-814-11	s	METAL, CHIP 22K 0.5% 1/10W
R133	1-208-812-11	s	METAL, CHIP 18K 0.5% 1/10W
R134	1-211-990-11	s	METAL, CHIP 75 0.5% 1/16W
R135	1-208-812-11	s	METAL, CHIP 18K 0.5% 1/10W
R136	1-208-814-11	s	METAL, CHIP 22K 0.5% 1/10W
R137	1-208-814-11	s	METAL, CHIP 22K 0.5% 1/10W
R140	1-218-840-11	s	METAL, CHIP 510 0.5% 1/16W
R141	1-218-710-11	s	METAL, CHIP 5.6K 0.5% 1/16W
R142	1-218-838-11	s	METAL, CHIP 430 0.5% 1/16W
R143	1-218-720-11	s	METAL, CHIP 15K 0.5% 1/16W
R144	1-218-710-11	s	METAL, CHIP 5.6K 0.5% 1/16W
R145	1-218-840-11	s	METAL, CHIP 510 0.5% 1/16W
R146	1-218-720-11	s	METAL, CHIP 15K 0.5% 1/16W
R147	1-218-838-11	s	METAL, CHIP 430 0.5% 1/16W
R148	1-216-673-11	s	METAL, CHIP 8.2K 0.5% 1/10W
R153	1-218-720-11	s	METAL, CHIP 15K 0.5% 1/16W
R154	1-216-864-11	s	METAL, CHIP 0
R155	1-218-720-11	s	METAL, CHIP 15K 0.5% 1/16W
R156	1-216-864-11	s	METAL, CHIP 0
R202	1-216-624-11	s	METAL, CHIP 75 0.5% 1/10W
R203	1-211-990-11	s	METAL, CHIP 75 0.5% 1/16W
R204	1-208-814-11	s	METAL, CHIP 22K 0.5% 1/10W
R205	1-208-814-11	s	METAL, CHIP 22K 0.5% 1/10W
R208	1-218-844-11	s	METAL, CHIP 750 0.5% 1/16W
R209	1-218-844-11	s	METAL, CHIP 750 0.5% 1/16W
R211	1-216-097-00	s	METAL, CHIP 100K 5% 1/10W
R212	1-216-845-11	s	METAL, CHIP 100K 5% 1/16W
R214	1-218-883-11	s	METAL, CHIP 33K 0.5% 1/16W

(CP-260/260J BOARD)

Ref. No. or Q'ty	Part No.	SP	Description
R215	1-216-663-11	s	METAL, CHIP 3.3K 0.5% 1/10W
R216	1-216-663-11	s	METAL, CHIP 3.3K 0.5% 1/10W
R217	1-218-663-11	s	METAL, CHIP 62 0.5% 1/16W
R218	1-211-969-11	s	METAL, CHIP 10 0.5% 1/16W
R219	1-211-969-11	s	METAL, CHIP 10 0.5% 1/16W
R220	1-216-864-11	s	METAL, CHIP 0
R221	1-216-061-00	s	METAL, CHIP 3.3K 5% 1/10W
R222	1-216-845-11	s	METAL, CHIP 100K 5% 1/16W
R223	1-216-845-11	s	METAL, CHIP 100K 5% 1/16W
R224	1-216-809-11	s	METAL, CHIP 100 5% 1/16W
R225	1-216-809-11	s	METAL, CHIP 100 5% 1/16W
R227	1-216-639-11	s	METAL, CHIP 330 0.5% 1/10W
R231	1-208-814-11	s	METAL, CHIP 22K 0.5% 1/10W
R232	1-208-814-11	s	METAL, CHIP 22K 0.5% 1/10W
R233	1-208-812-11	s	METAL, CHIP 18K 0.5% 1/10W
R234	1-211-990-11	s	METAL, CHIP 75 0.5% 1/16W
R235	1-208-812-11	s	METAL, CHIP 18K 0.5% 1/10W
R236	1-208-814-11	s	METAL, CHIP 22K 0.5% 1/10W
R237	1-208-814-11	s	METAL, CHIP 22K 0.5% 1/10W
R240	1-218-840-11	s	METAL, CHIP 510 0.5% 1/16W
R241	1-218-710-11	s	METAL, CHIP 5.6K 0.5% 1/16W
R242	1-218-838-11	s	METAL, CHIP 430 0.5% 1/16W
R243	1-218-720-11	s	METAL, CHIP 15K 0.5% 1/16W
R244	1-218-710-11	s	METAL, CHIP 5.6K 0.5% 1/16W
R245	1-218-840-11	s	METAL, CHIP 510 0.5% 1/16W
R246	1-218-720-11	s	METAL, CHIP 15K 0.5% 1/16W
R247	1-218-838-11	s	METAL, CHIP 430 0.5% 1/16W
R248	1-216-673-11	s	METAL, CHIP 8.2K 0.5% 1/10W
R253	1-218-720-11	s	METAL, CHIP 15K 0.5% 1/16W
R254	1-216-864-11	s	METAL, CHIP 0
R255	1-218-720-11	s	METAL, CHIP 15K 0.5% 1/16W
R256	1-216-864-11	s	METAL, CHIP 0
R301	1-211-990-11	s	METAL, CHIP 75 0.5% 1/16W
R302	1-211-990-11	s	METAL, CHIP 75 0.5% 1/16W
R303	1-208-814-11	s	METAL, CHIP 22K 0.5% 1/10W
R304	1-218-844-11	s	METAL, CHIP 750 0.5% 1/16W
R305	1-208-814-11	s	METAL, CHIP 22K 0.5% 1/10W
R306	1-218-844-11	s	METAL, CHIP 750 0.5% 1/16W
R308	1-216-097-00	s	METAL, CHIP 100K 5% 1/10W
R309	1-216-845-11	s	METAL, CHIP 100K 5% 1/16W
R310	1-216-639-11	s	METAL, CHIP 330 0.5% 1/10W
R311	1-218-883-11	s	METAL, CHIP 33K 0.5% 1/16W
R312	1-216-663-11	s	METAL, CHIP 3.3K 0.5% 1/10W
R313	1-216-663-11	s	METAL, CHIP 3.3K 0.5% 1/10W
R314	1-216-622-11	s	METAL, CHIP 62 0.5% 1/10W
R315	1-216-603-11	s	METAL, CHIP 10 0.5% 1/10W
R316	1-216-603-11	s	METAL, CHIP 10 0.5% 1/10W
R317	1-216-624-11	s	METAL, CHIP 75 0.5% 1/10W
R320	1-218-840-11	s	METAL, CHIP 510 0.5% 1/16W
R321	1-218-710-11	s	METAL, CHIP 5.6K 0.5% 1/16W
R322	1-218-838-11	s	METAL, CHIP 430 0.5% 1/16W
R323	1-218-720-11	s	METAL, CHIP 15K 0.5% 1/16W
R324	1-218-710-11	s	METAL, CHIP 5.6K 0.5% 1/16W
R325	1-218-840-11	s	METAL, CHIP 510 0.5% 1/16W
R326	1-218-720-11	s	METAL, CHIP 15K 0.5% 1/16W
R327	1-218-838-11	s	METAL, CHIP 430 0.5% 1/16W
R328	1-216-673-11	s	METAL, CHIP 8.2K 0.5% 1/10W
R330	1-216-864-11	s	METAL, CHIP 0
R331	1-208-814-11	s	METAL, CHIP 22K 0.5% 1/10W

(CP-260/260J BOARD)

Ref. No. or Q'ty	Part No.	SP	Description
R332	1-208-814-11	s	METAL, CHIP 22K 0.5% 1/10W
R333	1-208-812-11	s	METAL, CHIP 18K 0.5% 1/10W
R334	1-218-720-11	s	METAL, CHIP 15K 0.5% 1/16W
R335	1-208-812-11	s	METAL, CHIP 18K 0.5% 1/10W
R336	1-208-814-11	s	METAL, CHIP 22K 0.5% 1/10W
R337	1-208-814-11	s	METAL, CHIP 22K 0.5% 1/10W
R338	1-218-720-11	s	METAL, CHIP 15K 0.5% 1/16W
R354	1-216-864-11	s	METAL, CHIP 0
R356	1-216-864-11	s	METAL, CHIP 0
R401	1-211-990-11	s	METAL, CHIP 75 0.5% 1/16W
R402	1-211-990-11	s	METAL, CHIP 75 0.5% 1/16W
R403	1-208-814-11	s	METAL, CHIP 22K 0.5% 1/10W
R404	1-218-844-11	s	METAL, CHIP 750 0.5% 1/16W
R405	1-208-814-11	s	METAL, CHIP 22K 0.5% 1/10W
R406	1-218-844-11	s	METAL, CHIP 750 0.5% 1/16W
R408	1-216-097-00	s	METAL, CHIP 100K 5% 1/10W
R409	1-216-097-00	s	METAL, CHIP 100K 5% 1/10W
R410	1-216-639-11	s	METAL, CHIP 330 0.5% 1/10W
R411	1-218-883-11	s	METAL, CHIP 33K 0.5% 1/16W
R412	1-216-663-11	s	METAL, CHIP 3.3K 0.5% 1/10W
R413	1-216-663-11	s	METAL, CHIP 3.3K 0.5% 1/10W
R414	1-218-663-11	s	METAL, CHIP 62 0.5% 1/16W
R415	1-211-969-11	s	METAL, CHIP 10 0.5% 1/16W
R416	1-211-969-11	s	METAL, CHIP 10 0.5% 1/16W
R417	1-211-990-11	s	METAL, CHIP 75 0.5% 1/16W
R420	1-218-840-11	s	METAL, CHIP 510 0.5% 1/16W
R421	1-218-710-11	s	METAL, CHIP 5.6K 0.5% 1/16W
R422	1-218-838-11	s	METAL, CHIP 430 0.5% 1/16W
R423	1-218-720-11	s	METAL, CHIP 15K 0.5% 1/16W
R424	1-218-710-11	s	METAL, CHIP 5.6K 0.5% 1/16W
R425	1-218-840-11	s	METAL, CHIP 510 0.5% 1/16W
R426	1-218-720-11	s	METAL, CHIP 15K 0.5% 1/16W
R427	1-218-838-11	s	METAL, CHIP 430 0.5% 1/16W
R428	1-216-673-11	s	METAL, CHIP 8.2K 0.5% 1/10W
R430	1-216-864-11	s	METAL, CHIP 0
R431	1-208-814-11	s	METAL, CHIP 22K 0.5% 1/10W
R432	1-208-814-11	s	METAL, CHIP 22K 0.5% 1/10W
R433	1-208-812-11	s	METAL, CHIP 18K 0.5% 1/10W
R434	1-218-720-11	s	METAL, CHIP 15K 0.5% 1/16W
R435	1-208-812-11	s	METAL, CHIP 18K 0.5% 1/10W
R436	1-208-814-11	s	METAL, CHIP 22K 0.5% 1/10W
R437	1-208-814-11	s	METAL, CHIP 22K 0.5% 1/10W
R438	1-218-720-11	s	METAL, CHIP 15K 0.5% 1/16W
R454	1-216-864-11	s	METAL, CHIP 0
R456	1-216-864-11	s	METAL, CHIP 0
R530	1-208-806-11	s	METAL, CHIP 10K 0.5% 1/10W
R531	1-208-806-11	s	METAL, CHIP 10K 0.5% 1/10W
R532	1-216-089-00	s	METAL, CHIP 47K 5% 1/10W
R533	1-216-663-11	s	METAL, CHIP 3.3K 0.5% 1/10W
R534	1-216-821-11	s	METAL, CHIP 1K 5% 1/16W
R541	1-216-073-00	s	METAL, CHIP 10K 5% 1/10W
R542	1-216-295-00	s	RES, CHIP 0
R545	1-216-295-00	s	RES, CHIP 0
R548	1-216-864-11	s	METAL, CHIP 0
R551	1-208-806-11	s	METAL, CHIP 10K 0.5% 1/10W
R552	1-208-806-11	s	METAL, CHIP 10K 0.5% 1/10W
R553	1-208-806-11	s	METAL, CHIP 10K 0.5% 1/10W
R554	1-208-806-11	s	METAL, CHIP 10K 0.5% 1/10W
R555	1-216-849-11	s	METAL, CHIP 220K 5% 1/16W

(CP-260/260J BOARD)

Ref. No. or Q'ty	Part No.	SP	Description
R556	1-218-716-11	s	METAL, CHIP 10K 0.5% 1/16W
R558	1-216-864-11	s	METAL, CHIP 0
R561	1-216-662-11	s	METAL, CHIP 3K 0.5% 1/10W
R562	1-216-667-11	s	METAL, CHIP 4.7K 0.5% 1/10W
R563	1-216-662-11	s	METAL, CHIP 3K 0.5% 1/10W
R564	1-216-667-11	s	METAL, CHIP 4.7K 0.5% 1/10W
R567-574	1-216-864-11	s	METAL, CHIP 0
R575	1-208-806-11	s	METAL, CHIP 10K 0.5% 1/10W
R576	1-208-806-11	s	METAL, CHIP 10K 0.5% 1/10W
R577	1-216-651-11	s	METAL, CHIP 1K 0.5% 1/10W
R578	1-216-089-00	s	METAL, CHIP 47K 5% 1/10W
R579	1-216-667-11	s	METAL, CHIP 4.7K 0.5% 1/10W
R580	1-218-756-11	s	METAL, CHIP 150K 0.5% 1/10W
R581	1-208-823-11	s	METAL, CHIP 51K 0.5% 1/10W
R582	1-216-651-11	s	METAL, CHIP 1K 0.5% 1/10W
R583	1-216-089-00	s	METAL, CHIP 47K 5% 1/10W
R584	1-218-708-11	s	METAL, CHIP 4.7K 0.5% 1/16W
R585	1-218-756-11	s	METAL, CHIP 150K 0.5% 1/10W
R586	1-218-733-11	s	METAL, CHIP 51K 0.5% 1/16W
R588	1-216-797-11	s	METAL, CHIP 10 5% 1/16W
R589	1-216-089-00	s	METAL, CHIP 47K 5% 1/10W
R591	1-216-001-00	s	METAL, CHIP 10 5% 1/10W
R592	1-216-089-00	s	METAL, CHIP 47K 5% 1/10W
R593	1-208-800-11	s	METAL, CHIP 5.6K 0.5% 1/10W
R594	1-208-800-11	s	METAL, CHIP 5.6K 0.5% 1/10W
R595	1-216-667-11	s	METAL, CHIP 4.7K 0.5% 1/10W
R596	1-216-699-11	s	METAL, CHIP 100K 0.5% 1/10W
R597	1-216-809-11	s	METAL, CHIP 100 5% 1/16W
R598	1-216-833-11	s	METAL, CHIP 10K 5% 1/16W
R603	1-218-700-11	s	METAL, CHIP 2.2K 0.5% 1/16W
R604	1-218-700-11	s	METAL, CHIP 2.2K 0.5% 1/16W
R605	1-218-868-11	s	METAL, CHIP 7.5K 0.5% 1/16W
R606	1-218-700-11	s	METAL, CHIP 2.2K 0.5% 1/16W
R607	1-218-868-11	s	METAL, CHIP 7.5K 0.5% 1/16W
R608	1-218-700-11	s	METAL, CHIP 2.2K 0.5% 1/16W
R609	1-218-672-11	s	METAL, CHIP 150 0.5% 1/16W
R610	1-218-677-11	s	METAL, CHIP 240 0.5% 1/16W
R611	1-218-868-11	s	METAL, CHIP 7.5K 0.5% 1/16W
R612	1-218-868-11	s	METAL, CHIP 7.5K 0.5% 1/16W
R613	1-216-803-11	s	METAL, CHIP 33 5% 1/16W
R614	1-216-803-11	s	METAL, CHIP 33 5% 1/16W
R615	1-216-073-00	s	METAL, CHIP 10K 5% 1/10W
R616	1-216-073-00	s	METAL, CHIP 10K 5% 1/10W
R617	1-216-067-00	s	METAL, CHIP 5.6K 5% 1/10W
R619	1-216-067-00	s	METAL, CHIP 5.6K 5% 1/10W
R620	1-216-667-11	s	METAL, CHIP 4.7K 0.5% 1/10W
R621	1-216-667-11	s	METAL, CHIP 4.7K 0.5% 1/10W
R622	1-216-667-11	s	METAL, CHIP 4.7K 0.5% 1/10W
R625	1-216-667-11	s	METAL, CHIP 4.7K 0.5% 1/10W
R630	1-208-774-11	s	METAL, CHIP 470 0.5% 1/10W
R632	1-218-836-11	s	METAL, CHIP 360 0.5% 1/16W
R633	1-218-692-11	s	METAL, CHIP 1K 0.5% 1/16W
R634	1-216-611-11	s	METAL, CHIP 22 0.5% 1/10W
R703	1-216-659-11	s	METAL, CHIP 2.2K 0.5% 1/10W
R704	1-216-659-11	s	METAL, CHIP 2.2K 0.5% 1/10W
R705	1-208-803-11	s	METAL, CHIP 7.5K 0.5% 1/10W
R706	1-216-659-11	s	METAL, CHIP 2.2K 0.5% 1/10W
R707	1-208-803-11	s	METAL, CHIP 7.5K 0.5% 1/10W
R708	1-216-659-11	s	METAL, CHIP 2.2K 0.5% 1/10W

(CP-260/260J BOARD)

Ref. No. or Q'ty	Part No.	SP	Description
R709	1-216-631-11	s	METAL, CHIP 150 0.5% 1/10W
R710	1-208-767-11	s	METAL, CHIP 240 0.5% 1/10W
R711	1-208-803-11	s	METAL, CHIP 7.5K 0.5% 1/10W
R712	1-208-803-11	s	METAL, CHIP 7.5K 0.5% 1/10W
R713	1-216-013-00	s	METAL, CHIP 33 5% 1/10W
R714	1-216-013-00	s	METAL, CHIP 33 5% 1/10W
R715	1-216-073-00	s	METAL, CHIP 10K 5% 1/10W
R716	1-216-073-00	s	METAL, CHIP 10K 5% 1/10W
R717	1-216-067-00	s	METAL, CHIP 5.6K 5% 1/10W
R718	1-216-067-00	s	METAL, CHIP 5.6K 5% 1/10W
R720	1-216-667-11	s	METAL, CHIP 4.7K 0.5% 1/10W
R721	1-216-667-11	s	METAL, CHIP 4.7K 0.5% 1/10W
R722	1-216-667-11	s	METAL, CHIP 4.7K 0.5% 1/10W
R725	1-218-708-11	s	METAL, CHIP 4.7K 0.5% 1/16W
R730	1-218-684-11	s	METAL, CHIP 470 0.5% 1/16W
R732	1-218-836-11	s	METAL, CHIP 360 0.5% 1/16W
R733	1-218-692-11	s	METAL, CHIP 1K 0.5% 1/16W
R734	1-211-977-11	s	METAL, CHIP 22 0.5% 1/16W
R803	1-216-659-11	s	METAL, CHIP 2.2K 0.5% 1/10W
R804	1-216-659-11	s	METAL, CHIP 2.2K 0.5% 1/10W
R805	1-208-803-11	s	METAL, CHIP 7.5K 0.5% 1/10W
R806	1-216-659-11	s	METAL, CHIP 2.2K 0.5% 1/10W
R807	1-208-803-11	s	METAL, CHIP 7.5K 0.5% 1/10W
R808	1-216-659-11	s	METAL, CHIP 2.2K 0.5% 1/10W
R809	1-216-631-11	s	METAL, CHIP 150 0.5% 1/10W
R810	1-208-767-11	s	METAL, CHIP 240 0.5% 1/10W
R811	1-208-803-11	s	METAL, CHIP 7.5K 0.5% 1/10W
R812	1-208-803-11	s	METAL, CHIP 7.5K 0.5% 1/10W
R813	1-216-013-00	s	METAL, CHIP 33 5% 1/10W
R814	1-216-803-11	s	METAL, CHIP 33 5% 1/16W
R815	1-216-833-11	s	METAL, CHIP 10K 5% 1/16W
R816	1-216-833-11	s	METAL, CHIP 10K 5% 1/16W
R817	1-216-067-00	s	METAL, CHIP 5.6K 5% 1/10W
R818	1-216-067-00	s	METAL, CHIP 5.6K 5% 1/10W
R820	1-216-667-11	s	METAL, CHIP 4.7K 0.5% 1/10W
R821	1-216-667-11	s	METAL, CHIP 4.7K 0.5% 1/10W
R822	1-216-667-11	s	METAL, CHIP 4.7K 0.5% 1/10W
R825	1-216-667-11	s	METAL, CHIP 4.7K 0.5% 1/10W
R830	1-208-774-11	s	METAL, CHIP 470 0.5% 1/10W
R832	1-208-771-11	s	METAL, CHIP 360 0.5% 1/10W
R833	1-216-651-11	s	METAL, CHIP 1K 0.5% 1/10W
R834	1-216-611-11	s	METAL, CHIP 22 0.5% 1/10W
R903	1-216-659-11	s	METAL, CHIP 2.2K 0.5% 1/10W
R904	1-216-659-11	s	METAL, CHIP 2.2K 0.5% 1/10W
R905	1-208-803-11	s	METAL, CHIP 7.5K 0.5% 1/10W
R906	1-218-700-11	s	METAL, CHIP 2.2K 0.5% 1/16W
R907	1-208-803-11	s	METAL, CHIP 7.5K 0.5% 1/10W
R908	1-216-659-11	s	METAL, CHIP 2.2K 0.5% 1/10W
R909	1-216-631-11	s	METAL, CHIP 150 0.5% 1/10W
R910	1-208-767-11	s	METAL, CHIP 240 0.5% 1/10W
R911	1-208-803-11	s	METAL, CHIP 7.5K 0.5% 1/10W
R912	1-208-803-11	s	METAL, CHIP 7.5K 0.5% 1/10W
R913	1-216-013-00	s	METAL, CHIP 33 5% 1/10W
R914	1-216-013-00	s	METAL, CHIP 33 5% 1/10W
R915	1-216-833-11	s	METAL, CHIP 10K 5% 1/16W
R916	1-216-833-11	s	METAL, CHIP 10K 5% 1/16W
R917	1-216-067-00	s	METAL, CHIP 5.6K 5% 1/10W
R918	1-216-067-00	s	METAL, CHIP 5.6K 5% 1/10W
R920	1-216-667-11	s	METAL, CHIP 4.7K 0.5% 1/10W

(CP-260/260J BOARD)

Ref. No. or Q'ty	Part No.	SP	Description
R921	1-216-667-11	s	METAL, CHIP 4.7K 0.5% 1/10W
R922	1-216-667-11	s	METAL, CHIP 4.7K 0.5% 1/10W
R925	1-216-667-11	s	METAL, CHIP 4.7K 0.5% 1/10W
R930	1-208-774-11	s	METAL, CHIP 470 0.5% 1/10W
R932	1-208-771-11	s	METAL, CHIP 360 0.5% 1/10W
R933	1-216-651-11	s	METAL, CHIP 1K 0.5% 1/10W
R934	1-216-611-11	s	METAL, CHIP 22 0.5% 1/10W
R1001	1-216-789-11	s	METAL, CHIP 2.2 5% 1/16W
R1002	1-216-821-11	s	METAL, CHIP 1K 5% 1/16W
R1003	1-216-835-11	s	METAL, CHIP 15K 5% 1/16W
R1004	1-216-073-00	s	METAL, CHIP 10K 5% 1/10W
R1005	1-216-097-00	s	METAL, CHIP 100K 5% 1/10W
R1006	1-216-097-00	s	METAL, CHIP 100K 5% 1/10W
R1007	1-216-097-00	s	METAL, CHIP 100K 5% 1/10W
R1008	1-216-097-00	s	METAL, CHIP 100K 5% 1/10W
R1014	1-216-864-11	s	METAL, CHIP 0
R1015	1-216-825-11	s	METAL, CHIP 2.2K 5% 1/16W [for UC,SY]
R1016	1-216-845-11	s	METAL, CHIP 100K 5% 1/16W [for UC,SY]
R1018	1-216-065-00	s	METAL, CHIP 4.7K 5% 1/10W
R1019	1-216-065-00	s	METAL, CHIP 4.7K 5% 1/10W
R1020	1-216-065-00	s	METAL, CHIP 4.7K 5% 1/10W
R1021	1-216-065-00	s	METAL, CHIP 4.7K 5% 1/10W
R1022	1-216-073-00	s	METAL, CHIP 10K 5% 1/10W
R1023	1-216-073-00	s	METAL, CHIP 10K 5% 1/10W
R1024	1-216-073-00	s	METAL, CHIP 10K 5% 1/10W
R1025	1-216-065-00	s	METAL, CHIP 4.7K 5% 1/10W
R1026	1-216-073-00	s	METAL, CHIP 10K 5% 1/10W
R1027	1-216-073-00	s	METAL, CHIP 10K 5% 1/10W
R1028	1-216-073-00	s	METAL, CHIP 10K 5% 1/10W
R1029	1-216-065-00	s	METAL, CHIP 4.7K 5% 1/10W
R1030	1-216-845-11	s	METAL, CHIP 100K 5% 1/16W
R1031	1-216-845-11	s	METAL, CHIP 100K 5% 1/16W
R1032	1-216-097-00	s	METAL, CHIP 100K 5% 1/10W
R1033	1-216-097-00	s	METAL, CHIP 100K 5% 1/10W
R1034	1-216-073-00	s	METAL, CHIP 10K 5% 1/10W
R1035	1-216-070-00	s	METAL, CHIP 7.5K 5% 1/10W
R1036	1-216-073-00	s	METAL, CHIP 10K 5% 1/10W
R1037	1-216-065-00	s	METAL, CHIP 4.7K 5% 1/10W
R1038	1-216-073-00	s	METAL, CHIP 10K 5% 1/10W
R1039	1-216-070-00	s	METAL, CHIP 7.5K 5% 1/10W
R1040	1-216-073-00	s	METAL, CHIP 10K 5% 1/10W
R1041	1-216-065-00	s	METAL, CHIP 4.7K 5% 1/10W
R1042-1047	1-216-097-00	s	METAL, CHIP 100K 5% 1/10W
R1048	1-216-295-00	s	RES, CHIP 0
R1050	1-216-825-11	s	METAL, CHIP 2.2K 5% 1/16W [for UC,SY]
R1051	1-216-041-00	s	METAL, CHIP 470 5% 1/10W
R1052	1-216-041-00	s	METAL, CHIP 470 5% 1/10W
R1053	1-216-817-11	s	METAL, CHIP 470 5% 1/16W
R1054	1-216-817-11	s	METAL, CHIP 470 5% 1/16W
R2001	1-216-065-00	s	METAL, CHIP 4.7K 5% 1/10W
R2002	1-216-089-00	s	METAL, CHIP 47K 5% 1/10W
RV551	1-241-264-11	s	RES, ADJ, CERMET 10K

(CP-260/260J BOARD)

Ref. No. or Q'ty	Part No.	SP	Description
S401	1-570-835-11	s	SWITCH, SLIDE
S402	1-570-845-11	s	SWITCH, SLIDE
S403	1-570-845-11	s	SWITCH, SLIDE
S404-408	1-570-863-11	s	SWITCH, SLIDE
S409	1-570-853-11	s	SWITCH, SLIDE
S410	1-570-863-11	s	SWITCH, SLIDE
S411	1-570-863-11	s	SWITCH, SLIDE
S412	1-570-863-11	s	SWITCH, SLIDE [for UC,SY]
S413	1-570-863-11	s	SWITCH, SLIDE [for UC,SY]
S414	1-570-863-11	s	SWITCH, SLIDE [for UC,SY]
S415	1-570-863-11	s	SWITCH, SLIDE [for UC,SY]
S416	1-571-217-11	s	SWITCH, SLIDE
S417	1-571-217-11	s	SWITCH, SLIDE
S418	1-571-217-11	s	SWITCH, SLIDE
S419	1-571-217-11	s	SWITCH, SLIDE
S420	1-571-087-11	s	SWITCH, SLIDE
S421	1-571-087-11	s	SWITCH, SLIDE
S422	1-571-087-11	s	SWITCH, SLIDE
S423	1-571-087-11	s	SWITCH, SLIDE
S424	1-570-853-11	s	SWITCH, SLIDE

CS-25 BOARD

Ref. No. or Q'ty	Part No.	SP	Description
1pc	1-638-701-12	o	PRINTED CIRCUIT BOARD, CS-25
CN1	1-564-013-11	o	CONNECTOR 3P, MALE
PD3	8-719-939-05	s	PHOTOINTERRUPTER GP-1S54
R4	1-247-827-11	s	CARBON 680 5% 1/4W
R5	1-247-871-11	s	CARBON 47K 5% 1/4W

CS-26 BOARD

Ref. No. or Q'ty	Part No.	SP	Description
7pcs	1-564-831-11	o	CONTACT, FEMALE
1pc	1-569-193-11	o	CONTACT, FEMALE
1pc	1-638-702-11	o	PRINTED CIRCUIT BOARD, CS-26
CN2	1-564-013-11	o	CONNECTOR 3P, MALE
CN957	1-569-200-21	o	HOUSING 7P
PD1	8-719-939-05	s	PHOTOINTERRUPTER GP-1S54
PD2	8-719-939-05	s	PHOTOINTERRUPTER GP-1S54
R1	1-249-413-11	s	CARBON 470 5% 1/4W
R2	1-247-871-11	s	CARBON 47K 5% 1/4W
R3	1-247-871-11	s	CARBON 47K 5% 1/4W

DC-85 BOARD

Ref. No. or Q'ty	Part No.	SP	Description
1pc	1-658-773-11	o	PRINTED CIRCUIT BOARD, DC-85
CN1	1-565-875-11	o	CONNECTOR 3P, MALE
CN2	1-565-875-11	o	CONNECTOR 3P, MALE

DET-15 BOARD

Ref. No. or Q'ty	Part No.	SP	Description
1pc	1-638-705-12	o	PRINTED CIRCUIT BOARD, DET-15
CN1	1-506-482-11	s	CONNECTOR 3P, MALE
PD1	8-719-939-05	s	PHOTOINTERRUPTER GP-1S54
R1	1-249-409-11	s	CARBON 220 5% 1/4W
R2	1-247-847-11	s	CARBON 4.7K 5% 1/4W

DET-26 BOARD

Ref. No. or Q'ty	Part No.	SP	Description
1pc	A-8276-926-A	o	MOUNTED CIRCUIT BOARD, DET-26
CN1	1-506-469-11	s	CONNECTOR 4P, MALE
PD1	8-719-988-15	s	PHTO REFLECTOR PR-11-C
PD2	8-719-988-15	s	PHTO REFLECTOR PR-11-C
Q1	8-729-117-32	s	TRANSISTOR 2SC4177
Q2	8-729-117-32	s	TRANSISTOR 2SC4177
R1	1-216-049-11	s	METAL, CHIP 1K 5% 1/10W
R2	1-216-109-00	s	METAL, CHIP 330K 5% 1/10W
R3	1-216-109-00	s	METAL, CHIP 330K 5% 1/10W

DIF-31 BOARD

Ref. No. or Q'ty	Part No.	SP	Description
1pc	A-8276-928-A	o	MOUNTED CIRCUIT BOARD, DIF-31
C100	1-164-156-11	s	CERAMIC, CHIP 0.1uF 25V
C105	1-162-907-11	s	CERAMIC, CHIP 2PF 50V
C107-120	1-164-156-11	s	CERAMIC, CHIP 0.1uF 25V
C121	1-163-121-00	s	CERAMIC, CHIP 150PF 5% 50V
C122	1-164-217-11	s	CERAMIC, CHIP 150PF 5% 50V
C123	1-104-823-11	s	TANTALUM, CHIP 47uF 20% 16V
C124	1-107-826-11	s	CERAMIC, CHIP 0.1uF 10% 16V
C129	1-107-826-11	s	CERAMIC, CHIP 0.1uF 10% 16V
C300	1-107-826-11	s	CERAMIC, CHIP 0.1uF 10% 16V
C301	1-164-156-11	s	CERAMIC, CHIP 0.1uF 25V
C302	1-164-156-11	s	CERAMIC, CHIP 0.1uF 25V
C303	1-107-826-11	s	CERAMIC, CHIP 0.1uF 10% 16V
C304	1-164-156-11	s	CERAMIC, CHIP 0.1uF 25V
C305	1-164-156-11	s	CERAMIC, CHIP 0.1uF 25V
C306	1-164-156-11	s	CERAMIC, CHIP 0.1uF 25V
C307	1-164-363-11	s	CERAMIC, CHIP 560PF 5% 50V
C308	1-162-923-11	s	CERAMIC, CHIP 47PF 5% 50V
C309	1-162-923-11	s	CERAMIC, CHIP 47PF 5% 50V
C310	1-164-156-11	s	CERAMIC, CHIP 0.1uF 25V
C311	1-104-823-11	s	TANTALUM, CHIP 47uF 20% 16V
C312	1-104-823-11	s	TANTALUM, CHIP 47uF 20% 16V
C313	1-107-826-11	s	CERAMIC, CHIP 0.1uF 10% 16V
C314	1-135-159-21	s	TANTALUM, CHIP 10uF 10% 20V
C315-319	1-164-156-11	s	CERAMIC, CHIP 0.1uF 25V
C321	1-164-156-11	s	CERAMIC, CHIP 0.1uF 25V
C346	1-164-156-11	s	CERAMIC, CHIP 0.1uF 25V
C348	1-164-156-11	s	CERAMIC, CHIP 0.1uF 25V
C349	1-164-156-11	s	CERAMIC, CHIP 0.1uF 25V
C350	1-165-128-11	s	CERAMIC, CHIP 0.22uF 16V
C351	1-165-128-11	s	CERAMIC, CHIP 0.22uF 16V
C352-356	1-164-156-11	s	CERAMIC, CHIP 0.1uF 25V
C357-362	1-104-823-11	s	TANTALUM, CHIP 47uF 20% 16V
C364	1-164-156-11	s	CERAMIC, CHIP 0.1uF 25V
C365	1-161-485-00	s	CERAMIC 0.1uF 50V
C370	1-135-159-21	s	TANTALUM, CHIP 10uF 10% 20V
C500-504	1-164-156-11	s	CERAMIC, CHIP 0.1uF 25V
C505	1-104-823-11	s	TANTALUM, CHIP 47uF 20% 16V
C506	1-104-823-11	s	TANTALUM, CHIP 47uF 20% 16V
C507	1-104-823-11	s	TANTALUM, CHIP 47uF 20% 16V
C508	1-164-156-11	s	CERAMIC, CHIP 0.1uF 25V
C509	1-164-156-11	s	CERAMIC, CHIP 0.1uF 25V
C510	1-164-156-11	s	CERAMIC, CHIP 0.1uF 25V
C511	1-164-156-11	s	CERAMIC, CHIP 0.1uF 25V
C512	1-104-823-11	s	TANTALUM, CHIP 47uF 20% 16V
C513	1-104-823-11	s	TANTALUM, CHIP 47uF 20% 16V
CN205	1-750-667-11	s	CONNECTOR, BOARD TO BOARD 100P
CN251	1-750-880-11	s	CONNECTOR, COAXIAL, FEMALE
CN252	1-750-880-11	s	CONNECTOR, COAXIAL, FEMALE
CN253	1-750-880-11	s	CONNECTOR, COAXIAL, FEMALE
CN254	1-750-880-11	s	CONNECTOR, COAXIAL, FEMALE
D1	8-719-912-20	s	DIODE ISS120
D200	8-719-157-36	s	DIODE RD6.8M-B
FB300-305	1-543-309-21	s	BEAD, FERRITE
FB310	1-543-309-21	s	BEAD, FERRITE

(DIF-31 BOARD)

Ref. No. or Q'ty	Part No.	SP	Description
IC100	8-759-079-94	s	IC TC74VHC368FS(EL)
IC101	8-759-080-06	s	IC TC74VHC574FS(EL)
IC102	8-759-080-06	s	IC TC74VHC574FS(EL)
IC104	8-759-080-03	s	IC TC74VHCT541FS(EL)
IC105	8-759-147-05	s	IC UPD42101G-3
IC106	8-759-147-05	s	IC UPD42101G-3
IC107	8-759-519-12	s	IC CXD8281Q
IC108	8-759-172-73	s	IC CXD8385Q
IC110	8-741-601-11	s	IC SBX1601A
IC300	8-759-054-61	s	IC CLC505AJE
IC301	8-741-602-03	s	IC SBX1602A
IC302	8-759-079-49	s	IC TC74VHC04FS(EL)
IC303	8-759-079-52	s	IC TC74VHC08FS(EL)
IC304	8-759-079-60	s	IC TC74VHC32FS(EL)
IC305	8-759-172-72	s	IC CXD8386AQ
IC306	8-759-079-94	s	IC TC74VHC368FS(EL)
IC308	8-759-079-61	s	IC TC74VHC74FS(EL)
IC309	8-759-080-06	s	IC TC74VHC574FS(EL)
IC310	8-759-080-06	s	IC TC74VHC574FS(EL)
IC311	8-759-080-06	s	IC TC74VHC574FS(EL)
IC312	8-759-289-69	s	IC CXD8280AQ
IC313	8-759-186-32	s	TC74VHC21F
IC500	8-759-079-87	s	IC TC74VHC245FS(EL)
IC501	8-759-079-70	s	IC TC74VHC138FS(EL)
IC502	8-759-233-56	s	IC TC74HC688AF
IC503	8-759-079-49	s	IC TC74VHC04FS(EL)
IC504	8-759-079-60	s	IC TC74VHC32FS(EL)
IC505	8-759-079-61	s	IC TC74VHC74FS(EL)
IC506	8-759-079-60	s	IC TC74VHC32FS(EL)
IC508	8-759-080-06	s	IC TC74VHC574FS(EL)
IC511	8-759-079-69	s	IC TC74VHC132FS(EL)
L100	1-410-733-11	s	INDUCTOR CHIP 0.22uH
Q100	8-729-120-28	s	TRANSISTOR 2SC1623-L5L6
Q101	8-729-143-46	s	TRANSISTOR 2SC3356-R24
Q102	8-729-143-46	s	TRANSISTOR 2SC3356-R24
Q103	8-729-143-46	s	TRANSISTOR 2SC3356-R24
Q104	8-729-420-74	s	TRANSISTOR 2SD1328-RST
Q300	8-729-143-46	s	TRANSISTOR 2SC3356-R24
Q301	8-729-120-28	s	TRANSISTOR 2SC1623-L5L6
Q302	8-729-216-22	s	TRANSISTOR 2SA1162
Q303	8-729-120-28	s	TRANSISTOR 2SC1623-L5L6
Q306	8-729-420-74	s	TRANSISTOR 2SD1328-RST
Q307-328	8-729-024-56	s	TRANSISTOR 2SA1808-P
Q330	8-729-420-74	s	TRANSISTOR 2SD1328-RST
Q500	8-729-807-51	s	TRANSISTOR 2SD1623-S
Q501	8-729-101-07	s	TRANSISTOR 2SB798
R102	1-216-864-11	s	METAL, CHIP 0
R114-119	1-216-864-11	s	METAL, CHIP 0
R130	1-216-864-11	s	METAL, CHIP 0
R131	1-216-864-11	s	METAL, CHIP 0
R132	1-218-676-11	s	METAL, CHIP 220 0.5% 1/16W
R133	1-218-676-11	s	METAL, CHIP 220 0.5% 1/16W
R134	1-218-676-11	s	METAL, CHIP 220 0.5% 1/16W
R137	1-216-864-11	s	METAL, CHIP 0
R138	1-216-864-11	s	METAL, CHIP 0
R141	1-216-864-11	s	METAL, CHIP 0
R143-149	1-216-864-11	s	METAL, CHIP 0

(DIF-31 BOARD)

Ref. No. or Q'ty	Part No.	SP	Description
R159	1-216-864-11	s	METAL, CHIP 0
R160	1-216-864-11	s	METAL, CHIP 0
R161	1-216-864-11	s	METAL, CHIP 0
R175	1-216-864-11	s	METAL, CHIP 0
R181	1-216-864-11	s	METAL, CHIP 0
R182	1-216-864-11	s	METAL, CHIP 0
R188	1-216-864-11	s	METAL, CHIP 0
R191-195	1-216-864-11	s	METAL, CHIP 0
R213-218	1-216-864-11	s	METAL, CHIP 0
R230	1-216-839-11	s	METAL, CHIP 33K 5% 1/16W
R231	1-216-836-11	s	METAL, CHIP 18K 5% 1/16W
R232	1-216-839-11	s	METAL, CHIP 33K 5% 1/16W
R233	1-216-836-11	s	METAL, CHIP 18K 5% 1/16W
R235	1-218-676-11	s	METAL, CHIP 220 0.5% 1/16W
R236	1-218-668-11	s	METAL, CHIP 100 0.5% 1/16W
R237	1-218-676-11	s	METAL, CHIP 220 0.5% 1/16W
R238	1-218-881-11	s	METAL, CHIP 27K 0.5% 1/16W
R239	1-211-981-11	s	METAL, CHIP 33 0.5% 1/16W
R240	1-218-692-11	s	METAL, CHIP 1K 0.5% 1/16W
R241	1-211-990-11	s	METAL, CHIP 75 0.5% 1/16W
R243	1-211-991-11	s	METAL, CHIP 82 0.5% 1/16W
R242	1-211-981-11	s	METAL, CHIP 33 0.5% 1/16W
R244	1-218-672-11	s	METAL, CHIP 150 0.5% 1/16W
R245	1-218-692-11	s	METAL, CHIP 1K 0.5% 1/16W
R246	1-218-664-11	s	METAL, CHIP 68 0.5% 1/16W
R247	1-216-864-11	s	METAL, CHIP 0
R300	1-218-692-11	s	METAL, CHIP 1K 0.5% 1/16W
R301	1-211-991-11	s	METAL, CHIP 82 0.5% 1/16W
R302	1-211-990-11	s	METAL, CHIP 75 0.5% 1/16W
R303	1-211-990-11	s	METAL, CHIP 75 0.5% 1/16W
R304	1-218-834-11	s	METAL, CHIP 300 0.5% 1/16W
R305	1-218-692-11	s	METAL, CHIP 1K 0.5% 1/16W
R306	1-218-692-11	s	METAL, CHIP 1K 0.5% 1/16W
R307	1-218-692-11	s	METAL, CHIP 1K 0.5% 1/16W
R308	1-218-829-11	s	METAL, CHIP 180 0.5% 1/16W
R309	1-216-864-11	s	METAL, CHIP 0
R310	1-218-702-11	s	METAL, CHIP 2.7K 0.5% 1/16W
R311	1-218-708-11	s	METAL, CHIP 4.7K 0.5% 1/16W
R312	1-218-725-11	s	METAL, CHIP 24K 0.5% 1/16W
R313	1-218-740-11	s	METAL, CHIP 100K 0.5% 1/16W
R314	1-218-741-11	s	METAL, CHIP 110K 0.5% 1/16W
R315	1-218-732-11	s	METAL, CHIP 47K 0.5% 1/16W
R316	1-211-991-11	s	METAL, CHIP 82 0.5% 1/16W
R317	1-218-724-11	s	METAL, CHIP 22K 0.5% 1/16W
R318	1-218-732-11	s	METAL, CHIP 47K 0.5% 1/16W
R319	1-218-716-11	s	METAL, CHIP 10K 0.5% 1/16W
R320	1-218-692-11	s	METAL, CHIP 1K 0.5% 1/16W
R321	1-218-700-11	s	METAL, CHIP 2.2K 0.5% 1/16W
R324	1-218-733-11	s	METAL, CHIP 51K 0.5% 1/16W
R325	1-218-296-11	s	METAL, CHIP 75K 5% 1/16W
R326	1-218-740-11	s	METAL, CHIP 100K 0.5% 1/16W
R334	1-218-716-11	s	METAL, CHIP 10K 0.5% 1/16W
R337	1-218-660-11	s	METAL, CHIP 47 0.5% 1/16W
R338	1-218-829-11	s	METAL, CHIP 180 0.5% 1/16W
R344-349	1-218-660-11	s	METAL, CHIP 47 0.5% 1/16W
R350-355	1-218-833-11	s	METAL, CHIP 270 0.5% 1/16W
R361-365	1-218-660-11	s	METAL, CHIP 47 0.5% 1/16W
R366-370	1-218-833-11	s	METAL, CHIP 270 0.5% 1/16W
R374-380	1-216-864-11	s	METAL, CHIP 0

(DIF-31 BOARD)

Ref. No. or Q'ty	Part No.	SP	Description
R382	1-216-864-11	s	METAL, CHIP 0
R383	1-216-864-11	s	METAL, CHIP 0
R384	1-216-864-11	s	METAL, CHIP 0
R387	1-216-864-11	s	METAL, CHIP 0
R389	1-216-864-11	s	METAL, CHIP 0
R391	1-216-864-11	s	METAL, CHIP 0
R397	1-216-864-11	s	METAL, CHIP 0
R398	1-216-864-11	s	METAL, CHIP 0
R403	1-216-864-11	s	METAL, CHIP 0
R411	1-216-864-11	s	METAL, CHIP 0
R419	1-216-845-11	s	METAL, CHIP 100K 5% 1/16W
R420	1-216-845-11	s	METAL, CHIP 100K 5% 1/16W
R422	1-216-864-11	s	METAL, CHIP 0
R432	1-216-825-11	s	METAL, CHIP 2.2K 5% 1/16W
R433	1-218-873-11	s	METAL, CHIP 12K 0.5% 1/16W
R434	1-216-854-11	s	METAL, CHIP 560K 5% 1/16W
R435	1-218-724-11	s	METAL, CHIP 22K 0.5% 1/16W
R436	1-216-864-11	s	METAL, CHIP 0
R437	1-216-813-11	s	METAL, CHIP 220 5% 1/16W
R439	1-216-864-11	s	METAL, CHIP 0
R444	1-216-864-11	s	METAL, CHIP 0
R446	1-216-864-11	s	METAL, CHIP 0
R448	1-216-864-11	s	METAL, CHIP 0
R450	1-216-864-11	s	METAL, CHIP 0
R451	1-216-864-11	s	METAL, CHIP 0
R452	1-216-864-11	s	METAL, CHIP 0
R455	1-216-864-11	s	METAL, CHIP 0
R456	1-216-864-11	s	METAL, CHIP 0
R500	1-216-864-11	s	METAL, CHIP 0
R502	1-216-864-11	s	METAL, CHIP 0
R504	1-216-841-11	s	METAL, CHIP 47K 5% 1/16W
R507	1-216-809-11	s	METAL, CHIP 100 5% 1/16W
R515	1-216-845-11	s	METAL, CHIP 100K 5% 1/16W
R516	1-216-845-11	s	METAL, CHIP 100K 5% 1/16W
R517	1-216-829-11	s	METAL, CHIP 4.7K 5% 1/16W
R518	1-216-818-11	s	METAL, CHIP 560 5% 1/16W
R519	1-216-829-11	s	METAL, CHIP 4.7K 5% 1/16W
R520	1-218-840-11	s	METAL, CHIP 510 0.5% 1/16W
RB100	1-239-407-11	s	NETWORK RESISTOR (CHIP) 330
RB102	1-239-389-11	s	NETWORK RESISTOR (CHIP) 47K
RB103	1-239-407-11	s	NETWORK RESISTOR (CHIP) 330
RB105	1-239-389-11	s	NETWORK RESISTOR (CHIP) 47K
RB106	1-239-407-11	s	NETWORK RESISTOR (CHIP) 330
RB107	1-239-407-11	s	NETWORK RESISTOR (CHIP) 330
RB108	1-239-389-11	s	NETWORK RESISTOR (CHIP) 47K
RB111	1-239-416-11	s	NETWORK RESISTOR (CHIP) 220
RB112	1-239-416-11	s	NETWORK RESISTOR (CHIP) 220
RB300	1-239-389-11	s	NETWORK RESISTOR (CHIP) 47K
RB301	1-239-711-11	s	NETWORK RESISTOR (CHIP) 0
RB310	1-239-423-11	s	NETWORK RESISTOR (CHIP) 1.2K
RB311	1-239-423-11	s	NETWORK RESISTOR (CHIP) 1.2K
RB312	1-239-423-11	s	NETWORK RESISTOR (CHIP) 1.2K
RB500	1-239-412-11	s	NETWORK RESISTOR (CHIP) 100
RB501	1-239-412-11	s	NETWORK RESISTOR (CHIP) 100
RB502	1-239-412-11	s	NETWORK RESISTOR (CHIP) 100
RV100	1-237-036-11	s	RES, ADJ METAL 10K
RV300	1-237-036-11	s	RES, ADJ METAL 10K

(DIF-31 BOARD)

Ref. No. or Q'ty	Part No.	SP	Description
S300	1-692-881-21	s	SWITCH, SLIDE

DPR-62/62P BOARD

Ref. No. or Q'ty	Part No.	SP	Description
1pc	A-8276-944-A	o	MOUNTED CIRCUIT BOARD, DPR-62 [for NTSC]
	A-8276-946-A	o	MOUNTED CIRCUIT BOARD, DPR-62P [for PAL]
This board include APR-20 board.			
C1	1-164-156-11	s	CERAMIC, CHIP 0.1uF 25V
C2	1-128-391-11	s	ELECT 330uF 20% 6.3V
C4	1-164-156-11	s	CERAMIC, CHIP 0.1uF 25V
C7-12	1-164-156-11	s	CERAMIC, CHIP 0.1uF 25V
C13	1-126-396-11	s	ELECT, CHIP 47uF 20% 16V
C14	1-126-392-11	s	ELECT, CHIP 100uF 20% 6.3V
C15	1-110-985-11	s	ELECT 0.0012F 20% 6.3V
C16	1-128-391-11	s	ELECT 330uF 20% 6.3V
C17	1-128-391-11	s	ELECT 330uF 20% 6.3V
C18	1-126-396-11	s	ELECT, CHIP 47uF 20% 16V
C19-24	1-164-156-11	s	CERAMIC, CHIP 0.1uF 25V
C27	1-164-156-11	s	CERAMIC, CHIP 0.1uF 25V
C28	1-110-985-11	s	ELECT 0.0012F 20% 6.3V
C100	1-164-156-11	s	CERAMIC, CHIP 0.1uF 25V
C105	1-164-156-11	s	CERAMIC, CHIP 0.1uF 25V
C110	1-164-156-11	s	CERAMIC, CHIP 0.1uF 25V
C111	1-164-156-11	s	CERAMIC, CHIP 0.1uF 25V
C113	1-164-156-11	s	CERAMIC, CHIP 0.1uF 25V
C114	1-162-927-11	s	CERAMIC, CHIP 100PF 5% 50V
C115	1-135-091-00	s	TANTALUM, CHIP 1uF 20% 16V
C116	1-164-156-11	s	CERAMIC, CHIP 0.1uF 25V
C117	1-164-156-11	s	CERAMIC, CHIP 0.1uF 25V
C120	1-164-156-11	s	CERAMIC, CHIP 0.1uF 25V
C121	1-126-392-11	s	ELECT, CHIP 100uF 20% 6.3V
C123	1-164-156-11	s	CERAMIC, CHIP 0.1uF 25V
C124	1-164-156-11	s	CERAMIC, CHIP 0.1uF 25V
C128	1-164-156-11	s	CERAMIC, CHIP 0.1uF 25V
C130	1-164-156-11	s	CERAMIC, CHIP 0.1uF 25V
C200	1-126-412-11	s	ELECT, CHIP 220uF 20% 4V
C201	1-164-156-11	s	CERAMIC, CHIP 0.1uF 25V
C202	1-164-156-11	s	CERAMIC, CHIP 0.1uF 25V
C203	1-164-156-11	s	CERAMIC, CHIP 0.1uF 25V
C204	1-126-412-11	s	ELECT, CHIP 220uF 20% 4V
C205-210	1-164-156-11	s	CERAMIC, CHIP 0.1uF 25V
C211	1-126-392-11	s	ELECT, CHIP 100uF 20% 6.3V
C212	1-135-210-11	s	TANTALUM, CHIP 4.7uF 20% 10V [for PAL]
C213	1-164-156-11	s	CERAMIC, CHIP 0.1uF 25V
C217	1-135-091-00	s	TANTALUM, CHIP 1uF 20% 16V
C219	1-164-156-11	s	CERAMIC, CHIP 0.1uF 25V
C221	1-164-156-11	s	CERAMIC, CHIP 0.1uF 25V
C225	1-164-156-11	s	CERAMIC, CHIP 0.1uF 25V
C229	1-164-156-11	s	CERAMIC, CHIP 0.1uF 25V
C232	1-164-156-11	s	CERAMIC, CHIP 0.1uF 25V
C235	1-135-138-11	s	TANTALUM 10uF 20% 25V [for NTSC]
	1-135-167-21	s	TANTALUM, CHIP 68uF 20% 6.3V [for PAL]
C238	1-135-138-11	s	TANTALUM 10uF 20% 25V [for NTSC]
	1-135-167-21	s	TANTALUM, CHIP 68uF 20% 6.3V [for PAL]
C239	1-164-156-11	s	CERAMIC, CHIP 0.1uF 25V
C240	1-126-392-11	s	ELECT, CHIP 100uF 20% 6.3V
C300-313	1-164-156-11	s	CERAMIC, CHIP 0.1uF 25V

(DPR-62/62P BOARD)

Ref. No. or Q'ty	Part No.	SP	Description
C334	1-164-156-11	s	CERAMIC, CHIP 0.1uF 25V
C336	1-164-156-11	s	CERAMIC, CHIP 0.1uF 25V
C338	1-126-394-11	s	ELECT, CHIP 10uF 20% 16V
C339	1-164-156-11	s	CERAMIC, CHIP 0.1uF 25V
C340	1-164-156-11	s	CERAMIC, CHIP 0.1uF 25V
C341	1-164-156-11	s	CERAMIC, CHIP 0.1uF 25V
C342	1-162-964-11	s	CERAMIC, CHIP 0.001uF 10% 50V
C343	1-164-156-11	s	CERAMIC, CHIP 0.1uF 25V
C344	1-164-156-11	s	CERAMIC, CHIP 0.1uF 25V
C347	1-164-156-11	s	CERAMIC, CHIP 0.1uF 25V
C348	1-164-156-11	s	CERAMIC, CHIP 0.1uF 25V
C350	1-164-156-11	s	CERAMIC, CHIP 0.1uF 25V
C351	1-164-156-11	s	CERAMIC, CHIP 0.1uF 25V
C352	1-164-156-11	s	CERAMIC, CHIP 0.1uF 25V
C353	1-164-156-11	s	CERAMIC, CHIP 0.1uF 25V
C355	1-164-156-11	s	CERAMIC, CHIP 0.1uF 25V
C356	1-164-156-11	s	CERAMIC, CHIP 0.1uF 25V
C360	1-164-004-11	s	CERAMIC, CHIP 0.1uF 10% 25V
C500	1-164-156-11	s	CERAMIC, CHIP 0.1uF 25V
C501	1-164-156-11	s	CERAMIC, CHIP 0.1uF 25V
C502	1-164-156-11	s	CERAMIC, CHIP 0.1uF 25V
C504	1-164-156-11	s	CERAMIC, CHIP 0.1uF 25V
C505	1-164-156-11	s	CERAMIC, CHIP 0.1uF 25V
C507	1-164-156-11	s	CERAMIC, CHIP 0.1uF 25V
C508	1-164-156-11	s	CERAMIC, CHIP 0.1uF 25V
C510	1-164-156-11	s	CERAMIC, CHIP 0.1uF 25V
C512	1-164-156-11	s	CERAMIC, CHIP 0.1uF 25V
C513	1-162-915-11	s	CERAMIC, CHIP 10PF 50V
C514	1-162-915-11	s	CERAMIC, CHIP 10PF 50V
C515	1-164-156-11	s	CERAMIC, CHIP 0.1uF 25V
C600-606	1-164-156-11	s	CERAMIC, CHIP 0.1uF 25V
C608	1-164-156-11	s	CERAMIC, CHIP 0.1uF 25V
C610	1-164-156-11	s	CERAMIC, CHIP 0.1uF 25V
C612	1-164-156-11	s	CERAMIC, CHIP 0.1uF 25V
C700-723	1-164-156-11	s	CERAMIC, CHIP 0.1uF 25V
C800	1-164-156-11	s	CERAMIC, CHIP 0.1uF 25V
C801	1-164-156-11	s	CERAMIC, CHIP 0.1uF 25V
C804	1-164-156-11	s	CERAMIC, CHIP 0.1uF 25V
C805	1-164-156-11	s	CERAMIC, CHIP 0.1uF 25V
C812	1-164-156-11	s	CERAMIC, CHIP 0.1uF 25V
C814	1-164-156-11	s	CERAMIC, CHIP 0.1uF 25V
C816	1-164-156-11	s	CERAMIC, CHIP 0.1uF 25V
C818	1-164-156-11	s	CERAMIC, CHIP 0.1uF 25V
C820	1-164-156-11	s	CERAMIC, CHIP 0.1uF 25V
C822	1-164-156-11	s	CERAMIC, CHIP 0.1uF 25V
C824	1-164-156-11	s	CERAMIC, CHIP 0.1uF 25V
C826	1-164-156-11	s	CERAMIC, CHIP 0.1uF 25V
C828	1-164-156-11	s	CERAMIC, CHIP 0.1uF 25V
C830	1-164-156-11	s	CERAMIC, CHIP 0.1uF 25V
C832	1-164-156-11	s	CERAMIC, CHIP 0.1uF 25V
C834	1-164-156-11	s	CERAMIC, CHIP 0.1uF 25V
C836	1-164-156-11	s	CERAMIC, CHIP 0.1uF 25V
C839-846	1-164-156-11	s	CERAMIC, CHIP 0.1uF 25V
C901	1-164-156-11	s	CERAMIC, CHIP 0.1uF 25V
C903	1-164-156-11	s	CERAMIC, CHIP 0.1uF 25V
C905	1-164-156-11	s	CERAMIC, CHIP 0.1uF 25V
C907	1-164-156-11	s	CERAMIC, CHIP 0.1uF 25V
C909	1-164-156-11	s	CERAMIC, CHIP 0.1uF 25V
C911	1-164-156-11	s	CERAMIC, CHIP 0.1uF 25V

(DPR-62/62P BOARD)

Ref. No. or Q'ty	Part No.	SP	Description
C913	1-164-156-11	s	CERAMIC, CHIP 0.1uF 25V
C915	1-164-156-11	s	CERAMIC, CHIP 0.1uF 25V
C917	1-164-156-11	s	CERAMIC, CHIP 0.1uF 25V
C919	1-164-156-11	s	CERAMIC, CHIP 0.1uF 25V
C1000	1-162-915-11	s	CERAMIC, CHIP 10PF 50V
C1001	1-162-915-11	s	CERAMIC, CHIP 10PF 50V
C1002	1-162-915-11	s	CERAMIC, CHIP 10PF 50V
C1003	1-164-156-11	s	CERAMIC, CHIP 0.1uF 25V
C1004	1-162-915-11	s	CERAMIC, CHIP 10PF 50V
C1005	1-164-156-11	s	CERAMIC, CHIP 0.1uF 25V
C1006	1-162-915-11	s	CERAMIC, CHIP 10PF 50V
C1007	1-164-156-11	s	CERAMIC, CHIP 0.1uF 25V
C1008	1-162-915-11	s	CERAMIC, CHIP 10PF 50V
C1009	1-164-489-11	s	CERAMIC, CHIP 0.22uF 10% 16V
C1010	1-164-489-11	s	CERAMIC, CHIP 0.22uF 10% 16V
C1011-1015	1-164-156-11	s	CERAMIC, CHIP 0.1uF 25V
C1018	1-164-156-11	s	CERAMIC, CHIP 0.1uF 25V
C1019	1-164-156-11	s	CERAMIC, CHIP 0.1uF 25V
C1100	1-162-964-11	s	CERAMIC, CHIP 0.001uF 10% 50V
C1101	1-135-215-21	s	TANTALUM, CHIP 6.8uF 10% 16V
C1102-1109	1-164-156-11	s	CERAMIC, CHIP 0.1uF 25V
C1110	1-162-921-11	s	CERAMIC, CHIP 33PF 5% 50V
C1111	1-162-921-11	s	CERAMIC, CHIP 33PF 5% 50V
C1112-1121	1-164-156-11	s	CERAMIC, CHIP 0.1uF 25V
C1122	1-162-925-11	s	CERAMIC, CHIP 68PF 5% 50V
C1123	1-162-925-11	s	CERAMIC, CHIP 68PF 5% 50V
C1124	1-162-925-11	s	CERAMIC, CHIP 68PF 5% 50V
C1125	1-162-925-11	s	CERAMIC, CHIP 68PF 5% 50V
C1126	1-162-918-11	s	CERAMIC, CHIP 18PF 5% 50V
C1127	1-162-918-11	s	CERAMIC, CHIP 18PF 5% 50V
C1128-1133	1-164-156-11	s	CERAMIC, CHIP 0.1uF 25V
C1134-1141	1-162-957-11	s	CERAMIC, CHIP 220PF 5% 50V
C1142-1146	1-164-156-11	s	CERAMIC, CHIP 0.1uF 25V
C1147	1-135-215-21	s	TANTALUM, CHIP 6.8uF 10% 16V
C1148	1-162-967-11	s	CERAMIC, CHIP 0.0033uF 10% 50V
C1149	1-162-967-11	s	CERAMIC, CHIP 0.0033uF 10% 50V
C1150-1154	1-164-156-11	s	CERAMIC, CHIP 0.1uF 25V
C1155	1-162-995-11	s	CERAMIC, CHIP 0.022uF 50V
C1156	1-162-995-11	s	CERAMIC, CHIP 0.022uF 50V
C1157	1-164-156-11	s	CERAMIC, CHIP 0.1uF 25V
C1158	1-162-921-11	s	CERAMIC, CHIP 33PF 5% 50V
C1159	1-162-921-11	s	CERAMIC, CHIP 33PF 5% 50V
C1160	1-162-995-11	s	CERAMIC, CHIP 0.022uF 50V
C1161	1-162-995-11	s	CERAMIC, CHIP 0.022uF 50V
C1162	1-164-156-11	s	CERAMIC, CHIP 0.1uF 25V
C1163	1-164-156-11	s	CERAMIC, CHIP 0.1uF 25V
C1200	1-164-156-11	s	CERAMIC, CHIP 0.1uF 25V
C1202	1-164-156-11	s	CERAMIC, CHIP 0.1uF 25V
C1204	1-164-156-11	s	CERAMIC, CHIP 0.1uF 25V
C1206	1-164-156-11	s	CERAMIC, CHIP 0.1uF 25V

(DPR-62/62P BOARD)

Ref. No. or Q'ty	Part No.	SP	Description
C1208	1-164-156-11	s	CERAMIC, CHIP 0.1uF 25V
C1210	1-164-156-11	s	CERAMIC, CHIP 0.1uF 25V
C1212	1-164-156-11	s	CERAMIC, CHIP 0.1uF 25V
C1214	1-164-156-11	s	CERAMIC, CHIP 0.1uF 25V
C1216	1-164-156-11	s	CERAMIC, CHIP 0.1uF 25V
C1218	1-164-156-11	s	CERAMIC, CHIP 0.1uF 25V
C1220	1-164-156-11	s	CERAMIC, CHIP 0.1uF 25V
C1222	1-164-156-11	s	CERAMIC, CHIP 0.1uF 25V
C1224	1-164-156-11	s	CERAMIC, CHIP 0.1uF 25V
C1226	1-164-156-11	s	CERAMIC, CHIP 0.1uF 25V
C1228	1-164-156-11	s	CERAMIC, CHIP 0.1uF 25V
C1230	1-164-156-11	s	CERAMIC, CHIP 0.1uF 25V
C1300	1-164-156-11	s	CERAMIC, CHIP 0.1uF 25V
C1301	1-164-156-11	s	CERAMIC, CHIP 0.1uF 25V
C1302	1-164-156-11	s	CERAMIC, CHIP 0.1uF 25V
C1303	1-164-156-11	s	CERAMIC, CHIP 0.1uF 25V
C1304	1-162-927-11	s	CERAMIC, CHIP 100PF 5% 50V [for PAL]
C1305	1-162-921-11	s	CERAMIC, CHIP 33PF 5% 50V
C1306	1-162-919-11	s	CERAMIC, CHIP 22PF 5% 50V [for NTSC]
C1307	1-162-957-11	s	CERAMIC, CHIP 220PF 5% 50V
C1308	1-164-156-11	s	CERAMIC, CHIP 0.1uF 25V [for PAL]
C1309	1-164-156-11	s	CERAMIC, CHIP 0.1uF 25V
C1310	1-162-970-11	s	CERAMIC, CHIP 0.01uF 10% 25V
C1311	1-104-547-11	s	FILM, CHIP 0.0047uF 5% 16V [for PAL]
C1312	1-164-156-11	s	CERAMIC, CHIP 0.1uF 25V
C1313	1-164-315-11	s	CERAMIC, CHIP 470PF 5% 50V
C1314	1-162-957-11	s	CERAMIC, CHIP 220PF 5% 50V
C1315	1-164-156-11	s	CERAMIC, CHIP 0.1uF 25V
C1316	1-104-547-11	s	FILM, CHIP 0.0047uF 5% 16V [for PAL]
C1317	1-162-957-11	s	CERAMIC, CHIP 220PF 5% 50V
C1318	1-164-315-11	s	CERAMIC, CHIP 470PF 5% 50V [for NTSC]
C1319	1-135-161-21	s	TANTALUM, CHIP 22uF 10% 10V [for NTSC]
C1320	1-164-156-11	s	CERAMIC, CHIP 0.1uF 25V
C1321	1-135-161-21	s	TANTALUM, CHIP 22uF 10% 10V [for NTSC]
C1323	1-162-970-11	s	CERAMIC, CHIP 0.01uF 10% 25V
C1324	1-164-156-11	s	CERAMIC, CHIP 0.1uF 25V
C1326	1-135-085-21	s	TANTALUM, CHIP 4.7uF 20% 25V [for PAL]
C1327	1-164-156-11	s	CERAMIC, CHIP 0.1uF 25V
C1328	1-135-085-21	s	TANTALUM, CHIP 4.7uF 20% 25V [for PAL]
C1329	1-104-559-11	s	FILM, CHIP 0.047uF 5% 16V
C1330	1-164-156-11	s	CERAMIC, CHIP 0.1uF 25V
C1331	1-164-156-11	s	CERAMIC, CHIP 0.1uF 25V
C1332	1-164-315-11	s	CERAMIC, CHIP 470PF 5% 50V
C1333	1-126-392-11	s	ELECT, CHIP 100uF 20% 6.3V
C1334	1-164-156-11	s	CERAMIC, CHIP 0.1uF 25V
C1336	1-162-911-11	s	CERAMIC, CHIP 6PF 50V
C1337	1-162-907-11	s	CERAMIC, CHIP 2PF 50V
C1338	1-162-921-11	s	CERAMIC, CHIP 33PF 5% 50V

(DPR-62/62P BOARD)

Ref. No. or Q'ty	Part No.	SP	Description
C1339	1-162-921-11	s	CERAMIC, CHIP 33PF 5% 50V
C1340	1-164-156-11	s	CERAMIC, CHIP 0.1uF 25V [for PAL]
C1341	1-164-156-11	s	CERAMIC, CHIP 0.1uF 25V [for PAL]
C1342	1-164-156-11	s	CERAMIC, CHIP 0.1uF 25V
C1343	1-164-156-11	s	CERAMIC, CHIP 0.1uF 25V
C1344	1-164-489-11	s	CERAMIC, CHIP 0.22uF 10% 16V
C1345	1-135-179-21	s	TANTALUM 2.2uF 10% 16V
C1346	1-164-156-11	s	CERAMIC, CHIP 0.1uF 25V
C1347	1-164-156-11	s	CERAMIC, CHIP 0.1uF 25V
C1348	1-164-156-11	s	CERAMIC, CHIP 0.1uF 25V
C1350	1-164-156-11	s	CERAMIC, CHIP 0.1uF 25V
C1351	1-164-156-11	s	CERAMIC, CHIP 0.1uF 25V
C1353	1-164-156-11	s	CERAMIC, CHIP 0.1uF 25V
C1355	1-162-919-11	s	CERAMIC, CHIP 22PF 5% 50V
C1356	1-164-156-11	s	CERAMIC, CHIP 0.1uF 25V
C1358	1-164-156-11	s	CERAMIC, CHIP 0.1uF 25V
C1359	1-162-919-11	s	CERAMIC, CHIP 22PF 5% 50V
C1360	1-164-156-11	s	CERAMIC, CHIP 0.1uF 25V
C1361	1-164-156-11	s	CERAMIC, CHIP 0.1uF 25V
C1362	1-162-927-11	s	CERAMIC, CHIP 100PF 5% 50V
C1363-1369	1-164-156-11	s	CERAMIC, CHIP 0.1uF 25V
C1370	1-126-392-11	s	ELECT, CHIP 100uF 20% 6.3V
C1371	1-164-156-11	s	CERAMIC, CHIP 0.1uF 25V
C1372	1-164-156-11	s	CERAMIC, CHIP 0.1uF 25V
C1373	1-162-925-11	s	CERAMIC, CHIP 68PF 5% 50V
C1374	1-162-957-11	s	CERAMIC, CHIP 220PF 5% 50V
C1375	1-162-925-11	s	CERAMIC, CHIP 68PF 5% 50V
C1376	1-164-156-11	s	CERAMIC, CHIP 0.1uF 25V
C1377	1-164-156-11	s	CERAMIC, CHIP 0.1uF 25V
C1378	1-164-156-11	s	CERAMIC, CHIP 0.1uF 25V
C1379	1-164-156-11	s	CERAMIC, CHIP 0.1uF 25V
C1380	1-164-218-11	s	CERAMIC, CHIP 180PF 50V [for NTSC]
C1381	1-164-156-11	s	CERAMIC, CHIP 0.1uF 25V
C1382	1-164-156-11	s	CERAMIC, CHIP 0.1uF 25V [for PAL]
C1383	1-162-928-11	s	CERAMIC, CHIP 120PF 5% 50V [for NTSC]
	1-164-217-11	s	CERAMIC 150PF 5% 50V [for PAL]
C1384	1-164-156-11	s	CERAMIC, CHIP 0.1uF 25V [for PAL]
C1385	1-164-156-11	s	CERAMIC, CHIP 0.1uF 25V
C1386	1-164-156-11	s	CERAMIC, CHIP 0.1uF 25V
C1387	1-164-156-11	s	CERAMIC, CHIP 0.1uF 25V [for PAL]
C1388	1-126-392-11	s	ELECT, CHIP 100uF 20% 6.3V [for PAL]
C1389	1-164-156-11	s	CERAMIC, CHIP 0.1uF 25V [for PAL]
C1390	1-164-156-11	s	CERAMIC, CHIP 0.1uF 25V
C1391	1-162-925-11	s	CERAMIC, CHIP 68PF 5% 50V [for PAL]
C1392	1-162-957-11	s	CERAMIC, CHIP 220PF 5% 50V [for PAL]
C1393	1-162-964-11	s	CERAMIC, CHIP 0.001uF 10% 50V
C1394	1-162-925-11	s	CERAMIC, CHIP 68PF 5% 50V [for PAL]
C1395	1-126-394-11	s	ELECT, CHIP 10uF 20% 16V
C1396	1-164-156-11	s	CERAMIC, CHIP 0.1uF 25V [for PAL]
C1397	1-164-156-11	s	CERAMIC, CHIP 0.1uF 25V
C1398	1-164-156-11	s	CERAMIC, CHIP 0.1uF 25V [for PAL]
C1399	1-164-156-11	s	CERAMIC, CHIP 0.1uF 25V [for PAL]
C1400	1-164-156-11	s	CERAMIC, CHIP 0.1uF 25V
C1401	1-126-392-11	s	ELECT, CHIP 100uF 20% 6.3V
C1402	1-164-156-11	s	CERAMIC, CHIP 0.1uF 25V

(DPR-62/62P BOARD)

Ref. No. or Q'ty	Part No.	SP	Description
C1403	1-164-156-11	s	CERAMIC, CHIP 0.1uF 25V
C1404	1-162-963-11	s	CERAMIC, CHIP 680PF 10% 50V
C1405	1-162-927-11	s	CERAMIC, CHIP 100PF 5% 50V
C1406	1-164-156-11	s	CERAMIC, CHIP 0.1uF 25V
C1408	1-164-156-11	s	CERAMIC, CHIP 0.1uF 25V
C1410	1-162-927-11	s	CERAMIC, CHIP 100PF 5% 50V
C1411	1-164-156-11	s	CERAMIC, CHIP 0.1uF 25V
C1413	1-164-156-11	s	CERAMIC, CHIP 0.1uF 25V
C1415	1-164-156-11	s	CERAMIC, CHIP 0.1uF 25V
C1416	1-164-156-11	s	CERAMIC, CHIP 0.1uF 25V
C1417	1-135-227-11	s	TANTALUM, CHIP 100uF 20% 6.3V
C1418	1-135-227-11	s	TANTALUM, CHIP 100uF 20% 6.3V
C1419	1-135-227-11	s	TANTALUM, CHIP 100uF 20% 6.3V
C1420	1-135-227-11	s	TANTALUM, CHIP 100uF 20% 6.3V
C1421	1-135-161-21	s	TANTALUM, CHIP 22uF 10% 10V
C1422	1-164-156-11	s	CERAMIC, CHIP 0.1uF 25V
C1423	1-164-156-11	s	CERAMIC, CHIP 0.1uF 25V
C1424	1-164-156-11	s	CERAMIC, CHIP 0.1uF 25V
C1425	1-164-156-11	s	CERAMIC, CHIP 0.1uF 25V
C1427	1-164-156-11	s	CERAMIC, CHIP 0.1uF 25V
C1428	1-164-156-11	s	CERAMIC, CHIP 0.1uF 25V
C1430	1-164-156-11	s	CERAMIC, CHIP 0.1uF 25V
C1433	1-164-156-11	s	CERAMIC, CHIP 0.1uF 25V
C1434	1-126-392-11	s	ELECT, CHIP 100uF 20% 6.3V
C1450	1-162-718-11	s	CERAMIC 220PF 1% 50V
C1600	1-164-156-11	s	CERAMIC, CHIP 0.1uF 25V
C1601	1-164-156-11	s	CERAMIC, CHIP 0.1uF 25V
C1602	1-164-156-11	s	CERAMIC, CHIP 0.1uF 25V
C1603	1-164-156-11	s	CERAMIC, CHIP 0.1uF 25V
C2500	1-164-156-11	s	CERAMIC, CHIP 0.1uF 25V
C2501	1-164-156-11	s	CERAMIC, CHIP 0.1uF 25V
C2502	1-164-156-11	s	CERAMIC, CHIP 0.1uF 25V
CN201	1-774-269-11	s	CONNECTOR, BOARD TO BOARD 30P
CN202	1-774-269-11	s	CONNECTOR, BOARD TO BOARD 30P
CN203	1-774-268-11	s	CONNECTOR, BOARD TO BOARD 26P
CN204	1-774-266-11	s	CONNECTOR, BOARD TO BOARD 18P
CN205	1-750-667-11	s	CONNECTOR, BOARD TO BOARD 100P
CN206	1-566-765-11	o	CONNECTOR 10P, MALE
CN207	1-566-767-11	o	CONNECTOR 12P, MALE
CN208	1-566-761-11	o	CONNECTOR 6P, MALE
CN211	1-565-430-11	s	SOCKET, SIL 10P
CN212	1-573-201-11	s	SOCKET, SIL 5P
CN213	1-573-201-11	s	SOCKET, SIL 5P
CN908	1-774-267-11	s	CONNECTOR, BOARD TO BOARD 20P
CN909	1-774-269-11	s	CONNECTOR, BOARD TO BOARD 30P
CN910	1-774-269-11	s	CONNECTOR, BOARD TO BOARD 30P
CN911	1-774-269-11	s	CONNECTOR, BOARD TO BOARD 30P
CP100	1-760-275-11	s	VCO, CRYSTAL 27.00000000MHz
CP200	1-760-277-11	s	VCO, CRYSTAL 28.63636000MHz [for NTSC]
	1-760-263-11	s	VCO, CRYSTAL 35.46895000MHz [for PAL]
CP1100	1-760-847-21	s	OSCILLATOR, CRYSTAL 33.07825000MHz [for NTSC]
	1-760-846-11	s	OSCILLATOR, CRYSTAL 32.51435000MHz [for PAL]
CP1300	1-760-267-11	s	VCO, CRYSTAL 14.31818000MHz [for NTSC]
	1-760-268-11	s	VCO, CRYSTAL 17.73447500MHz [for PAL]

(DPR-62/62P BOARD)

Ref. No. or Q'ty	Part No.	SP	Description
CP1301	1-577-223-11	s	VCO 24.576MHz
CP1302	1-760-275-11	s	VCO, CRYSTAL 27.00000000MHz
D200	8-719-941-23	s	DIODE DA204U [for PAL]
D301	8-719-941-23	s	DIODE DA204U
D302	8-719-023-69	s	DIODE SB007T03Q
D303	8-719-023-69	s	DIODE SB007T03Q
D304	8-719-023-69	s	DIODE SB007T03Q
D305	8-719-941-23	s	DIODE DA204U
D1100	8-719-941-23	s	DIODE DA204U
D1300	8-719-941-23	s	DIODE DA204U [for NTSC]
D1301-1305	8-719-941-23	s	DIODE DA204U
D1306	8-719-123-82	s	DIODE 1SS303-T1
D1307	8-719-023-69	s	DIODE SB007T03Q
D1308	8-719-123-82	s	DIODE 1SS303-T1
D1400	8-719-941-23	s	DIODE DA204U
FB1	1-543-309-21	s	BEAD, FERRITE
FB2	1-543-309-21	s	BEAD, FERRITE
FB101	1-543-309-21	s	BEAD, FERRITE
FB201	1-543-309-21	s	BEAD, FERRITE
FB1301	1-543-309-21	s	BEAD, FERRITE
FB1303	1-543-309-21	s	BEAD, FERRITE
FB1304	1-543-309-21	s	BEAD, FERRITE
IC4	8-759-079-85	s	IC TC74VHC244FS(EL)
IC20	8-759-079-85	s	IC TC74VHC244FS(EL)
IC21	8-759-079-85	s	IC TC74VHC244FS(EL)
IC22	8-759-079-85	s	IC TC74VHC244FS(EL)
IC25	8-759-079-49	s	IC TC74VHC04FS(EL)
IC26	8-759-079-52	s	IC TC74VHC08FS(EL)
IC105	8-759-234-20	s	IC TC7S08F
IC111	8-759-080-02	s	IC TC74VHC541FS(EL)
IC112	8-759-359-12	s	IC DS1000Z-100
IC113	8-752-306-51	s	IC CX23065A
IC114	8-759-105-49	s	IC UPC319G2
IC116	8-752-360-90	s	IC CXD303-101Q [for NTSC]
IC117-203	8-759-079-74	s	IC TC74VHC157FS(EL)
IC204	8-759-517-31	s	IC S-8052-ANY-NH
IC205	8-759-249-01	s	IC CXD8382BQ
IC206	8-759-080-02	s	IC TC74VHC541FS(EL)
IC207	8-759-079-87	s	IC TC74VHC245FS(EL)
IC208	8-752-306-51	s	IC CX23065A
IC209	8-759-277-19	s	IC UPD485505G-35
IC210	8-759-079-46	s	IC TC74VHC00FS(EL)
IC211	8-759-030-16	s	IC MC34182M
IC212	8-759-277-19	s	IC UPD485505G-35
IC213	8-759-234-77	s	IC TC4S66F [for PAL]
IC214	8-759-082-55	s	IC TC7W00FU [for PAL]
IC300	8-759-079-52	s	IC TC74VHC08FS(EL)
IC301	8-759-079-86	s	IC TC74VHCT244FS(EL)
IC302	8-759-927-12	s	IC SN74HCT244ANS
IC303	8-759-269-09	s	IC SN74HCT04ANS
IC304	8-759-940-45	s	IC S-8054HN-CB
IC305	8-759-175-71	s	IC UPD78P014GC-AB8
IC306	8-759-097-51	s	IC MSM6524GS-VKR2
IC307	8-759-082-57	s	IC TC7W04FU
IC309	8-759-080-02	s	IC TC74VHC541FS(EL)

(DPR-62/62P BOARD)

Ref. No. or Q'ty	Part No.	SP	Description
IC310	8-759-277-19	s	IC UPD485505G-35
IC311	8-759-277-19	s	IC UPD485505G-35
IC312	8-759-277-19	s	IC UPD485505G-35
IC313	8-759-186-54	s	IC TC74VHC164F
IC314	8-759-080-03	s	IC TC74VHCT541FS(EL)
IC316	8-759-079-86	s	IC TC74VHCT244FS(EL)
IC500	8-759-080-02	s	IC TC74VHC541FS(EL)
IC501	8-759-188-02	s	IC CXD8854Q
IC503	8-759-186-84	s	IC TC74VHC86F
IC600	8-759-349-09	s	IC UPD434008LE-20-P
IC601	8-759-349-09	s	IC UPD434008LE-20-P
IC602	8-759-349-09	s	IC UPD434008LE-20-P
IC603	8-759-177-52	s	IC HM62W8127HJP-27
IC604	8-759-177-52	s	IC HM62W8127HJP-27
IC605	8-759-177-52	s	IC HM62W8127HJP-27
IC606	8-759-177-52	s	IC HM62W8127HJP-27
IC701	8-759-177-53	s	IC HM62W8127HJP-35
IC702	8-759-177-53	s	IC HM62W8127HJP-35
IC704	8-759-177-53	s	IC HM62W8127HJP-35
IC705	8-759-177-53	s	IC HM62W8127HJP-35
IC707	8-759-177-49	s	IC HM62W9127HJP-35
IC708	8-759-177-49	s	IC HM62W9127HJP-35
IC800	8-759-079-60	s	IC TC74VHC32FS(EL)
IC801	8-759-079-87	s	IC TC74VHC245FS(EL)
IC802	8-759-080-02	s	IC TC74VHC541FS(EL)
IC803	8-759-175-60	s	IC SN74LVT245NS-E05
IC808	8-759-080-06	s	IC TC74VHC574FS(EL)
IC809	8-759-080-06	s	IC TC74VHC574FS(EL)
IC811	8-759-349-09	s	IC UPD434008LE-20-P
IC812	8-759-349-09	s	IC UPD434008LE-20-P
IC813	8-759-349-09	s	IC UPD434008LE-20-P
IC1000	8-759-079-74	s	IC TC74VHC157FS(EL)
IC1001	8-759-079-74	s	IC TC74VHC157FS(EL)
IC1002	8-759-080-02	s	IC TC74VHC541FS(EL)
IC1003	8-759-079-80	s	IC TC74VHC175FS(EL)
IC1005	8-759-177-53	s	IC HM62W8127HJP-35
IC1006	8-759-079-52	s	IC TC74VHC08FS(EL)
IC1007	8-759-195-81	s	IC TC7S86FU
IC1008	8-759-079-60	s	IC TC74VHC32FS(EL)
IC1009	8-759-079-52	s	IC TC74VHC08FS(EL)
IC1011	8-759-186-43	s	IC TC74VHC123AF
IC1013	8-759-080-06	s	IC TC74VHC574FS(EL)
IC1014	8-759-079-80	s	IC TC74VHC175FS(EL)
IC1103	8-759-080-02	s	IC TC74VHC541FS(EL)
IC1104	8-759-079-46	s	IC TC74VHC00FS(EL)
IC1105	8-752-377-24	s	IC CXD306-138Q
IC1106	8-759-079-46	s	IC TC74VHC00FS(EL)
IC1107	8-759-174-16	s	IC TC74VHC244F
IC1108	8-759-079-74	s	IC TC74VHC157FS(EL)
IC1109	8-759-079-74	s	IC TC74VHC157FS(EL)
IC1111	8-752-377-24	s	IC CXD306-138Q
IC1112	8-759-080-02	s	IC TC74VHC541FS(EL)
IC1113	8-759-186-84	s	IC TC74VHC86F
IC1114	8-759-080-02	s	IC TC74VHC541FS(EL)
IC1115	8-759-080-02	s	IC TC74VHC541FS(EL)
IC1116	8-759-112-53	s	IC UPC1663G
IC1117	8-759-112-53	s	IC UPC1663G
IC1118	8-759-030-55	s	IC MC1496M
IC1119	8-759-030-55	s	IC MC1496M

(DPR-62/62P BOARD)

Ref. No. or Q'ty	Part No.	SP	Description
IC1120	8-759-082-53	s	IC TLC274CPW
IC1121	8-759-079-74	s	IC TC74VHC157FS(EL)
IC1122	8-759-080-06	s	IC TC74VHC574FS(EL)
IC1124	8-759-082-58	s	IC TC7W08FU
IC1300	8-759-195-81	s	IC TC7S86FU [for PAL]
IC1301	8-759-014-29	s	IC MC34184M [for PAL]
IC1302	8-759-300-71	s	IC HD14053BFP
IC1303	8-759-987-27	s	IC LM1881M
IC1304	8-759-239-58	s	IC TC74HC221AF
IC1305	8-752-306-51	s	IC CX23065A [for NTSC]
IC1306	8-759-030-16	s	IC MC34182M [for PAL]
IC1307	8-759-262-03	s	IC MC14577CF
IC1308	8-759-030-16	s	IC MC34182M
IC1309	8-759-702-08	s	IC NJM360M
IC1310	8-759-925-05	s	IC LM2903PS [for PAL]
IC1311	8-759-082-57	s	IC TC7W04FU
IC1312	8-759-184-64	s	IC TC4W66FU
IC1313	8-759-035-93	s	IC TC7S32F-TE85L [for PAL]
IC1314	8-759-702-08	s	IC NJM360M
IC1315	8-759-907-81	s	IC SN74LS221NS
IC1316	8-759-175-66	s	IC CXD8817Q
IC1317	8-759-014-29	s	IC MC34184M
IC1318	8-759-907-81	s	IC SN74LS221NS
IC1319	8-759-082-57	s	IC TC7W04FU
IC1320	8-752-334-64	s	IC CXD1171M
IC1321	8-759-926-15	s	IC SN74HC151ANS
IC1322	8-759-234-20	s	IC TC7S08F
IC1323	8-759-082-57	s	IC TC7W04FU
IC1324	8-759-186-53	s	IC TC74VHC163F
IC1325	8-759-925-05	s	IC LM2903PS
IC1326	8-759-702-08	s	IC NJM360M
IC1327	8-759-186-39	s	IC TC74VHC74F
IC1328	8-759-907-81	s	IC SN74LS221NS
IC1329	8-752-334-64	s	IC CXD1171M [for PAL]
IC1330	8-759-082-61	s	IC TC4W53FU
IC1331	8-759-080-02	s	IC TC74VHC541FS(EL)
IC1332	8-752-306-51	s	IC CX23065A
IC1333	8-759-702-08	s	IC NJM360M [for PAL]
IC1334	8-759-030-16	s	IC MC34182M
IC1335	8-759-926-15	s	IC SN74HC151ANS
IC1336	8-759-907-81	s	IC SN74LS221NS
IC1337	8-759-175-65	s	IC CXD8821Q
IC1338	8-759-262-03	s	IC MC14577CF
IC1339	8-759-082-61	s	IC TC4W53FU
IC1340	8-759-014-29	s	IC MC34184M
IC1341	8-759-234-77	s	IC TC4S66F
IC1342	8-759-234-77	s	IC TC4S66F
IC1343	8-759-174-16	s	IC TC74VHC244F
IC1344	8-759-186-77	s	IC TC74VHC541F
IC1345	8-759-186-63	s	IC TC74VHC245F
IC1346	8-759-186-63	s	IC TC74VHC245F
IC1348	8-759-272-21	s	IC TC74VHCT541F
IC1349	8-759-272-21	s	IC TC74VHCT541F
IC1600	8-759-348-81	s	IC SM5843AS1-E2
IC1601	8-759-348-81	s	IC SM5843AS1-E2
IC1602	8-759-269-16	s	IC SN74HCT32ANS
IC1603	8-759-348-81	s	IC SM5843AS1-E2
IC1604	8-759-348-81	s	IC SM5843AS1-E2
IC1605	8-759-079-74	s	IC TC74VHC157FS(EL)

(DPR-62/62P BOARD)

Ref. No. or Q'ty	Part No.	SP	Description
IC2500	8-759-079-97	s	IC TC74VHC374FS(EL)
IC2501	8-759-079-97	s	IC TC74VHC374FS(EL)
IC2502	8-759-348-79	s	IC TE7751
IC3000	8-759-079-74	s	IC TC74VHC157FS(EL)
IC3001	8-759-079-60	s	IC TC74VHC32FS(EL)
IC3002	8-759-079-60	s	IC TC74VHC32FS(EL)
IC5900	8-759-079-80	s	IC TC74VHC175FS(EL)
L1-7	1-409-579-11	s	COIL, CHOKE 8.2uH
L10	1-409-579-11	s	COIL, CHOKE 8.2uH
L12	1-409-579-11	s	COIL, CHOKE 8.2uH
L13	1-409-579-11	s	COIL, CHOKE 8.2uH
L1300	1-412-138-11	s	INDUCTOR 100uH
L1301	1-412-188-11	s	INDUCTOR 22uH
L1302	1-410-388-31	s	INDUCTOR, CHIP 39uH [for PAL]
	1-410-391-11	s	INDUCTOR, CHIP 68uH [for NTSC]
L1303	1-412-191-11	s	INDUCTOR 47uH
L1304	1-412-191-11	s	INDUCTOR 47uH
L1305	1-412-191-11	s	INDUCTOR 47uH [for PAL]
L1306	1-412-191-11	s	INDUCTOR 47uH [for PAL]
Q1100	8-729-140-47	s	TRANSISTOR 2SC3735-B34
Q1101	8-729-140-47	s	TRANSISTOR 2SC3735-B34
Q1102	8-729-140-47	s	TRANSISTOR 2SC3735-B34
Q1103	8-729-824-34	s	TRANSISTOR 2SJ187
Q1104	8-729-140-47	s	TRANSISTOR 2SC3735-B34
Q1300	8-729-140-63	s	TRANSISTOR 2SA1611-M5M6
Q1301	8-729-140-63	s	TRANSISTOR 2SA1611-M5M6
Q1302	8-729-143-07	s	TRANSISTOR 2SA1610-YY33
Q1303	8-729-143-07	s	TRANSISTOR 2SA1610-YY33
Q1304	8-729-029-14	s	TRANSISTOR DTC144EUA-T106
Q1305	8-729-117-32	s	TRANSISTOR 2SC4177
Q1306	8-729-117-32	s	TRANSISTOR 2SC4177
Q1307	8-729-117-32	s	TRANSISTOR 2SC4177
Q1308	8-729-140-63	s	TRANSISTOR 2SA1611-M5M6
Q1309	8-729-140-63	s	TRANSISTOR 2SA1611-M5M6
Q1310	8-729-140-63	s	TRANSISTOR 2SA1611-M5M6
Q1311	8-729-028-91	s	TRANSISTOR DTA144EUA-T106
Q1312	8-729-140-63	s	TRANSISTOR 2SA1611-M5M6
Q1313	8-729-117-32	s	TRANSISTOR 2SC4177
R1	1-216-805-11	s	METAL, CHIP 47 5% 1/16W
R2	1-216-805-11	s	METAL, CHIP 47 5% 1/16W
R3	1-216-805-11	s	METAL, CHIP 47 5% 1/16W
R4	1-216-805-11	s	METAL, CHIP 47 5% 1/16W
R5	1-216-864-11	s	METEL, CHIP 0 [for PAL]
R6	1-216-864-11	s	METEL, CHIP 0
R7	1-216-864-11	s	METEL, CHIP 0
R10	1-216-841-11	s	METAL, CHIP 47K 5% 1/16W
R11	1-216-841-11	s	METAL, CHIP 47K 5% 1/16W
R12	1-216-841-11	s	METAL, CHIP 47K 5% 1/16W
R16	1-216-805-11	s	METAL, CHIP 47 5% 1/16W
R17	1-216-805-11	s	METAL, CHIP 47 5% 1/16W
R18	1-216-864-11	s	METEL, CHIP 0
R19	1-216-864-11	s	METEL, CHIP 0
R20	1-216-805-11	s	METAL, CHIP 47 5% 1/16W
R21	1-216-805-11	s	METAL, CHIP 47 5% 1/16W
R22	1-216-805-11	s	METAL, CHIP 47 5% 1/16W
R23	1-216-864-11	s	METEL, CHIP 0
R26	1-216-864-11	s	METEL, CHIP 0
R27	1-216-864-11	s	METEL, CHIP 0

(DPR-62/62P BOARD)

Ref. No. or Q'ty	Part No.	SP	Description
R31	1-216-864-11	s	METEL, CHIP 0
R32	1-216-864-11	s	METEL, CHIP 0
R33	1-216-841-11	s	METAL, CHIP 47K 5% 1/16W
R102	1-216-864-11	s	METEL, CHIP 0
R103	1-216-833-11	s	METAL, CHIP 10K 5% 1/16W
R104	1-216-805-11	s	METAL, CHIP 47 5% 1/16W
R105	1-216-805-11	s	METAL, CHIP 47 5% 1/16W
R107	1-216-805-11	s	METAL, CHIP 47 5% 1/16W
R110	1-216-805-11	s	METAL, CHIP 47 5% 1/16W
R111	1-216-805-11	s	METAL, CHIP 47 5% 1/16W
R112	1-216-821-11	s	METAL, CHIP 1K 5% 1/16W
R113	1-216-805-11	s	METAL, CHIP 47 5% 1/16W
R114	1-216-805-11	s	METAL, CHIP 47 5% 1/16W
R118	1-216-864-11	s	METEL, CHIP 0
R120	1-216-864-11	s	METEL, CHIP 0
R121	1-216-864-11	s	METEL, CHIP 0
R122	1-216-833-11	s	METAL, CHIP 10K 5% 1/16W
R123	1-216-833-11	s	METAL, CHIP 10K 5% 1/16W
R124	1-216-841-11	s	METAL, CHIP 47K 5% 1/16W
R125	1-216-864-11	s	METEL, CHIP 0
R126	1-216-833-11	s	METAL, CHIP 10K 5% 1/16W
R127	1-216-864-11	s	METEL, CHIP 0
R128	1-216-805-11	s	METAL, CHIP 47 5% 1/16W
R129	1-216-805-11	s	METAL, CHIP 47 5% 1/16W
R130	1-216-805-11	s	METAL, CHIP 47 5% 1/16W
R131	1-216-833-11	s	METAL, CHIP 10K 5% 1/16W
R132	1-216-805-11	s	METAL, CHIP 47 5% 1/16W
R133	1-216-805-11	s	METAL, CHIP 47 5% 1/16W
R134	1-216-864-11	s	METEL, CHIP 0
R135	1-216-805-11	s	METAL, CHIP 47 5% 1/16W
R138	1-216-864-11	s	METEL, CHIP 0
R139	1-216-864-11	s	METEL, CHIP 0
R140	1-216-805-11	s	METAL, CHIP 47 5% 1/16W
R142	1-216-841-11	s	METAL, CHIP 47K 5% 1/16W
R200	1-216-805-11	s	METAL, CHIP 47 5% 1/16W
R201	1-216-805-11	s	METAL, CHIP 47 5% 1/16W
R202	1-216-805-11	s	METAL, CHIP 47 5% 1/16W
R203	1-216-833-11	s	METAL, CHIP 10K 5% 1/16W
R204	1-216-833-11	s	METAL, CHIP 10K 5% 1/16W [for NTSC]
R206	1-216-833-11	s	METAL, CHIP 10K 5% 1/16W [for PAL]
R207	1-216-833-11	s	METAL, CHIP 10K 5% 1/16W
R208	1-216-805-11	s	METAL, CHIP 47 5% 1/16W
R209	1-216-805-11	s	METAL, CHIP 47 5% 1/16W
R210	1-216-822-11	s	METAL, CHIP 1.2K 5% 1/16W [for PAL]
R211	1-216-805-11	s	METAL, CHIP 47 5% 1/16W
R213	1-216-864-11	s	METEL, CHIP 0
R214	1-216-805-11	s	METAL, CHIP 47 5% 1/16W [for PAL]
R215	1-216-805-11	s	METAL, CHIP 47 5% 1/16W [for NTSC]
R216	1-216-805-11	s	METAL, CHIP 47 5% 1/16W
R217	1-216-805-11	s	METAL, CHIP 47 5% 1/16W
R218	1-216-805-11	s	METAL, CHIP 47 5% 1/16W
R219	1-218-708-11	s	METAL, CHIP 4.7K 0.5% 1/16W
R220	1-216-853-11	s	METAL, CHIP 470K 5% 1/16W [for PAL]
R221	1-216-833-11	s	METAL, CHIP 10K 5% 1/16W
R222	1-216-833-11	s	METAL, CHIP 10K 5% 1/16W
R223	1-216-864-11	s	METEL, CHIP 0
R224	1-218-716-11	s	METAL, CHIP 10K 0.5% 1/16W
R225	1-216-864-11	s	METEL, CHIP 0
R226	1-216-857-11	s	METAL, CHIP 1M 5% 1/16W

(DPR-62/62P BOARD)

Ref. No. or Q'ty	Part No.	SP	Description
R227	1-216-805-11	s	METAL, CHIP 47 5% 1/16W
R228	1-216-805-11	s	METAL, CHIP 47 5% 1/16W
R229	1-216-864-11	s	METEL, CHIP 0
R230	1-216-864-11	s	METEL, CHIP 0
R231	1-216-805-11	s	METAL, CHIP 47 5% 1/16W
R232	1-216-864-11	s	METEL, CHIP 0
R233	1-216-864-11	s	METEL, CHIP 0
R234	1-216-805-11	s	METAL, CHIP 47 5% 1/16W
R235	1-216-805-11	s	METAL, CHIP 47 5% 1/16W
R236	1-216-805-11	s	METAL, CHIP 47 5% 1/16W
R237	1-216-805-11	s	METAL, CHIP 47 5% 1/16W
R290	1-216-864-11	s	METEL, CHIP 0
R292	1-216-845-11	s	METAL, CHIP 100K 5% 1/16W
R296	1-216-864-11	s	METEL, CHIP 0
R300	1-216-833-11	s	METAL, CHIP 10K 5% 1/16W
R301	1-216-845-11	s	METAL, CHIP 100K 5% 1/16W
R302	1-216-864-11	s	METEL, CHIP 0
R304	1-216-864-11	s	METEL, CHIP 0
R305	1-216-833-11	s	METAL, CHIP 10K 5% 1/16W
R307	1-216-864-11	s	METEL, CHIP 0
R308	1-216-833-11	s	METAL, CHIP 10K 5% 1/16W
R309	1-216-864-11	s	METEL, CHIP 0
R310	1-216-833-11	s	METAL, CHIP 10K 5% 1/16W
R311	1-216-845-11	s	METAL, CHIP 100K 5% 1/16W
R312	1-216-833-11	s	METAL, CHIP 10K 5% 1/16W
R314	1-216-833-11	s	METAL, CHIP 10K 5% 1/16W
R315	1-216-833-11	s	METAL, CHIP 10K 5% 1/16W
R316	1-216-833-11	s	METAL, CHIP 10K 5% 1/16W
R317	1-216-864-11	s	METEL, CHIP 0
R318	1-216-864-11	s	METEL, CHIP 0
R319-325	1-216-821-11	s	METAL, CHIP 1K 5% 1/16W
R326	1-216-833-11	s	METAL, CHIP 10K 5% 1/16W
R327	1-216-821-11	s	METAL, CHIP 1K 5% 1/16W
R328	1-216-821-11	s	METAL, CHIP 1K 5% 1/16W
R329	1-216-821-11	s	METAL, CHIP 1K 5% 1/16W
R330	1-216-864-11	s	METEL, CHIP 0
R331	1-216-833-11	s	METAL, CHIP 10K 5% 1/16W
R333	1-216-821-11	s	METAL, CHIP 1K 5% 1/16W
R334	1-216-833-11	s	METAL, CHIP 10K 5% 1/16W
R335	1-216-833-11	s	METAL, CHIP 10K 5% 1/16W
R336	1-216-833-11	s	METAL, CHIP 10K 5% 1/16W
R337	1-216-833-11	s	METAL, CHIP 10K 5% 1/16W
R338	1-216-809-11	s	METAL, CHIP 100 5% 1/16W
R339	1-216-809-11	s	METAL, CHIP 100 5% 1/16W
R340	1-216-809-11	s	METAL, CHIP 100 5% 1/16W
R341	1-216-809-11	s	METAL, CHIP 100 5% 1/16W
R342	1-216-821-11	s	METAL, CHIP 1K 5% 1/16W
R343-348	1-216-809-11	s	METAL, CHIP 100 5% 1/16W
R349	1-216-817-11	s	METAL, CHIP 470 5% 1/16W
R350	1-216-809-11	s	METAL, CHIP 100 5% 1/16W
R351	1-216-809-11	s	METAL, CHIP 100 5% 1/16W
R352	1-216-864-11	s	METEL, CHIP 0
R354	1-216-805-11	s	METAL, CHIP 47 5% 1/16W [for PAL]
R355	1-216-821-11	s	METAL, CHIP 1K 5% 1/16W
R356	1-216-821-11	s	METAL, CHIP 1K 5% 1/16W
R357-363	1-216-864-11	s	METEL, CHIP 0
R364	1-216-845-11	s	METAL, CHIP 100K 5% 1/16W
R375	1-216-864-11	s	METEL, CHIP 0
R377-382	1-216-864-11	s	METEL, CHIP 0

(DPR-62/62P BOARD)

Ref. No. or Q'ty	Part No.	SP	Description
R383	1-216-809-11	s	METAL, CHIP 100 5% 1/16W
R384	1-216-809-11	s	METAL, CHIP 100 5% 1/16W
R385	1-216-864-11	s	METEL, CHIP 0
R390	1-216-833-11	s	METAL, CHIP 10K 5% 1/16W
R391	1-216-864-11	s	METEL, CHIP 0
R392	1-216-833-11	s	METAL, CHIP 10K 5% 1/16W
R395	1-216-864-11	s	METEL, CHIP 0
R502	1-216-809-11	s	METAL, CHIP 100 5% 1/16W
R503	1-216-809-11	s	METAL, CHIP 100 5% 1/16W
R504	1-216-864-11	s	METEL, CHIP 0
R505	1-216-864-11	s	METEL, CHIP 0
R506	1-216-864-11	s	METEL, CHIP 0
R507	1-216-864-11	s	METEL, CHIP 0 [for NTSC]
R508	1-216-864-11	s	METEL, CHIP 0
R509	1-216-864-11	s	METEL, CHIP 0
R510	1-216-864-11	s	METEL, CHIP 0
R513	1-216-864-11	s	METEL, CHIP 0
R514	1-216-864-11	s	METEL, CHIP 0
R515	1-216-864-11	s	METEL, CHIP 0
R516	1-216-864-11	s	METEL, CHIP 0
R517	1-216-864-11	s	METEL, CHIP 0 [for PAL]
R518	1-216-864-11	s	METEL, CHIP 0
R609	1-216-864-11	s	METEL, CHIP 0
R611	1-216-864-11	s	METEL, CHIP 0
R613	1-216-864-11	s	METEL, CHIP 0
R700	1-216-805-11	s	METAL, CHIP 47 5% 1/16W
R701-712	1-216-864-11	s	METEL, CHIP 0
R713	1-216-809-11	s	METAL, CHIP 100 5% 1/16W
R714	1-216-809-11	s	METAL, CHIP 100 5% 1/16W
R715	1-216-864-11	s	METEL, CHIP 0
R716	1-216-864-11	s	METEL, CHIP 0
R719	1-216-821-11	s	METAL, CHIP 1K 5% 1/16W
R720-730	1-216-864-11	s	METEL, CHIP 0
R800	1-216-864-11	s	METEL, CHIP 0
R801	1-216-864-11	s	METEL, CHIP 0
R802	1-216-864-11	s	METEL, CHIP 0
R809-815	1-216-864-11	s	METEL, CHIP 0
R816	1-216-805-11	s	METAL, CHIP 47 5% 1/16W
R817	1-216-841-11	s	METAL, CHIP 47K 5% 1/16W
R818	1-216-841-11	s	METAL, CHIP 47K 5% 1/16W
R1000-1006	1-216-864-11	s	METEL, CHIP 0
R1007	1-216-809-11	s	METAL, CHIP 100 5% 1/16W
R1008-1012	1-216-864-11	s	METEL, CHIP 0
R1014	1-216-805-11	s	METAL, CHIP 47 5% 1/16W
R1015	1-216-845-11	s	METAL, CHIP 100K 5% 1/16W
R1016	1-216-805-11	s	METAL, CHIP 47 5% 1/16W
R1019	1-216-845-11	s	METAL, CHIP 100K 5% 1/16W
R1020	1-216-864-11	s	METEL, CHIP 0
R1022	1-216-805-11	s	METAL, CHIP 47 5% 1/16W
R1023	1-216-805-11	s	METAL, CHIP 47 5% 1/16W
R1024	1-216-845-11	s	METAL, CHIP 100K 5% 1/16W
R1025	1-216-864-11	s	METEL, CHIP 0
R1026	1-216-864-11	s	METEL, CHIP 0
R1027	1-216-864-11	s	METEL, CHIP 0
R1028	1-218-740-11	s	METAL, CHIP 100K 0.5% 1/16W
R1029	1-218-740-11	s	METAL, CHIP 100K 0.5% 1/16W

(DPR-62/62P BOARD)

Ref. No. or Q'ty	Part No.	SP	Description
R1030	1-216-864-11	s	METEL, CHIP 0
R1100	1-216-805-11	s	METAL, CHIP 47 5% 1/16W
R1101	1-218-707-11	s	METAL, CHIP 4.3K 0.5% 1/16W
R1102	1-216-864-11	s	METEL, CHIP 0
R1103	1-216-809-11	s	METAL, CHIP 100 5% 1/16W
R1104	1-216-809-11	s	METAL, CHIP 100 5% 1/16W
R1105	1-216-864-11	s	METEL, CHIP 0
R1106	1-216-824-11	s	METAL, CHIP 1.8K 5% 1/16W
R1107	1-216-809-11	s	METAL, CHIP 100 5% 1/16W
R1108	1-216-864-11	s	METEL, CHIP 0
R1109	1-216-864-11	s	METEL, CHIP 0
R1111	1-216-864-11	s	METEL, CHIP 0
R1112	1-216-845-11	s	METAL, CHIP 100K 5% 1/16W
R1113	1-216-864-11	s	METEL, CHIP 0 [for NTSC]
R1118	1-216-864-11	s	METEL, CHIP 0
R1119	1-216-864-11	s	METEL, CHIP 0
R1120	1-216-864-11	s	METEL, CHIP 0
R1121	1-216-833-11	s	METAL, CHIP 10K 5% 1/16W
R1122	1-216-864-11	s	METEL, CHIP 0
R1123	1-216-845-11	s	METAL, CHIP 100K 5% 1/16W
R1124	1-216-864-11	s	METEL, CHIP 0
R1125	1-216-833-11	s	METAL, CHIP 10K 5% 1/16W
R1126	1-218-864-11	s	METAL, CHIP 5.1K 0.5% 1/16W
R1127	1-216-845-11	s	METAL, CHIP 100K 5% 1/16W
R1128	1-216-809-11	s	METAL, CHIP 100 5% 1/16W
R1129	1-218-864-11	s	METAL, CHIP 5.1K 0.5% 1/16W
R1130	1-216-824-11	s	METAL, CHIP 1.8K 5% 1/16W
R1131	1-216-864-11	s	METEL, CHIP 0
R1133	1-216-864-11	s	METEL, CHIP 0
R1134	1-216-822-11	s	METAL, CHIP 1.2K 5% 1/16W
R1135	1-216-845-11	s	METAL, CHIP 100K 5% 1/16W
R1136	1-216-864-11	s	METEL, CHIP 0
R1137	1-216-864-11	s	METEL, CHIP 0
R1140	1-216-809-11	s	METAL, CHIP 100 5% 1/16W
R1141	1-216-864-11	s	METEL, CHIP 0
R1145	1-216-864-11	s	METEL, CHIP 0
R1146	1-216-864-11	s	METEL, CHIP 0
R1147	1-218-867-11	s	METAL, CHIP 6.8K 0.5% 1/16W
R1148	1-216-809-11	s	METAL, CHIP 100 5% 1/16W
R1149	1-216-809-11	s	METAL, CHIP 100 5% 1/16W
R1150	1-216-809-11	s	METAL, CHIP 100 5% 1/16W
R1151	1-216-809-11	s	METAL, CHIP 100 5% 1/16W
R1152	1-218-716-11	s	METAL, CHIP 10K 0.5% 1/16W
R1153	1-218-716-11	s	METAL, CHIP 10K 0.5% 1/16W
R1154-1158	1-218-668-11	s	METAL, CHIP 100 0.5% 1/16W
R1159	1-216-809-11	s	METAL, CHIP 100 5% 1/16W
R1160	1-218-668-11	s	METAL, CHIP 100 0.5% 1/16W
R1161	1-218-668-11	s	METAL, CHIP 100 0.5% 1/16W
R1162	1-218-837-11	s	METAL, CHIP 390 0.5% 1/16W
R1163	1-218-837-11	s	METAL, CHIP 390 0.5% 1/16W
R1164	1-218-837-11	s	METAL, CHIP 390 0.5% 1/16W
R1165	1-218-837-11	s	METAL, CHIP 390 0.5% 1/16W
R1168	1-218-838-11	s	METAL, CHIP 430 0.5% 1/16W
R1169	1-218-838-11	s	METAL, CHIP 430 0.5% 1/16W
R1170	1-218-838-11	s	METAL, CHIP 430 0.5% 1/16W
R1171	1-218-838-11	s	METAL, CHIP 430 0.5% 1/16W
R1172	1-216-822-11	s	METAL, CHIP 1.2K 5% 1/16W
R1173	1-216-832-11	s	METAL, CHIP 8.2K 5% 1/16W

(DPR-62/62P BOARD)

Ref. No. or Q'ty	Part No.	SP	Description
R1174	1-216-813-11	s	METAL, CHIP 220 5% 1/16W
R1175	1-216-813-11	s	METAL, CHIP 220 5% 1/16W
R1176	1-216-824-11	s	METAL, CHIP 1.8K 5% 1/16W
R1177	1-216-822-11	s	METAL, CHIP 1.2K 5% 1/16W
R1178	1-216-822-11	s	METAL, CHIP 1.2K 5% 1/16W
R1179	1-216-813-11	s	METAL, CHIP 220 5% 1/16W
R1180	1-218-692-11	s	METAL, CHIP 1K 0.5% 1/16W
R1181	1-218-692-11	s	METAL, CHIP 1K 0.5% 1/16W
R1182	1-218-692-11	s	METAL, CHIP 1K 0.5% 1/16W
R1183	1-218-692-11	s	METAL, CHIP 1K 0.5% 1/16W
R1184	1-218-851-11	s	METAL, CHIP 1.5K 0.5% 1/16W
R1185	1-218-851-11	s	METAL, CHIP 1.5K 0.5% 1/16W
R1186	1-218-851-11	s	METAL, CHIP 1.5K 0.5% 1/16W
R1187	1-218-851-11	s	METAL, CHIP 1.5K 0.5% 1/16W
R1188	1-218-716-11	s	METAL, CHIP 10K 0.5% 1/16W
R1189	1-218-716-11	s	METAL, CHIP 10K 0.5% 1/16W
R1190	1-218-868-11	s	METAL, CHIP 7.5K 0.5% 1/16W
R1191	1-218-851-11	s	METAL, CHIP 1.5K 0.5% 1/16W
R1192	1-218-851-11	s	METAL, CHIP 1.5K 0.5% 1/16W
R1193	1-218-698-11	s	METAL, CHIP 1.8K 0.5% 1/16W
R1194-1199			
	1-218-851-11	s	METAL, CHIP 1.5K 0.5% 1/16W
R1200	1-218-705-11	s	METAL, CHIP 3.6K 0.5% 1/16W
R1201	1-218-692-11	s	METAL, CHIP 1K 0.5% 1/16W
R1202	1-218-716-11	s	METAL, CHIP 10K 0.5% 1/16W
R1203	1-218-866-11	s	METAL, CHIP 6.2K 0.5% 1/16W
R1204	1-218-866-11	s	METAL, CHIP 6.2K 0.5% 1/16W
R1205	1-218-714-11	s	METAL, CHIP 8.2K 0.5% 1/16W
R1206	1-218-866-11	s	METAL, CHIP 6.2K 0.5% 1/16W
R1207	1-218-866-11	s	METAL, CHIP 6.2K 0.5% 1/16W
R1208	1-218-714-11	s	METAL, CHIP 8.2K 0.5% 1/16W
R1209-1216			
	1-218-716-11	s	METAL, CHIP 10K 0.5% 1/16W
R1217	1-218-692-11	s	METAL, CHIP 1K 0.5% 1/16W
R1218	1-218-692-11	s	METAL, CHIP 1K 0.5% 1/16W
R1219	1-216-864-11	s	METEL, CHIP 0
R1220	1-216-864-11	s	METEL, CHIP 0
R1221	1-216-813-11	s	METAL, CHIP 220 5% 1/16W
R1222	1-216-864-11	s	METEL, CHIP 0
R1223	1-216-864-11	s	METEL, CHIP 0
R1224	1-216-824-11	s	METAL, CHIP 1.8K 5% 1/16W
R1225	1-216-832-11	s	METAL, CHIP 8.2K 5% 1/16W
R1230	1-216-833-11	s	METAL, CHIP 10K 5% 1/16W
R1270-1277			
	1-216-827-11	s	METAL, CHIP 3.3K 5% 1/16W
R1300	1-216-864-11	s	METEL, CHIP 0 [for NTSC]
R1301	1-216-864-11	s	METEL, CHIP 0 [for PAL]
R1302	1-218-692-11	s	METAL, CHIP 1K 0.5% 1/16W
R1303	1-216-864-11	s	METEL, CHIP 0
R1304	1-216-864-11	s	METEL, CHIP 0 [for PAL]
R1305	1-216-821-11	s	METAL, CHIP 1K 5% 1/16W
R1306	1-216-805-11	s	METAL, CHIP 47 5% 1/16W
R1307	1-218-845-11	s	METAL, CHIP 820 0.5% 1/16W
R1308	1-216-822-11	s	METAL, CHIP 1.2K 5% 1/16W [for PAL]
R1309	1-216-821-11	s	METAL, CHIP 1K 5% 1/16W
R1310	1-216-864-11	s	METEL, CHIP 0
R1311	1-216-857-11	s	METAL, CHIP 1M 5% 1/16W [for PAL]
R1312	1-216-840-11	s	METAL, CHIP 39K 5% 1/16W [for PAL]

(DPR-62/62P BOARD)

Ref. No. or Q'ty	Part No.	SP	Description
R1313	1-216-834-11	s	METAL, CHIP 12K 5% 1/16W [for PAL]
R1314	1-216-821-11	s	METAL, CHIP 1K 5% 1/16W
R1315	1-216-857-11	s	METAL, CHIP 1M 5% 1/16W [for PAL]
R1316	1-218-702-11	s	METAL, CHIP 2.7K 0.5% 1/16W
R1317	1-218-716-11	s	METAL, CHIP 10K 0.5% 1/16W
R1318	1-216-821-11	s	METAL, CHIP 1K 5% 1/16W [for NTSC]
R1319	1-216-821-11	s	METAL, CHIP 1K 5% 1/16W [for PAL]
R1320	1-216-845-11	s	METAL, CHIP 100K 5% 1/16W [for NTSC]
R1321	1-216-821-11	s	METAL, CHIP 1K 5% 1/16W [for PAL]
R1322	1-216-821-11	s	METAL, CHIP 1K 5% 1/16W [for PAL]
R1323	1-216-825-11	s	METAL, CHIP 2.2K 5% 1/16W
R1324	1-216-821-11	s	METAL, CHIP 1K 5% 1/16W [for PAL]
R1325	1-216-833-11	s	METAL, CHIP 10K 5% 1/16W
R1326	1-216-833-11	s	METAL, CHIP 10K 5% 1/16W [for PAL]
R1327	1-216-833-11	s	METAL, CHIP 10K 5% 1/16W [for PAL]
R1329	1-216-863-11	s	METAL, CHIP 3.3M 5% 1/16W
R1330	1-216-863-11	s	METAL, CHIP 3.3M 5% 1/16W
R1331	1-216-827-11	s	METAL, CHIP 3.3K 5% 1/16W [for PAL]
R1332	1-216-843-11	s	METAL, CHIP 68K 5% 1/16W
R1333	1-216-841-11	s	METAL, CHIP 47K 5% 1/16W
R1334	1-216-857-11	s	METAL, CHIP 1M 5% 1/16W [for PAL]
R1335	1-216-838-11	s	METAL, CHIP 27K 5% 1/16W
R1336	1-216-821-11	s	METAL, CHIP 1K 5% 1/16W [for PAL]
R1337	1-216-825-11	s	METAL, CHIP 2.2K 5% 1/16W
R1338	1-216-821-11	s	METAL, CHIP 1K 5% 1/16W [for PAL]
R1339	1-216-864-11	s	METEL, CHIP 0 [for PAL]
R1340	1-216-833-11	s	METAL, CHIP 10K 5% 1/16W
R1341	1-216-864-11	s	METEL, CHIP 0 [for NTSC]
R1342	1-216-857-11	s	METAL, CHIP 1M 5% 1/16W
R1343	1-216-829-11	s	METAL, CHIP 4.7K 5% 1/16W
R1344	1-218-692-11	s	METAL, CHIP 1K 0.5% 1/16W
R1345	1-218-692-11	s	METAL, CHIP 1K 0.5% 1/16W
R1346	1-218-702-11	s	METAL, CHIP 2.7K 0.5% 1/16W
R1347	1-216-821-11	s	METAL, CHIP 1K 5% 1/16W
R1348	1-216-813-11	s	METAL, CHIP 220 5% 1/16W
R1349	1-216-829-11	s	METAL, CHIP 4.7K 5% 1/16W
R1350	1-216-825-11	s	METAL, CHIP 2.2K 5% 1/16W
R1351	1-216-821-11	s	METAL, CHIP 1K 5% 1/16W
R1352	1-216-809-11	s	METAL, CHIP 100 5% 1/16W
R1353	1-216-825-11	s	METAL, CHIP 2.2K 5% 1/16W
R1354	1-216-805-11	s	METAL, CHIP 47 5% 1/16W
R1355	1-216-821-11	s	METAL, CHIP 1K 5% 1/16W
R1356	1-218-692-11	s	METAL, CHIP 1K 0.5% 1/16W
R1357	1-216-845-11	s	METAL, CHIP 100K 5% 1/16W
R1358	1-216-833-11	s	METAL, CHIP 10K 5% 1/16W [for PAL]
R1359	1-216-831-11	s	METAL, CHIP 6.8K 5% 1/16W [for PAL]
R1360	1-216-845-11	s	METAL, CHIP 100K 5% 1/16W
R1361	1-216-821-11	s	METAL, CHIP 1K 5% 1/16W [for PAL]
R1362	1-216-821-11	s	METAL, CHIP 1K 5% 1/16W [for PAL]
R1363	1-216-821-11	s	METAL, CHIP 1K 5% 1/16W
R1364	1-216-821-11	s	METAL, CHIP 1K 5% 1/16W
R1365	1-216-837-11	s	METAL, CHIP 22K 5% 1/16W
R1366	1-216-829-11	s	METAL, CHIP 4.7K 5% 1/16W
R1368	1-216-833-11	s	METAL, CHIP 10K 5% 1/16W
R1369	1-216-833-11	s	METAL, CHIP 10K 5% 1/16W
R1370	1-216-809-11	s	METAL, CHIP 100 5% 1/16W
R1371	1-216-845-11	s	METAL, CHIP 100K 5% 1/16W
R1372	1-216-829-11	s	METAL, CHIP 4.7K 5% 1/16W

(DPR-62/62P BOARD)

Ref. No. or Q'ty	Part No.	SP	Description
R1373	1-216-833-11	s	METAL, CHIP 10K 5% 1/16W
R1374	1-216-829-11	s	METAL, CHIP 4.7K 5% 1/16W
R1376	1-216-833-11	s	METAL, CHIP 10K 5% 1/16W
R1378	1-216-825-11	s	METAL, CHIP 2.2K 5% 1/16W
R1379	1-216-845-11	s	METAL, CHIP 100K 5% 1/16W [for NTSC]
	1-216-837-11	s	METAL, CHIP 22K 5% 1/16W [for PAL]
R1380	1-216-817-11	s	METAL, CHIP 470 5% 1/16W
R1382	1-216-833-11	s	METAL, CHIP 10K 5% 1/16W
R1384	1-216-864-11	s	METEL, CHIP 0
R1385	1-216-845-11	s	METAL, CHIP 100K 5% 1/16W [for NTSC]
	1-216-837-11	s	METAL, CHIP 22K 5% 1/16W [for PAL]
R1386	1-216-844-11	s	METAL, CHIP 82K 5% 1/16W [for PAL]
R1387	1-218-702-11	s	METAL, CHIP 2.7K 0.5% 1/16W [for NTSC]
	1-216-829-11	s	METAL, CHIP 4.7K 5% 1/16W [for PAL]
R1388	1-218-699-11	s	METAL, CHIP 2K 0.5% 1/16W [for NTSC]
	1-216-821-11	s	METAL, CHIP 1K 5% 1/16W [for PAL]
R1389	1-216-833-11	s	METAL, CHIP 10K 5% 1/16W
R1390	1-216-839-11	s	METAL, CHIP 33K 5% 1/16W [for NTSC]
	1-216-837-11	s	METAL, CHIP 22K 5% 1/16W [for PAL]
R1391	1-216-833-11	s	METAL, CHIP 10K 5% 1/16W
R1392	1-216-805-11	s	METAL, CHIP 47 5% 1/16W
R1393	1-218-708-11	s	METAL, CHIP 4.7K 0.5% 1/16W
R1394	1-216-805-11	s	METAL, CHIP 47 5% 1/16W
R1395	1-216-809-11	s	METAL, CHIP 100 5% 1/16W
R1396	1-216-809-11	s	METAL, CHIP 100 5% 1/16W
R1397	1-216-839-11	s	METAL, CHIP 33K 5% 1/16W
R1398	1-216-833-11	s	METAL, CHIP 10K 5% 1/16W
R1399	1-216-839-11	s	METAL, CHIP 33K 5% 1/16W
R1400	1-216-833-11	s	METAL, CHIP 10K 5% 1/16W
R1401	1-216-821-11	s	METAL, CHIP 1K 5% 1/16W
R1402	1-218-706-11	s	METAL, CHIP 3.9K 0.5% 1/16W
R1403	1-218-867-11	s	METAL, CHIP 6.8K 0.5% 1/16W
R1404	1-218-704-11	s	METAL, CHIP 3.3K 0.5% 1/16W
R1405	1-218-684-11	s	METAL, CHIP 470 0.5% 1/16W
R1406	1-218-684-11	s	METAL, CHIP 470 0.5% 1/16W
R1407	1-218-716-11	s	METAL, CHIP 10K 0.5% 1/16W
R1408	1-218-881-11	s	METAL, CHIP 27K 0.5% 1/16W
R1409	1-216-833-11	s	METAL, CHIP 10K 5% 1/16W
R1410	1-216-833-11	s	METAL, CHIP 10K 5% 1/16W
R1411	1-218-739-11	s	METAL, CHIP 91K 0.5% 1/16W [for NTSC]
R1412	1-216-864-11	s	METEL, CHIP 0 [for NTSC]
R1413	1-216-809-11	s	METAL, CHIP 100 5% 1/16W
R1414	1-218-738-11	s	METAL, CHIP 82K 0.5% 1/16W [for NTSC]
	1-218-730-11	s	METAL, CHIP 39K 0.5% 1/16W [for PAL]
R1415	1-216-828-11	s	METAL, CHIP 3.9K 5% 1/16W [for PAL]
R1416	1-216-864-11	s	METEL, CHIP 0 [for PAL]
R1417	1-216-831-11	s	METAL, CHIP 6.8K 5% 1/16W [for PAL]
R1418	1-216-827-11	s	METAL, CHIP 3.3K 5% 1/16W [for PAL]
R1419	1-216-817-11	s	METAL, CHIP 470 5% 1/16W [for PAL]
R1420	1-216-845-11	s	METAL, CHIP 100K 5% 1/16W
R1421	1-216-845-11	s	METAL, CHIP 100K 5% 1/16W

(DPR-62/62P BOARD)

Ref. No. or Q'ty	Part No.	SP	Description
R1422	1-216-817-11	s	METAL, CHIP 470 5% 1/16W [for PAL]
R1423	1-216-833-11	s	METAL, CHIP 10K 5% 1/16W [for PAL]
R1424	1-216-838-11	s	METAL, CHIP 27K 5% 1/16W [for PAL]
R1425	1-216-864-11	s	METEL, CHIP 0 [for PAL]
R1426	1-216-864-11	s	METEL, CHIP 0 [for NTSC]
R1427	1-216-829-11	s	METAL, CHIP 4.7K 5% 1/16W
R1428	1-216-833-11	s	METAL, CHIP 10K 5% 1/16W
R1430	1-218-296-11	s	METAL, CHIP 75K 5% 1/16W [for NTSC]
	1-218-738-11	s	METAL, CHIP 82K 0.5% 1/16W [for PAL]
R1431	1-216-817-11	s	METAL, CHIP 470 5% 1/16W
R1432	1-216-833-11	s	METAL, CHIP 10K 5% 1/16W
R1433	1-216-833-11	s	METAL, CHIP 10K 5% 1/16W
R1434	1-216-833-11	s	METAL, CHIP 10K 5% 1/16W
R1435	1-216-809-11	s	METAL, CHIP 100 5% 1/16W
R1436	1-218-716-11	s	METAL, CHIP 10K 0.5% 1/16W
R1437	1-216-833-11	s	METAL, CHIP 10K 5% 1/16W
R1438	1-218-708-11	s	METAL, CHIP 4.7K 0.5% 1/16W
R1439	1-218-881-11	s	METAL, CHIP 27K 0.5% 1/16W
R1440	1-218-873-11	s	METAL, CHIP 12K 0.5% 1/16W [for NTSC]
	1-218-868-11	s	METAL, CHIP 7.5K 0.5% 1/16W [for PAL]
R1441	1-218-700-11	s	METAL, CHIP 2.2K 0.5% 1/16W
R1442	1-218-874-11	s	METAL, CHIP 13K 0.5% 1/16W
R1443	1-218-867-11	s	METAL, CHIP 6.8K 0.5% 1/16W
R1444	1-218-730-11	s	METAL, CHIP 39K 0.5% 1/16W
R1445	1-218-700-11	s	METAL, CHIP 2.2K 0.5% 1/16W
R1446	1-216-821-11	s	METAL, CHIP 1K 5% 1/16W
R1447	1-216-845-11	s	METAL, CHIP 100K 5% 1/16W
R1448	1-216-833-11	s	METAL, CHIP 10K 5% 1/16W
R1449	1-216-837-11	s	METAL, CHIP 22K 5% 1/16W
R1450	1-216-845-11	s	METAL, CHIP 100K 5% 1/16W
R1451	1-216-836-11	s	METAL, CHIP 18K 5% 1/16W
R1452	1-216-864-11	s	METEL, CHIP 0
R1454	1-216-829-11	s	METAL, CHIP 4.7K 5% 1/16W
R1455	1-216-829-11	s	METAL, CHIP 4.7K 5% 1/16W
R1456	1-218-716-11	s	METAL, CHIP 10K 0.5% 1/16W
R1457	1-216-864-11	s	METEL, CHIP 0
R1458	1-218-716-11	s	METAL, CHIP 10K 0.5% 1/16W
R1459	1-216-845-11	s	METAL, CHIP 100K 5% 1/16W
R1462	1-216-809-11	s	METAL, CHIP 100 5% 1/16W
R1463	1-216-809-11	s	METAL, CHIP 100 5% 1/16W
R1464	1-216-809-11	s	METAL, CHIP 100 5% 1/16W
R1465	1-216-805-11	s	METAL, CHIP 47 5% 1/16W
R1467-1478	1-216-805-11	s	METAL, CHIP 47 5% 1/16W
R1481-1489	1-216-864-11	s	METEL, CHIP 0
R1490	1-216-809-11	s	METAL, CHIP 100 5% 1/16W
R1491	1-216-805-11	s	METAL, CHIP 47 5% 1/16W
R1492	1-216-805-11	s	METAL, CHIP 47 5% 1/16W
R1493	1-216-805-11	s	METAL, CHIP 47 5% 1/16W
R1494	1-216-864-11	s	METEL, CHIP 0
R1495	1-216-864-11	s	METEL, CHIP 0
R1496	1-216-834-11	s	METAL, CHIP 12K 5% 1/16W
R1497	1-216-833-11	s	METAL, CHIP 10K 5% 1/16W
R1498	1-216-805-11	s	METAL, CHIP 47 5% 1/16W
R1499	1-216-864-11	s	METEL, CHIP 0

(DPR-62/62P BOARD)

Ref. No. or Q'ty	Part No.	SP	Description
R1500	1-216-805-11	s	METAL, CHIP 47 5% 1/16W
R1501	1-216-805-11	s	METAL, CHIP 47 5% 1/16W
R1502	1-216-805-11	s	METAL, CHIP 47 5% 1/16W
R1503	1-216-864-11	s	METEL, CHIP 0
R1506	1-216-864-11	s	METEL, CHIP 0
R1507-1511	1-216-805-11	s	METAL, CHIP 47 5% 1/16W
R1513	1-216-805-11	s	METAL, CHIP 47 5% 1/16W
R1514	1-216-805-11	s	METAL, CHIP 47 5% 1/16W
R1600	1-216-864-11	s	METEL, CHIP 0
R1601	1-216-864-11	s	METEL, CHIP 0
R1602	1-216-864-11	s	METEL, CHIP 0
R1603	1-216-864-11	s	METEL, CHIP 0
R1605	1-216-864-11	s	METEL, CHIP 0
R1608	1-216-805-11	s	METAL, CHIP 47 5% 1/16W
R1615	1-216-805-11	s	METAL, CHIP 47 5% 1/16W
R1616	1-216-805-11	s	METAL, CHIP 47 5% 1/16W
R1617	1-216-805-11	s	METAL, CHIP 47 5% 1/16W
R1620	1-216-805-11	s	METAL, CHIP 47 5% 1/16W
R1623	1-216-805-11	s	METAL, CHIP 47 5% 1/16W
R1624	1-216-805-11	s	METAL, CHIP 47 5% 1/16W
R1625	1-216-805-11	s	METAL, CHIP 47 5% 1/16W
R1628-1633	1-216-805-11	s	METAL, CHIP 47 5% 1/16W
R1634	1-216-864-11	s	METEL, CHIP 0
R1635	1-216-864-11	s	METEL, CHIP 0
R1636	1-216-864-11	s	METEL, CHIP 0
R1637	1-216-864-11	s	METEL, CHIP 0
R2500	1-216-845-11	s	METAL, CHIP 100K 5% 1/16W
R2502	1-216-864-11	s	METEL, CHIP 0
R2503	1-216-864-11	s	METEL, CHIP 0
R2504	1-216-805-11	s	METAL, CHIP 47 5% 1/16W
R2505	1-216-805-11	s	METAL, CHIP 47 5% 1/16W
R2506	1-216-845-11	s	METAL, CHIP 100K 5% 1/16W
R2507	1-216-845-11	s	METAL, CHIP 100K 5% 1/16W
R2508	1-216-845-11	s	METAL, CHIP 100K 5% 1/16W
R2509	1-216-864-11	s	METEL, CHIP 0
R2510	1-216-845-11	s	METAL, CHIP 100K 5% 1/16W
RB1-6	1-236-907-11	s	NETWORK RESISTOR (CHIP) 100K
RB7-13	1-239-409-11	s	NETWORK RESISTOR (CHIP) 47
RB14	1-236-907-11	s	NETWORK RESISTOR (CHIP) 100K
RB100	1-236-907-11	s	NETWORK RESISTOR (CHIP) 100K
RB101	1-236-907-11	s	NETWORK RESISTOR (CHIP) 100K
RB103-107	1-236-907-11	s	NETWORK RESISTOR (CHIP) 100K
RB108-121	1-239-409-11	s	NETWORK RESISTOR (CHIP) 47
RB122	1-239-711-11	s	NETWORK RESISTOR (CHIP) 0 [for PAL]
RB123	1-239-711-11	s	NETWORK RESISTOR (CHIP) 0 [for PAL]
RB124	1-239-711-11	s	NETWORK RESISTOR (CHIP) 0 [for PAL]
RB125	1-239-711-11	s	NETWORK RESISTOR (CHIP) 0 [for PAL]
RB126-132	1-236-907-11	s	NETWORK RESISTOR (CHIP) 100K
RB200-210	1-239-409-11	s	NETWORK RESISTOR (CHIP) 47
RB300	1-239-711-11	s	NETWORK RESISTOR (CHIP) 0

(DPR-62/62P BOARD)

Ref. No. or Q'ty	Part No.	SP	Description
RB301	1-236-908-11	s	NETWORK RESISTOR (CHIP) 10K
RB302	1-236-908-11	s	NETWORK RESISTOR (CHIP) 10K
RB500	1-236-907-11	s	NETWORK RESISTOR (CHIP) 100K
RB501	1-236-907-11	s	NETWORK RESISTOR (CHIP) 100K
RB505-510	1-239-409-11	s	NETWORK RESISTOR (CHIP) 47
RB600	1-239-430-11	s	NETWORK RESISTOR (CHIP) 4.7K
RB700	1-239-409-11	s	NETWORK RESISTOR (CHIP) 47
RB701	1-239-409-11	s	NETWORK RESISTOR (CHIP) 47
RB702	1-239-711-11	s	NETWORK RESISTOR (CHIP) 0
RB703	1-236-907-11	s	NETWORK RESISTOR (CHIP) 100K
RB704	1-236-907-11	s	NETWORK RESISTOR (CHIP) 100K
RB705	1-236-907-11	s	NETWORK RESISTOR (CHIP) 100K
RB706	1-239-711-11	s	NETWORK RESISTOR (CHIP) 0
RB707	1-239-711-11	s	NETWORK RESISTOR (CHIP) 0
RB800	1-239-711-11	s	NETWORK RESISTOR (CHIP) 0
RB802	1-239-409-11	s	NETWORK RESISTOR (CHIP) 47
RB804	1-239-409-11	s	NETWORK RESISTOR (CHIP) 47
RB805	1-236-907-11	s	NETWORK RESISTOR (CHIP) 100K
RB806	1-236-907-11	s	NETWORK RESISTOR (CHIP) 100K
RB807	1-236-907-11	s	NETWORK RESISTOR (CHIP) 100K
RB808	1-239-409-11	s	NETWORK RESISTOR (CHIP) 47
RB809	1-239-409-11	s	NETWORK RESISTOR (CHIP) 47
RB810	1-239-409-11	s	NETWORK RESISTOR (CHIP) 47
RB811	1-239-409-11	s	NETWORK RESISTOR (CHIP) 47
RB813-817	1-239-409-11	s	NETWORK RESISTOR (CHIP) 47
RB818	1-236-907-11	s	NETWORK RESISTOR (CHIP) 100K
RB819	1-239-711-11	s	NETWORK RESISTOR (CHIP) 0
RB820	1-239-711-11	s	NETWORK RESISTOR (CHIP) 0
RB821	1-239-711-11	s	NETWORK RESISTOR (CHIP) 0
RB822	1-239-711-11	s	NETWORK RESISTOR (CHIP) 0
RB900-914	1-239-428-11	s	NETWORK RESISTOR (CHIP) 3.3K
RB1000	1-236-907-11	s	NETWORK RESISTOR (CHIP) 100K
RB1001	1-236-907-11	s	NETWORK RESISTOR (CHIP) 100K
RB1003	1-236-907-11	s	NETWORK RESISTOR (CHIP) 100K
RB1004	1-239-409-11	s	NETWORK RESISTOR (CHIP) 47
RB1100	1-239-711-11	s	NETWORK RESISTOR (CHIP) 0
RB1101	1-239-711-11	s	NETWORK RESISTOR (CHIP) 0
RB1102	1-239-711-11	s	NETWORK RESISTOR (CHIP) 0
RB1103	1-236-907-11	s	NETWORK RESISTOR (CHIP) 100K
RB1104	1-236-907-11	s	NETWORK RESISTOR (CHIP) 100K
RB1105	1-239-711-11	s	NETWORK RESISTOR (CHIP) 0
RB1200-1207	1-239-428-11	s	NETWORK RESISTOR (CHIP) 3.3K
RB2500	1-236-907-11	s	NETWORK RESISTOR (CHIP) 100K
RB2501-2518	1-239-409-11	s	NETWORK RESISTOR (CHIP) 47
RB2519	1-236-907-11	s	NETWORK RESISTOR (CHIP) 100K
RB2520	1-236-907-11	s	NETWORK RESISTOR (CHIP) 100K

DUS-339 BOARD

Ref. No. or Q'ty	Part No.	SP	Description
1pc	A-8272-757-A	o	MOUNTED CIRCUIT BOARD, DUS-339
CN432	1-566-759-11	o	CONNECTOR 4P, MALE
Q1	8-729-209-07	s	TRANSISTOR 2SC4213-B
Q2	8-729-209-07	s	TRANSISTOR 2SC4213-B
Q3	8-729-209-07	s	TRANSISTOR 2SC4213-B
Q4	8-729-209-07	s	TRANSISTOR 2SC4213-B
R1	1-216-805-11	s	METAL, CHIP 47 5% 1/16W
R2	1-216-805-11	s	METAL, CHIP 47 5% 1/16W
R3	1-216-829-11	s	METAL, CHIP 4.7K 5% 1/16W
R4	1-216-829-11	s	METAL, CHIP 4.7K 5% 1/16W
R5	1-216-805-11	s	METAL, CHIP 47 5% 1/16W
R6	1-216-805-11	s	METAL, CHIP 47 5% 1/16W
R7	1-216-829-11	s	METAL, CHIP 4.7K 5% 1/16W
R8	1-216-829-11	s	METAL, CHIP 4.7K 5% 1/16W

EQ-54 BOARD

Ref. No. or Q'ty	Part No.	SP	Description
1pc	A-8276-922-A	o	MOUNTED CIRCUIT BOARD, EQ-54
1pc	3-691-503-02	o	CASE,SHIELD LA
C100	1-162-921-11	s	CERAMIC, CHIP 33PF 5% 50V
C101	1-164-156-11	s	CERAMIC, CHIP 0.1uF 25V
C102	1-164-156-11	s	CERAMIC, CHIP 0.1uF 25V
C104	1-162-915-11	s	CERAMIC, CHIP 10PF 50V
C105	1-135-215-21	s	TANTALUM, CHIP 6.8uF 10% 16V
C106	1-164-156-11	s	CERAMIC, CHIP 0.1uF 25V
C108	1-162-915-11	s	CERAMIC, CHIP 10PF 50V
C109	1-164-156-11	s	CERAMIC, CHIP 0.1uF 25V
C110	1-164-156-11	s	CERAMIC, CHIP 0.1uF 25V
C111	1-164-156-11	s	CERAMIC, CHIP 0.1uF 25V
C112	1-162-922-11	s	CERAMIC, CHIP 39PF 5% 50V
C113	1-162-967-11	s	CERAMIC, CHIP 0.0033uF 10% 50V
C114	1-162-910-11	s	CERAMIC, CHIP 5PF 50V
C115	1-164-156-11	s	CERAMIC, CHIP 0.1uF 25V
C116	1-135-215-21	s	TANTALUM, CHIP 6.8uF 10% 16V
C117	1-164-505-11	s	CERAMIC 2.2uF 16V
C118	1-164-156-11	s	CERAMIC, CHIP 0.1uF 25V
C119	1-164-156-11	s	CERAMIC, CHIP 0.1uF 25V
C120	1-164-505-11	s	CERAMIC 2.2uF 16V
C121-126	1-164-156-11	s	CERAMIC, CHIP 0.1uF 25V
C127	1-163-275-11	s	CERAMIC, CHIP 0.001uF 5% 50V
C128	1-164-156-11	s	CERAMIC, CHIP 0.1uF 25V
C129	1-164-156-11	s	CERAMIC, CHIP 0.1uF 25V
C131	1-164-156-11	s	CERAMIC, CHIP 0.1uF 25V
C132	1-164-156-11	s	CERAMIC, CHIP 0.1uF 25V
C133	1-164-505-11	s	CERAMIC 2.2uF 16V
C134	1-135-215-21	s	TANTALUM, CHIP 6.8uF 10% 16V
C135	1-164-156-11	s	CERAMIC, CHIP 0.1uF 25V
C136	1-135-215-21	s	TANTALUM, CHIP 6.8uF 10% 16V
C138	1-135-215-21	s	TANTALUM, CHIP 6.8uF 10% 16V
C139	1-164-156-11	s	CERAMIC, CHIP 0.1uF 25V
C140	1-164-156-11	s	CERAMIC, CHIP 0.1uF 25V
C141	1-164-156-11	s	CERAMIC, CHIP 0.1uF 25V
C142	1-162-924-11	s	CERAMIC 56PF 5% 50V
C143	1-164-156-11	s	CERAMIC, CHIP 0.1uF 25V
C144	1-164-156-11	s	CERAMIC, CHIP 0.1uF 25V
C145	1-135-215-21	s	TANTALUM, CHIP 6.8uF 10% 16V
C146	1-164-156-11	s	CERAMIC, CHIP 0.1uF 25V
C147	1-164-156-11	s	CERAMIC, CHIP 0.1uF 25V
C148	1-164-156-11	s	CERAMIC, CHIP 0.1uF 25V
C149	1-135-215-21	s	TANTALUM, CHIP 6.8uF 10% 16V
C150	1-135-145-11	s	TANTALUM, CHIP 0.47uF 10% 35V
C151-156	1-164-156-11	s	CERAMIC, CHIP 0.1uF 25V
C157	1-162-969-11	s	CERAMIC, CHIP 0.0068uF 10% 25V
C158	1-162-918-11	s	CERAMIC, CHIP 18PF 5% 50V
C200	1-162-921-11	s	CERAMIC, CHIP 33PF 5% 50V
C201	1-164-156-11	s	CERAMIC, CHIP 0.1uF 25V
C202	1-164-156-11	s	CERAMIC, CHIP 0.1uF 25V
C204	1-162-915-11	s	CERAMIC, CHIP 10PF 50V
C205	1-135-215-21	s	TANTALUM, CHIP 6.8uF 10% 16V
C206	1-164-156-11	s	CERAMIC, CHIP 0.1uF 25V
C208	1-162-915-11	s	CERAMIC, CHIP 10PF 50V
C209	1-164-156-11	s	CERAMIC, CHIP 0.1uF 25V
C210	1-164-156-11	s	CERAMIC, CHIP 0.1uF 25V
C211	1-164-156-11	s	CERAMIC, CHIP 0.1uF 25V
C212	1-162-922-11	s	CERAMIC, CHIP 39PF 5% 50V

(EQ-54 BOARD)

Ref. No. or Q'ty	Part No.	SP	Description
C213	1-162-967-11	s	CERAMIC, CHIP 0.0033uF 10% 50V
C214	1-162-910-11	s	CERAMIC, CHIP 5PF 50V
C215	1-164-156-11	s	CERAMIC, CHIP 0.1uF 25V
C216	1-135-215-21	s	TANTALUM, CHIP 6.8uF 10% 16V
C217	1-164-505-11	s	CERAMIC 2.2uF 16V
C218	1-164-156-11	s	CERAMIC, CHIP 0.1uF 25V
C219	1-164-156-11	s	CERAMIC, CHIP 0.1uF 25V
C220	1-164-505-11	s	CERAMIC 2.2uF 16V
C221-226	1-164-156-11	s	CERAMIC, CHIP 0.1uF 25V
C227	1-163-275-11	s	CERAMIC, CHIP 0.001uF 5% 50V
C228	1-164-156-11	s	CERAMIC, CHIP 0.1uF 25V
C229	1-164-156-11	s	CERAMIC, CHIP 0.1uF 25V
C231	1-164-156-11	s	CERAMIC, CHIP 0.1uF 25V
C232	1-164-156-11	s	CERAMIC, CHIP 0.1uF 25V
C233	1-164-505-11	s	CERAMIC 2.2uF 16V
C234	1-135-215-21	s	TANTALUM, CHIP 6.8uF 10% 16V
C235	1-164-156-11	s	CERAMIC, CHIP 0.1uF 25V
C236	1-135-215-21	s	TANTALUM, CHIP 6.8uF 10% 16V
C238	1-135-215-21	s	TANTALUM, CHIP 6.8uF 10% 16V
C239	1-164-156-11	s	CERAMIC, CHIP 0.1uF 25V
C240	1-164-156-11	s	CERAMIC, CHIP 0.1uF 25V
C241	1-164-156-11	s	CERAMIC, CHIP 0.1uF 25V
C242	1-162-924-11	s	CERAMIC 56PF 5% 50V
C243	1-164-156-11	s	CERAMIC, CHIP 0.1uF 25V
C244	1-164-156-11	s	CERAMIC, CHIP 0.1uF 25V
C245	1-135-215-21	s	TANTALUM, CHIP 6.8uF 10% 16V
C246	1-164-156-11	s	CERAMIC, CHIP 0.1uF 25V
C247	1-164-156-11	s	CERAMIC, CHIP 0.1uF 25V
C248	1-164-156-11	s	CERAMIC, CHIP 0.1uF 25V
C249	1-135-215-21	s	TANTALUM, CHIP 6.8uF 10% 16V
C250	1-135-145-11	s	TANTALUM, CHIP 0.47uF 10% 35V
C251	1-164-156-11	s	CERAMIC, CHIP 0.1uF 25V
C254	1-164-156-11	s	CERAMIC, CHIP 0.1uF 25V
C255	1-164-156-11	s	CERAMIC, CHIP 0.1uF 25V
C257	1-162-969-11	s	CERAMIC, CHIP 0.0068uF 10% 25V
C258	1-162-918-11	s	CERAMIC, CHIP 18PF 5% 50V
C300	1-162-921-11	s	CERAMIC, CHIP 33PF 5% 50V
C301	1-164-156-11	s	CERAMIC, CHIP 0.1uF 25V
C302	1-164-156-11	s	CERAMIC, CHIP 0.1uF 25V
C304	1-162-915-11	s	CERAMIC, CHIP 10PF 50V
C305	1-135-215-21	s	TANTALUM, CHIP 6.8uF 10% 16V
C306	1-164-156-11	s	CERAMIC, CHIP 0.1uF 25V
C308	1-162-915-11	s	CERAMIC, CHIP 10PF 50V
C309	1-164-156-11	s	CERAMIC, CHIP 0.1uF 25V
C310	1-164-156-11	s	CERAMIC, CHIP 0.1uF 25V
C311	1-164-156-11	s	CERAMIC, CHIP 0.1uF 25V
C312	1-162-922-11	s	CERAMIC, CHIP 39PF 5% 50V
C313	1-162-967-11	s	CERAMIC, CHIP 0.0033uF 10% 50V
C314	1-162-910-11	s	CERAMIC, CHIP 5PF 50V
C315	1-164-156-11	s	CERAMIC, CHIP 0.1uF 25V
C316	1-135-215-21	s	TANTALUM, CHIP 6.8uF 10% 16V
C317	1-164-505-11	s	CERAMIC 2.2uF 16V
C318	1-164-156-11	s	CERAMIC, CHIP 0.1uF 25V
C319	1-164-156-11	s	CERAMIC, CHIP 0.1uF 25V
C320	1-164-505-11	s	CERAMIC 2.2uF 16V
C321-326	1-164-156-11	s	CERAMIC, CHIP 0.1uF 25V
C327	1-163-275-11	s	CERAMIC, CHIP 0.001uF 5% 50V
C328	1-164-156-11	s	CERAMIC, CHIP 0.1uF 25V
C329	1-164-156-11	s	CERAMIC, CHIP 0.1uF 25V

(EQ-54 BOARD)

Ref. No. or Q'ty	Part No.	SP	Description
C331	1-164-156-11	s	CERAMIC, CHIP 0.1uF 25V
C332	1-164-156-11	s	CERAMIC, CHIP 0.1uF 25V
C333	1-164-505-11	s	CERAMIC 2.2uF 16V
C334	1-135-215-21	s	TANTALUM, CHIP 6.8uF 10% 16V
C335	1-164-156-11	s	CERAMIC, CHIP 0.1uF 25V
C336	1-135-215-21	s	TANTALUM, CHIP 6.8uF 10% 16V
C338	1-135-215-21	s	TANTALUM, CHIP 6.8uF 10% 16V
C339	1-164-156-11	s	CERAMIC, CHIP 0.1uF 25V
C340	1-164-156-11	s	CERAMIC, CHIP 0.1uF 25V
C341	1-164-156-11	s	CERAMIC, CHIP 0.1uF 25V
C342	1-162-924-11	s	CERAMIC 56PF 5% 50V
C343	1-164-156-11	s	CERAMIC, CHIP 0.1uF 25V
C344	1-164-156-11	s	CERAMIC, CHIP 0.1uF 25V
C345	1-135-215-21	s	TANTALUM, CHIP 6.8uF 10% 16V
C346	1-164-156-11	s	CERAMIC, CHIP 0.1uF 25V
C347	1-164-156-11	s	CERAMIC, CHIP 0.1uF 25V
C348	1-164-156-11	s	CERAMIC, CHIP 0.1uF 25V
C349	1-135-215-21	s	TANTALUM, CHIP 6.8uF 10% 16V
C350	1-135-145-11	s	TANTALUM, CHIP 0.47uF 10% 35V
C351-356	1-164-156-11	s	CERAMIC, CHIP 0.1uF 25V
C357	1-162-969-11	s	CERAMIC, CHIP 0.0068uF 10% 25V
C358	1-162-918-11	s	CERAMIC, CHIP 18PF 5% 50V
C400	1-162-921-11	s	CERAMIC, CHIP 33PF 5% 50V
C401	1-164-156-11	s	CERAMIC, CHIP 0.1uF 25V
C402	1-164-156-11	s	CERAMIC, CHIP 0.1uF 25V
C404	1-162-915-11	s	CERAMIC, CHIP 10PF 50V
C405	1-135-215-21	s	TANTALUM, CHIP 6.8uF 10% 16V
C406	1-164-156-11	s	CERAMIC, CHIP 0.1uF 25V
C408	1-162-915-11	s	CERAMIC, CHIP 10PF 50V
C409	1-164-156-11	s	CERAMIC, CHIP 0.1uF 25V
C410	1-164-156-11	s	CERAMIC, CHIP 0.1uF 25V
C411	1-164-156-11	s	CERAMIC, CHIP 0.1uF 25V
C412	1-162-922-11	s	CERAMIC, CHIP 39PF 5% 50V
C413	1-162-967-11	s	CERAMIC, CHIP 0.0033uF 10% 50V
C414	1-162-910-11	s	CERAMIC, CHIP 5PF 50V
C415	1-164-156-11	s	CERAMIC, CHIP 0.1uF 25V
C416	1-135-215-21	s	TANTALUM, CHIP 6.8uF 10% 16V
C417	1-164-505-11	s	CERAMIC 2.2uF 16V
C418	1-164-156-11	s	CERAMIC, CHIP 0.1uF 25V
C419	1-164-156-11	s	CERAMIC, CHIP 0.1uF 25V
C420	1-164-505-11	s	CERAMIC 2.2uF 16V
C421-426	1-164-156-11	s	CERAMIC, CHIP 0.1uF 25V
C427	1-163-275-11	s	CERAMIC, CHIP 0.001uF 5% 50V
C428	1-164-156-11	s	CERAMIC, CHIP 0.1uF 25V
C429	1-164-156-11	s	CERAMIC, CHIP 0.1uF 25V
C431	1-164-156-11	s	CERAMIC, CHIP 0.1uF 25V
C432	1-164-156-11	s	CERAMIC, CHIP 0.1uF 25V
C433	1-164-505-11	s	CERAMIC 2.2uF 16V
C434	1-135-215-21	s	TANTALUM, CHIP 6.8uF 10% 16V
C435	1-164-156-11	s	CERAMIC, CHIP 0.1uF 25V
C436	1-135-215-21	s	TANTALUM, CHIP 6.8uF 10% 16V
C438	1-135-215-21	s	TANTALUM, CHIP 6.8uF 10% 16V
C439	1-164-156-11	s	CERAMIC, CHIP 0.1uF 25V
C440	1-164-156-11	s	CERAMIC, CHIP 0.1uF 25V
C441	1-164-156-11	s	CERAMIC, CHIP 0.1uF 25V
C442	1-162-924-11	s	CERAMIC 56PF 5% 50V
C443	1-164-156-11	s	CERAMIC, CHIP 0.1uF 25V
C444	1-164-156-11	s	CERAMIC, CHIP 0.1uF 25V
C445	1-135-215-21	s	TANTALUM, CHIP 6.8uF 10% 16V

(EQ-54 BOARD)

Ref. No. or Q'ty	Part No.	SP	Description
C446	1-164-156-11	s	CERAMIC, CHIP 0.1uF 25V
C447	1-164-156-11	s	CERAMIC, CHIP 0.1uF 25V
C448	1-164-156-11	s	CERAMIC, CHIP 0.1uF 25V
C449	1-135-215-21	s	TANTALUM, CHIP 6.8uF 10% 16V
C450	1-135-145-11	s	TANTALUM, CHIP 0.47uF 10% 35V
C451	1-164-156-11	s	CERAMIC, CHIP 0.1uF 25V
C452	1-164-156-11	s	CERAMIC, CHIP 0.1uF 25V
C453	1-164-156-11	s	CERAMIC, CHIP 0.1uF 25V
C457	1-162-969-11	s	CERAMIC, CHIP 0.0068uF 10% 25V
C458	1-162-918-11	s	CERAMIC, CHIP 18PF 5% 50V
C500	1-104-823-11	s	TANTALUM, CHIP 47uF 20% 16V
C501	1-104-823-11	s	TANTALUM, CHIP 47uF 20% 16V
C504	1-135-215-21	s	TANTALUM, CHIP 6.8uF 10% 16V
C520	1-164-156-11	s	CERAMIC, CHIP 0.1uF 25V
C521	1-164-156-11	s	CERAMIC, CHIP 0.1uF 25V
C530	1-164-156-11	s	CERAMIC, CHIP 0.1uF 25V
C531	1-164-156-11	s	CERAMIC, CHIP 0.1uF 25V
C600	1-104-823-11	s	TANTALUM, CHIP 47uF 20% 16V
C601	1-104-823-11	s	TANTALUM, CHIP 47uF 20% 16V
C604	1-135-215-21	s	TANTALUM, CHIP 6.8uF 10% 16V
C620	1-164-156-11	s	CERAMIC, CHIP 0.1uF 25V
C621	1-164-156-11	s	CERAMIC, CHIP 0.1uF 25V
C630	1-164-156-11	s	CERAMIC, CHIP 0.1uF 25V
C631	1-164-156-11	s	CERAMIC, CHIP 0.1uF 25V
C700	1-162-964-11	s	CERAMIC, CHIP 0.001uF 10% 50V
C701	1-162-964-11	s	CERAMIC, CHIP 0.001uF 10% 50V
C702	1-104-823-11	s	TANTALUM, CHIP 47uF 20% 16V
C710-715	1-164-156-11	s	CERAMIC, CHIP 0.1uF 25V
C800	1-135-145-11	s	TANTALUM, CHIP 0.47uF 10% 35V
C801	1-164-156-11	s	CERAMIC, CHIP 0.1uF 25V
C802	1-164-156-11	s	CERAMIC, CHIP 0.1uF 25V
C803	1-135-201-11	s	TANTALUM, CHIP 10uF 20% 6.3V
C804	1-104-823-11	s	TANTALUM, CHIP 47uF 20% 16V
C805	1-104-823-11	s	TANTALUM, CHIP 47uF 20% 16V
C806	1-164-156-11	s	CERAMIC, CHIP 0.1uF 25V
C807	1-164-156-11	s	CERAMIC, CHIP 0.1uF 25V
C808	1-135-145-11	s	TANTALUM, CHIP 0.47uF 10% 35V
C809	1-135-070-00	s	TANTALUM, CHIP 0.1uF 10% 35V
C810	1-164-315-11	s	CERAMIC, CHIP 470PF 5% 50V
C811	1-107-826-11	s	CERAMIC, CHIP 0.1uF 10% 16V
C812	1-164-156-11	s	CERAMIC, CHIP 0.1uF 25V
C813	1-104-546-11	s	FILM, CHIP 0.0039uF 5% 16V
C814	1-164-315-11	s	CERAMIC, CHIP 470PF 5% 50V
C815	1-164-156-11	s	CERAMIC, CHIP 0.1uF 25V
C816	1-164-156-11	s	CERAMIC, CHIP 0.1uF 25V
C817	1-162-919-11	s	CERAMIC, CHIP 22PF 5% 50V
C818	1-165-176-11	s	CERAMIC 0.047uF 10% 16V
C819	1-163-275-11	s	CERAMIC, CHIP 0.001uF 5% 50V
C820	1-163-275-11	s	CERAMIC, CHIP 0.001uF 5% 50V
C821	1-135-201-11	s	TANTALUM, CHIP 10uF 20% 6.3V
C822	1-135-076-21	s	TANTALUM, CHIP 1uF 10% 35V
C823	1-162-959-11	s	CERAMIC, CHIP 330PF 5% 50V
C824	1-163-139-00	s	CERAMIC, CHIP 820PF 5% 50V
C825	1-164-156-11	s	CERAMIC, CHIP 0.1uF 25V
C826	1-109-899-11	s	CERAMIC, CHIP 330uF 5% 200V
C827	1-164-156-11	s	CERAMIC, CHIP 0.1uF 25V
C828	1-164-156-11	s	CERAMIC, CHIP 0.1uF 25V
C829	1-135-164-21	s	TANTALUM, CHIP 22uF 10% 16V
C830	1-135-201-11	s	TANTALUM, CHIP 10uF 20% 6.3V

(EQ-54 BOARD)

Ref. No. or Q'ty	Part No.	SP	Description
C831	1-164-156-11	s	CERAMIC, CHIP 0.1uF 25V
C832	1-164-156-11	s	CERAMIC, CHIP 0.1uF 25V
C833	1-109-900-11	s	CERAMIC, CHIP 470PF 5% 200V
C834	1-164-156-11	s	CERAMIC, CHIP 0.1uF 25V
C835	1-164-156-11	s	CERAMIC, CHIP 0.1uF 25V
C836	1-135-076-21	s	TANTALUM, CHIP 1uF 10% 35V
C837	1-164-156-11	s	CERAMIC, CHIP 0.1uF 25V
C838	1-164-156-11	s	CERAMIC, CHIP 0.1uF 25V
C839	1-164-217-11	s	CERAMIC, CHIP 150PF 5% 50V
C840	1-104-551-11	s	FILM, CHIP 0.01uF 5% 16V
C841	1-135-202-21	s	TANTALUM, CHIP 22uF 10% 4V
C842	1-135-145-11	s	TANTALUM, CHIP 0.47uF 10% 35V
C845	1-107-826-11	s	CERAMIC, CHIP 0.1uF 10% 16V
C846	1-135-076-21	s	TANTALUM, CHIP 1uF 10% 35V
C847	1-162-959-11	s	CERAMIC, CHIP 330PF 5% 50V
C848	1-135-076-21	s	TANTALUM, CHIP 1uF 10% 35V
C900	1-164-156-11	s	CERAMIC, CHIP 0.1uF 25V
C901	1-164-156-11	s	CERAMIC, CHIP 0.1uF 25V
C902	1-164-156-11	s	CERAMIC, CHIP 0.1uF 25V
C905	1-104-823-11	s	TANTALUM, CHIP 47uF 20% 16V
C906	1-104-823-11	s	TANTALUM, CHIP 47uF 20% 16V
C907	1-104-823-11	s	TANTALUM, CHIP 47uF 20% 16V
C908	1-164-156-11	s	CERAMIC, CHIP 0.1uF 25V
C909	1-164-156-11	s	CERAMIC, CHIP 0.1uF 25V
C910	1-164-156-11	s	CERAMIC, CHIP 0.1uF 25V
CN301	1-564-005-11	o	CONNECTOR 6P, MALE
CN302	1-566-759-11	o	CONNECTOR 4P, MALE
CN303	1-506-471-11	s	CONNECTOR 6P, MALE
CN304	1-506-468-11	s	CONNECTOR 3P, MALE
CN906	1-774-269-11	s	CONNECTOR, BOARD TO BOARD 30P
CN907	1-774-269-11	s	CONNECTOR, BOARD TO BOARD 30P
CT800	1-426-884-11	s	TRANSFORMER, BIAS OSCILLATION
CV100	1-141-327-11	s	CAP, VAR, TRIMMER, CHIP 10PF
CV200	1-141-327-11	s	CAP, VAR, TRIMMER, CHIP 10PF
CV300	1-141-327-11	s	CAP, VAR, TRIMMER, CHIP 10PF
CV400	1-141-327-11	s	CAP, VAR, TRIMMER, CHIP 10PF
CV800	1-141-365-11	s	CAP, TRIMMER 100PF
D100	8-719-029-64	s	DIODE RD4.7UH-T1
D101	8-719-800-76	s	DIODE 1SS226
D102	8-719-029-61	s	DIODE RD3.6UH-T1
D200	8-719-029-64	s	DIODE RD4.7UH-T1
D201	8-719-800-76	s	DIODE 1SS226
D202	8-719-029-61	s	DIODE RD3.6UH-T1
D300	8-719-029-64	s	DIODE RD4.7UH-T1
D301	8-719-800-76	s	DIODE 1SS226
D302	8-719-029-61	s	DIODE RD3.6UH-T1
D400	8-719-029-64	s	DIODE RD4.7UH-T1
D401	8-719-800-76	s	DIODE 1SS226
D402	8-719-029-61	s	DIODE RD3.6UH-T1
D530	8-719-029-62	s	DIODE RD3.9UH-T1
D630	8-719-029-62	s	DIODE RD3.9UH-T1
D800	8-719-941-86	s	DIODE DAN202U
D801	8-719-941-86	s	DIODE DAN202U
IC100	8-759-260-55	s	IC TLC272CPW-E05
IC101	8-752-073-98	s	IC CXA3034Q
IC102	8-759-260-55	s	IC TLC272CPW-E05
IC103	8-752-066-44	s	IC CXA1805Q

(EQ-54 BOARD)

Ref. No. or Q'ty	Part No.	SP	Description
IC104	8-759-079-49	s	IC TC74VHC04FS(EL)
IC105	8-752-371-18	s	IC CXD2302Q
IC106	8-759-079-97	s	IC TC74VHC374FS(EL)
IC200	8-759-260-55	s	IC TLC272CPW-E05
IC201	8-752-073-98	s	IC CXA3034Q
IC203	8-752-066-44	s	IC CXA1805Q
IC205	8-752-371-18	s	IC CXD2302Q
IC206	8-759-079-97	s	IC TC74VHC374FS(EL)
IC300	8-759-260-55	s	IC TLC272CPW-E05
IC301	8-752-073-98	s	IC CXA3034Q
IC302	8-759-260-55	s	IC TLC272CPW-E05
IC303	8-752-066-44	s	IC CXA1805Q
IC304	8-759-079-49	s	IC TC74VHC04FS(EL)
IC305	8-752-371-18	s	IC CXD2302Q
IC306	8-759-079-97	s	IC TC74VHC374FS(EL)
IC400	8-759-260-55	s	IC TLC272CPW-E05
IC401	8-752-073-98	s	IC CXA3034Q
IC403	8-752-066-44	s	IC CXA1805Q
IC405	8-752-371-18	s	IC CXD2302Q
IC406	8-759-079-97	s	IC TC74VHC374FS(EL)
IC500	8-759-173-13	s	IC CXD8815Q
IC501	8-759-635-27	s	IC M62352GP
IC600	8-759-173-13	s	IC CXD8815Q
IC601	8-759-635-27	s	IC M62352GP
IC700	8-759-269-09	s	IC SN74HCT04ANS
IC701	8-759-925-85	s	IC SN74HC32ANS
IC702	8-759-926-67	s	IC SN74HC374ANS
IC705	8-759-926-29	s	IC SN74HC175ANS
IC706	8-759-925-76	s	IC SN74HC08ANS
IC708	8-759-008-50	s	IC MC74HC112F
IC800	8-759-079-49	s	IC TC74VHC04FS(EL)
IC801	8-759-710-28	s	IC NJM4565M-A
IC802	8-759-079-46	s	IC TC74VHC00FS(EL)
IC803	8-759-710-28	s	IC NJM4565M-A
IC804	8-759-710-28	s	IC NJM4565M-A
IC805	8-759-066-61	s	IC TC4053BFS
IC806	8-759-710-28	s	IC NJM4565M-A
L100	1-410-658-31	s	INDUCTOR, CHIP 220UH
L101	1-410-991-11	s	INDUCTOR CHIP 0.68uH
L102	1-410-987-11	s	INDUCTOR CHIP 0.33uH
L200	1-410-658-31	s	INDUCTOR, CHIP 220UH
L201	1-410-991-11	s	INDUCTOR CHIP 0.68uH
L202	1-410-987-11	s	INDUCTOR CHIP 0.33uH
L300	1-410-658-31	s	INDUCTOR, CHIP 220UH
L301	1-410-991-11	s	INDUCTOR CHIP 0.68uH
L302	1-410-987-11	s	INDUCTOR CHIP 0.33uH
L400	1-410-658-31	s	INDUCTOR, CHIP 220UH
L401	1-410-991-11	s	INDUCTOR CHIP 0.68uH
L402	1-410-987-11	s	INDUCTOR CHIP 0.33uH
L800	1-409-579-11	s	COIL, CHOKE 8.2uH
L801	1-409-579-11	s	COIL, CHOKE 8.2uH
L802	1-408-785-21	s	INDUCTOR, CHIP 47uH
L900	1-409-579-11	s	COIL, CHOKE 8.2uH
L901	1-409-579-11	s	COIL, CHOKE 8.2uH
L902	1-409-579-11	s	COIL, CHOKE 8.2uH
LV800	1-410-853-21	s	COIL, VAR 4.5uH
Q100	8-729-029-14	s	TRANSISTOR DTC144EUA-T106

(EQ-54 BOARD)

Ref. No. or Q'ty	Part No.	SP	Description
Q101	8-729-140-47	s	TRANSISTOR 2SC3735-B34
Q110	8-729-027-54	s	TRANSISTOR DTC124XKA-T146
Q200	8-729-029-14	s	TRANSISTOR DTC144EUA-T106
Q201	8-729-140-47	s	TRANSISTOR 2SC3735-B34
Q210	8-729-027-54	s	TRANSISTOR DTC124XKA-T146
Q300	8-729-029-14	s	TRANSISTOR DTC144EUA-T106
Q301	8-729-140-47	s	TRANSISTOR 2SC3735-B34
Q310	8-729-027-54	s	TRANSISTOR DTC124XKA-T146
Q400	8-729-029-14	s	TRANSISTOR DTC144EUA-T106
Q401	8-729-140-47	s	TRANSISTOR 2SC3735-B34
Q410	8-729-027-54	s	TRANSISTOR DTC124XKA-T146
Q500	8-729-028-91	s	TRANSISTOR DTA144EUA-T106
Q501	8-729-029-14	s	TRANSISTOR DTC144EUA-T106
Q502	8-729-824-34	s	TRANSISTOR 2SJ187
Q503	8-729-145-14	s	TRANSISTOR 2SK1483
Q504	8-729-905-09	s	TRANSISTOR DTA144WUT106
Q505	8-729-905-15	s	TRANSISTOR DTC144WUT106
Q506	8-729-824-34	s	TRANSISTOR 2SJ187
Q507	8-729-145-14	s	TRANSISTOR 2SK1483
Q508	8-729-824-34	s	TRANSISTOR 2SJ187
Q600	8-729-028-91	s	TRANSISTOR DTA144EUA-T106
Q601	8-729-029-14	s	TRANSISTOR DTC144EUA-T106
Q602	8-729-824-34	s	TRANSISTOR 2SJ187
Q603	8-729-145-14	s	TRANSISTOR 2SK1483
Q604	8-729-905-09	s	TRANSISTOR DTA144WUT106
Q605	8-729-905-15	s	TRANSISTOR DTC144WUT106
Q606	8-729-824-34	s	TRANSISTOR 2SJ187
Q607	8-729-145-14	s	TRANSISTOR 2SK1483
Q608	8-729-824-34	s	TRANSISTOR 2SJ187
Q700	8-729-028-91	s	TRANSISTOR DTA144EUA-T106
Q701	8-729-028-91	s	TRANSISTOR DTA144EUA-T106
Q702	8-729-029-14	s	TRANSISTOR DTC144EUA-T106
Q703	8-729-120-53	s	TRANSISTOR 2SJ132-Z
Q704	8-729-118-70	s	TRANSISTOR 2SK739-Z
Q800	8-729-140-63	s	TRANSISTOR 2SA1611-M5M6
Q801	8-729-209-07	s	TRANSISTOR 2SC4213-B
Q802	8-729-105-08	s	TRANSISTOR 2SA1330
Q803	8-729-029-14	s	TRANSISTOR DTC144EUA-T106
Q804	8-729-824-34	s	TRANSISTOR 2SJ187
Q805	8-729-105-36	s	TRANSISTOR 2SC3360-N15
Q806	8-729-105-36	s	TRANSISTOR 2SC3360-N15
Q807	8-729-209-07	s	TRANSISTOR 2SC4213-B
Q808	8-729-209-07	s	TRANSISTOR 2SC4213-B
Q809	8-729-105-36	s	TRANSISTOR 2SC3360-N15
Q810	8-729-105-36	s	TRANSISTOR 2SC3360-N15
Q811	8-729-209-07	s	TRANSISTOR 2SC4213-B
Q812	8-729-209-07	s	TRANSISTOR 2SC4213-B
R100	1-211-977-11	s	METAL, CHIP 22 0.5% 1/16W
R101	1-211-969-11	s	METAL, CHIP 10 0.5% 1/16W
R102	1-211-969-11	s	METAL, CHIP 10 0.5% 1/16W
R103	1-218-851-11	s	METAL, CHIP 1.5K 0.5% 1/16W
R104	1-218-716-11	s	METAL, CHIP 10K 0.5% 1/16W
R106	1-218-851-11	s	METAL, CHIP 1.5K 0.5% 1/16W
R109	1-218-716-11	s	METAL, CHIP 10K 0.5% 1/16W
R110	1-218-684-11	s	METAL, CHIP 470 0.5% 1/16W
R111	1-218-684-11	s	METAL, CHIP 470 0.5% 1/16W
R112	1-218-836-11	s	METAL, CHIP 360 0.5% 1/16W
R113	1-218-698-11	s	METAL, CHIP 1.8K 0.5% 1/16W

(EQ-54 BOARD)

Ref. No. or Q'ty	Part No.	SP	Description
R114	1-218-698-11	s	METAL, CHIP 1.8K 0.5% 1/16W
R115	1-218-698-11	s	METAL, CHIP 1.8K 0.5% 1/16W
R116	1-211-969-11	s	METAL, CHIP 10 0.5% 1/16W
R117	1-218-844-11	s	METAL, CHIP 750 0.5% 1/16W
R118	1-218-668-11	s	METAL, CHIP 100 0.5% 1/16W
R119	1-218-836-11	s	METAL, CHIP 360 0.5% 1/16W
R121	1-218-668-11	s	METAL, CHIP 100 0.5% 1/16W
R122	1-218-668-11	s	METAL, CHIP 100 0.5% 1/16W
R123	1-218-856-11	s	METAL, CHIP 2.4K 0.5% 1/16W
R125	1-218-710-11	s	METAL, CHIP 5.6K 0.5% 1/16W
R126	1-218-897-11	s	METAL, CHIP 120K 0.5% 1/16W
R128	1-218-668-11	s	METAL, CHIP 100 0.5% 1/16W
R129	1-218-864-11	s	METAL, CHIP 5.1K 0.5% 1/16W
R130	1-218-881-11	s	METAL, CHIP 27K 0.5% 1/16W
R131	1-218-851-11	s	METAL, CHIP 1.5K 0.5% 1/16W
R132	1-218-851-11	s	METAL, CHIP 1.5K 0.5% 1/16W
R133	1-218-707-11	s	METAL, CHIP 4.3K 0.5% 1/16W
R134	1-218-702-11	s	METAL, CHIP 2.7K 0.5% 1/16W
R135	1-218-716-11	s	METAL, CHIP 10K 0.5% 1/16W
R136	1-218-698-11	s	METAL, CHIP 1.8K 0.5% 1/16W
R137	1-218-698-11	s	METAL, CHIP 1.8K 0.5% 1/16W
R138	1-211-969-11	s	METAL, CHIP 10 0.5% 1/16W
R139	1-218-692-11	s	METAL, CHIP 1K 0.5% 1/16W
R140	1-218-851-11	s	METAL, CHIP 1.5K 0.5% 1/16W
R141	1-218-660-11	s	METAL, CHIP 47 0.5% 1/16W
R142	1-218-660-11	s	METAL, CHIP 47 0.5% 1/16W
R143	1-218-752-11	s	METAL, CHIP 330K 0.5% 1/16W
R144	1-218-752-11	s	METAL, CHIP 330K 0.5% 1/16W
R145	1-218-694-11	s	METAL, CHIP 1.2K 0.5% 1/16W
R146	1-218-716-11	s	METAL, CHIP 10K 0.5% 1/16W
R147	1-218-692-11	s	METAL, CHIP 1K 0.5% 1/16W
R148	1-218-716-11	s	METAL, CHIP 10K 0.5% 1/16W
R149	1-218-840-11	s	METAL, CHIP 510 0.5% 1/16W
R150	1-218-883-11	s	METAL, CHIP 33K 0.5% 1/16W
R151	1-211-969-11	s	METAL, CHIP 10 0.5% 1/16W
R152	1-218-836-11	s	METAL, CHIP 360 0.5% 1/16W
R153	1-218-868-11	s	METAL, CHIP 7.5K 0.5% 1/16W
R155	1-211-990-11	s	METAL, CHIP 75 0.5% 1/16W
R157	1-218-838-11	s	METAL, CHIP 430 0.5% 1/16W
R158	1-211-969-11	s	METAL, CHIP 10 0.5% 1/16W
R160	1-218-752-11	s	METAL, CHIP 330K 0.5% 1/16W
R161	1-218-752-11	s	METAL, CHIP 330K 0.5% 1/16W
R163	1-211-977-11	s	METAL, CHIP 22 0.5% 1/16W
R164	1-218-874-11	s	METAL, CHIP 13K 0.5% 1/16W
R165	1-218-692-11	s	METAL, CHIP 1K 0.5% 1/16W
R166	1-211-969-11	s	METAL, CHIP 10 0.5% 1/16W
R167	1-218-668-11	s	METAL, CHIP 100 0.5% 1/16W
R169	1-216-603-11	s	METAL, CHIP 10 0.5% 1/10W
R200	1-211-977-11	s	METAL, CHIP 22 0.5% 1/16W
R201	1-211-969-11	s	METAL, CHIP 10 0.5% 1/16W
R202	1-211-969-11	s	METAL, CHIP 10 0.5% 1/16W
R203	1-218-851-11	s	METAL, CHIP 1.5K 0.5% 1/16W
R204	1-218-716-11	s	METAL, CHIP 10K 0.5% 1/16W
R206	1-218-851-11	s	METAL, CHIP 1.5K 0.5% 1/16W
R209	1-218-716-11	s	METAL, CHIP 10K 0.5% 1/16W
R210	1-218-684-11	s	METAL, CHIP 470 0.5% 1/16W
R211	1-218-684-11	s	METAL, CHIP 470 0.5% 1/16W
R212	1-218-836-11	s	METAL, CHIP 360 0.5% 1/16W
R213	1-218-698-11	s	METAL, CHIP 1.8K 0.5% 1/16W

(EQ-54 BOARD)

Ref. No. or Q'ty	Part No.	SP	Description
R214	1-218-698-11	s	METAL, CHIP 1.8K 0.5% 1/16W
R215	1-218-698-11	s	METAL, CHIP 1.8K 0.5% 1/16W
R216	1-211-969-11	s	METAL, CHIP 10 0.5% 1/16W
R217	1-218-844-11	s	METAL, CHIP 750 0.5% 1/16W
R218	1-218-668-11	s	METAL, CHIP 100 0.5% 1/16W
R219	1-218-836-11	s	METAL, CHIP 360 0.5% 1/16W
R221	1-218-668-11	s	METAL, CHIP 100 0.5% 1/16W
R222	1-218-668-11	s	METAL, CHIP 100 0.5% 1/16W
R223	1-218-856-11	s	METAL, CHIP 2.4K 0.5% 1/16W
R225	1-218-710-11	s	METAL, CHIP 5.6K 0.5% 1/16W
R226	1-218-897-11	s	METAL, CHIP 120K 0.5% 1/16W
R228	1-218-668-11	s	METAL, CHIP 100 0.5% 1/16W
R229	1-218-864-11	s	METAL, CHIP 5.1K 0.5% 1/16W
R230	1-218-881-11	s	METAL, CHIP 27K 0.5% 1/16W
R231	1-218-851-11	s	METAL, CHIP 1.5K 0.5% 1/16W
R232	1-218-851-11	s	METAL, CHIP 1.5K 0.5% 1/16W
R233	1-218-707-11	s	METAL, CHIP 4.3K 0.5% 1/16W
R234	1-218-702-11	s	METAL, CHIP 2.7K 0.5% 1/16W
R235	1-218-716-11	s	METAL, CHIP 10K 0.5% 1/16W
R236	1-218-698-11	s	METAL, CHIP 1.8K 0.5% 1/16W
R237	1-218-698-11	s	METAL, CHIP 1.8K 0.5% 1/16W
R238	1-211-969-11	s	METAL, CHIP 10 0.5% 1/16W
R239	1-218-692-11	s	METAL, CHIP 1K 0.5% 1/16W
R240	1-218-851-11	s	METAL, CHIP 1.5K 0.5% 1/16W
R241	1-218-660-11	s	METAL, CHIP 47 0.5% 1/16W
R242	1-218-660-11	s	METAL, CHIP 47 0.5% 1/16W
R243	1-218-752-11	s	METAL, CHIP 330K 0.5% 1/16W
R244	1-218-752-11	s	METAL, CHIP 330K 0.5% 1/16W
R245	1-218-694-11	s	METAL, CHIP 1.2K 0.5% 1/16W
R246	1-218-716-11	s	METAL, CHIP 10K 0.5% 1/16W
R247	1-218-692-11	s	METAL, CHIP 1K 0.5% 1/16W
R248	1-218-716-11	s	METAL, CHIP 10K 0.5% 1/16W
R249	1-218-840-11	s	METAL, CHIP 510 0.5% 1/16W
R250	1-218-883-11	s	METAL, CHIP 33K 0.5% 1/16W
R251	1-211-969-11	s	METAL, CHIP 10 0.5% 1/16W
R252	1-218-836-11	s	METAL, CHIP 360 0.5% 1/16W
R253	1-218-868-11	s	METAL, CHIP 7.5K 0.5% 1/16W
R255	1-211-990-11	s	METAL, CHIP 75 0.5% 1/16W
R257	1-218-838-11	s	METAL, CHIP 430 0.5% 1/16W
R258	1-211-969-11	s	METAL, CHIP 10 0.5% 1/16W
R260	1-218-752-11	s	METAL, CHIP 330K 0.5% 1/16W
R261	1-218-752-11	s	METAL, CHIP 330K 0.5% 1/16W
R263	1-211-977-11	s	METAL, CHIP 22 0.5% 1/16W
R264	1-218-874-11	s	METAL, CHIP 13K 0.5% 1/16W
R265	1-218-692-11	s	METAL, CHIP 1K 0.5% 1/16W
R266	1-211-969-11	s	METAL, CHIP 10 0.5% 1/16W
R267	1-218-668-11	s	METAL, CHIP 100 0.5% 1/16W
R269	1-216-603-11	s	METAL, CHIP 10 0.5% 1/10W
R300	1-211-977-11	s	METAL, CHIP 22 0.5% 1/16W
R301	1-211-969-11	s	METAL, CHIP 10 0.5% 1/16W
R302	1-211-969-11	s	METAL, CHIP 10 0.5% 1/16W
R303	1-218-851-11	s	METAL, CHIP 1.5K 0.5% 1/16W
R304	1-218-716-11	s	METAL, CHIP 10K 0.5% 1/16W
R306	1-218-851-11	s	METAL, CHIP 1.5K 0.5% 1/16W
R309	1-218-716-11	s	METAL, CHIP 10K 0.5% 1/16W
R310	1-218-684-11	s	METAL, CHIP 470 0.5% 1/16W
R311	1-218-684-11	s	METAL, CHIP 470 0.5% 1/16W
R312	1-218-836-11	s	METAL, CHIP 360 0.5% 1/16W
R313	1-218-698-11	s	METAL, CHIP 1.8K 0.5% 1/16W

(EQ-54 BOARD)

Ref. No. or Q'ty	Part No.	SP	Description
R314	1-218-698-11	s	METAL, CHIP 1.8K 0.5% 1/16W
R315	1-218-698-11	s	METAL, CHIP 1.8K 0.5% 1/16W
R316	1-211-969-11	s	METAL, CHIP 10 0.5% 1/16W
R317	1-218-844-11	s	METAL, CHIP 750 0.5% 1/16W
R318	1-218-668-11	s	METAL, CHIP 100 0.5% 1/16W
R319	1-218-836-11	s	METAL, CHIP 360 0.5% 1/16W
R321	1-218-668-11	s	METAL, CHIP 100 0.5% 1/16W
R322	1-218-668-11	s	METAL, CHIP 100 0.5% 1/16W
R323	1-218-856-11	s	METAL, CHIP 2.4K 0.5% 1/16W
R325	1-218-710-11	s	METAL, CHIP 5.6K 0.5% 1/16W
R326	1-218-897-11	s	METAL, CHIP 120K 0.5% 1/16W
R328	1-218-668-11	s	METAL, CHIP 100 0.5% 1/16W
R329	1-218-864-11	s	METAL, CHIP 5.1K 0.5% 1/16W
R330	1-218-881-11	s	METAL, CHIP 27K 0.5% 1/16W
R331	1-218-851-11	s	METAL, CHIP 1.5K 0.5% 1/16W
R332	1-218-851-11	s	METAL, CHIP 1.5K 0.5% 1/16W
R333	1-218-707-11	s	METAL, CHIP 4.3K 0.5% 1/16W
R334	1-218-702-11	s	METAL, CHIP 2.7K 0.5% 1/16W
R335	1-218-716-11	s	METAL, CHIP 10K 0.5% 1/16W
R336	1-218-698-11	s	METAL, CHIP 1.8K 0.5% 1/16W
R337	1-218-698-11	s	METAL, CHIP 1.8K 0.5% 1/16W
R338	1-211-969-11	s	METAL, CHIP 10 0.5% 1/16W
R339	1-218-692-11	s	METAL, CHIP 1K 0.5% 1/16W
R340	1-218-851-11	s	METAL, CHIP 1.5K 0.5% 1/16W
R341	1-218-660-11	s	METAL, CHIP 47 0.5% 1/16W
R342	1-218-660-11	s	METAL, CHIP 47 0.5% 1/16W
R343	1-218-752-11	s	METAL, CHIP 330K 0.5% 1/16W
R344	1-218-752-11	s	METAL, CHIP 330K 0.5% 1/16W
R345	1-218-694-11	s	METAL, CHIP 1.2K 0.5% 1/16W
R346	1-218-716-11	s	METAL, CHIP 10K 0.5% 1/16W
R347	1-218-692-11	s	METAL, CHIP 1K 0.5% 1/16W
R348	1-218-716-11	s	METAL, CHIP 10K 0.5% 1/16W
R349	1-218-840-11	s	METAL, CHIP 510 0.5% 1/16W
R350	1-218-883-11	s	METAL, CHIP 33K 0.5% 1/16W
R351	1-211-969-11	s	METAL, CHIP 10 0.5% 1/16W
R352	1-218-836-11	s	METAL, CHIP 360 0.5% 1/16W
R353	1-218-868-11	s	METAL, CHIP 7.5K 0.5% 1/16W
R355	1-211-990-11	s	METAL, CHIP 75 0.5% 1/16W
R357	1-218-838-11	s	METAL, CHIP 430 0.5% 1/16W
R358	1-211-969-11	s	METAL, CHIP 10 0.5% 1/16W
R360	1-218-752-11	s	METAL, CHIP 330K 0.5% 1/16W
R361	1-218-752-11	s	METAL, CHIP 330K 0.5% 1/16W
R363	1-211-977-11	s	METAL, CHIP 22 0.5% 1/16W
R364	1-218-874-11	s	METAL, CHIP 13K 0.5% 1/16W
R365	1-218-692-11	s	METAL, CHIP 1K 0.5% 1/16W
R366	1-211-969-11	s	METAL, CHIP 10 0.5% 1/16W
R367	1-218-668-11	s	METAL, CHIP 100 0.5% 1/16W
R369	1-216-603-11	s	METAL, CHIP 10 0.5% 1/10W
R400	1-211-977-11	s	METAL, CHIP 22 0.5% 1/16W
R401	1-211-969-11	s	METAL, CHIP 10 0.5% 1/16W
R402	1-211-969-11	s	METAL, CHIP 10 0.5% 1/16W
R403	1-218-851-11	s	METAL, CHIP 1.5K 0.5% 1/16W
R404	1-218-716-11	s	METAL, CHIP 10K 0.5% 1/16W
R406	1-218-851-11	s	METAL, CHIP 1.5K 0.5% 1/16W
R409	1-218-716-11	s	METAL, CHIP 10K 0.5% 1/16W
R410	1-218-684-11	s	METAL, CHIP 470 0.5% 1/16W
R411	1-218-684-11	s	METAL, CHIP 470 0.5% 1/16W
R412	1-218-836-11	s	METAL, CHIP 360 0.5% 1/16W
R413	1-218-698-11	s	METAL, CHIP 1.8K 0.5% 1/16W

(EQ-54 BOARD)

Ref. No. or Q'ty	Part No.	SP	Description
R414	1-218-698-11	s	METAL, CHIP 1.8K 0.5% 1/16W
R415	1-218-698-11	s	METAL, CHIP 1.8K 0.5% 1/16W
R416	1-211-969-11	s	METAL, CHIP 10 0.5% 1/16W
R417	1-218-844-11	s	METAL, CHIP 750 0.5% 1/16W
R418	1-218-668-11	s	METAL, CHIP 100 0.5% 1/16W
R419	1-218-836-11	s	METAL, CHIP 360 0.5% 1/16W
R421	1-218-668-11	s	METAL, CHIP 100 0.5% 1/16W
R422	1-218-668-11	s	METAL, CHIP 100 0.5% 1/16W
R423	1-218-856-11	s	METAL, CHIP 2.4K 0.5% 1/16W
R425	1-218-710-11	s	METAL, CHIP 5.6K 0.5% 1/16W
R426	1-218-897-11	s	METAL, CHIP 120K 0.5% 1/16W
R428	1-218-668-11	s	METAL, CHIP 100 0.5% 1/16W
R429	1-218-864-11	s	METAL, CHIP 5.1K 0.5% 1/16W
R430	1-218-881-11	s	METAL, CHIP 27K 0.5% 1/16W
R431	1-218-851-11	s	METAL, CHIP 1.5K 0.5% 1/16W
R432	1-218-851-11	s	METAL, CHIP 1.5K 0.5% 1/16W
R433	1-218-707-11	s	METAL, CHIP 4.3K 0.5% 1/16W
R434	1-218-702-11	s	METAL, CHIP 2.7K 0.5% 1/16W
R435	1-218-716-11	s	METAL, CHIP 10K 0.5% 1/16W
R436	1-218-698-11	s	METAL, CHIP 1.8K 0.5% 1/16W
R437	1-218-698-11	s	METAL, CHIP 1.8K 0.5% 1/16W
R438	1-211-969-11	s	METAL, CHIP 10 0.5% 1/16W
R439	1-218-692-11	s	METAL, CHIP 1K 0.5% 1/16W
R440	1-218-851-11	s	METAL, CHIP 1.5K 0.5% 1/16W
R441	1-218-660-11	s	METAL, CHIP 47 0.5% 1/16W
R442	1-218-660-11	s	METAL, CHIP 47 0.5% 1/16W
R443	1-218-752-11	s	METAL, CHIP 330K 0.5% 1/16W
R444	1-218-752-11	s	METAL, CHIP 330K 0.5% 1/16W
R445	1-218-694-11	s	METAL, CHIP 1.2K 0.5% 1/16W
R446	1-218-716-11	s	METAL, CHIP 10K 0.5% 1/16W
R447	1-218-692-11	s	METAL, CHIP 1K 0.5% 1/16W
R448	1-218-716-11	s	METAL, CHIP 10K 0.5% 1/16W
R449	1-218-840-11	s	METAL, CHIP 510 0.5% 1/16W
R450	1-218-883-11	s	METAL, CHIP 33K 0.5% 1/16W
R451	1-211-969-11	s	METAL, CHIP 10 0.5% 1/16W
R452	1-218-836-11	s	METAL, CHIP 360 0.5% 1/16W
R453	1-218-868-11	s	METAL, CHIP 7.5K 0.5% 1/16W
R455	1-211-990-11	s	METAL, CHIP 75 0.5% 1/16W
R457	1-218-838-11	s	METAL, CHIP 430 0.5% 1/16W
R458	1-211-969-11	s	METAL, CHIP 10 0.5% 1/16W
R460	1-218-752-11	s	METAL, CHIP 330K 0.5% 1/16W
R461	1-218-752-11	s	METAL, CHIP 330K 0.5% 1/16W
R463	1-211-977-11	s	METAL, CHIP 22 0.5% 1/16W
R464	1-218-874-11	s	METAL, CHIP 13K 0.5% 1/16W
R465	1-218-692-11	s	METAL, CHIP 1K 0.5% 1/16W
R466	1-211-969-11	s	METAL, CHIP 10 0.5% 1/16W
R467	1-218-668-11	s	METAL, CHIP 100 0.5% 1/16W
R469	1-216-603-11	s	METAL, CHIP 10 0.5% 1/10W
R500	1-218-740-11	s	METAL, CHIP 100K 0.5% 1/16W
R501	1-218-740-11	s	METAL, CHIP 100K 0.5% 1/16W
R502	1-218-692-11	s	METAL, CHIP 1K 0.5% 1/16W
R503	1-218-692-11	s	METAL, CHIP 1K 0.5% 1/16W
R504	1-218-716-11	s	METAL, CHIP 10K 0.5% 1/16W
R505	1-218-716-11	s	METAL, CHIP 10K 0.5% 1/16W
R506	1-218-716-11	s	METAL, CHIP 10K 0.5% 1/16W
R507	1-218-740-11	s	METAL, CHIP 100K 0.5% 1/16W
R508	1-218-692-11	s	METAL, CHIP 1K 0.5% 1/16W
R509	1-218-692-11	s	METAL, CHIP 1K 0.5% 1/16W
R510	1-218-692-11	s	METAL, CHIP 1K 0.5% 1/16W

(EQ-54 BOARD)

Ref. No. or Q'ty	Part No.	SP	Description
R511	1-218-716-11	s	METAL, CHIP 10K 0.5% 1/16W
R512	1-218-716-11	s	METAL, CHIP 10K 0.5% 1/16W
R513	1-218-716-11	s	METAL, CHIP 10K 0.5% 1/16W
R520	1-218-732-11	s	METAL, CHIP 47K 0.5% 1/16W
R521	1-218-732-11	s	METAL, CHIP 47K 0.5% 1/16W
R530	1-218-837-11	s	METAL, CHIP 390 0.5% 1/16W
R531	1-218-870-11	s	METAL, CHIP 9.1K 0.5% 1/16W
R532	1-218-706-11	s	METAL, CHIP 3.9K 0.5% 1/16W
R533	1-218-870-11	s	METAL, CHIP 9.1K 0.5% 1/16W
R534	1-218-870-11	s	METAL, CHIP 9.1K 0.5% 1/16W
R535	1-218-706-11	s	METAL, CHIP 3.9K 0.5% 1/16W
R536	1-218-870-11	s	METAL, CHIP 9.1K 0.5% 1/16W
R537-542	1-218-695-11	s	METAL, CHIP 1.3K 0.5% 1/16W
R543	1-218-870-11	s	METAL, CHIP 9.1K 0.5% 1/16W
R544	1-218-706-11	s	METAL, CHIP 3.9K 0.5% 1/16W
R545	1-218-870-11	s	METAL, CHIP 9.1K 0.5% 1/16W
R546	1-218-870-11	s	METAL, CHIP 9.1K 0.5% 1/16W
R547	1-218-706-11	s	METAL, CHIP 3.9K 0.5% 1/16W
R548	1-218-870-11	s	METAL, CHIP 9.1K 0.5% 1/16W
R549-554	1-218-695-11	s	METAL, CHIP 1.3K 0.5% 1/16W
R600	1-218-740-11	s	METAL, CHIP 100K 0.5% 1/16W
R601	1-218-740-11	s	METAL, CHIP 100K 0.5% 1/16W
R602	1-218-692-11	s	METAL, CHIP 1K 0.5% 1/16W
R603	1-218-692-11	s	METAL, CHIP 1K 0.5% 1/16W
R604	1-218-716-11	s	METAL, CHIP 10K 0.5% 1/16W
R605	1-218-716-11	s	METAL, CHIP 10K 0.5% 1/16W
R606	1-218-716-11	s	METAL, CHIP 10K 0.5% 1/16W
R607	1-218-740-11	s	METAL, CHIP 100K 0.5% 1/16W
R608	1-218-692-11	s	METAL, CHIP 1K 0.5% 1/16W
R609	1-218-692-11	s	METAL, CHIP 1K 0.5% 1/16W
R610	1-218-692-11	s	METAL, CHIP 1K 0.5% 1/16W
R611	1-218-716-11	s	METAL, CHIP 10K 0.5% 1/16W
R612	1-218-716-11	s	METAL, CHIP 10K 0.5% 1/16W
R613	1-218-716-11	s	METAL, CHIP 10K 0.5% 1/16W
R620	1-218-732-11	s	METAL, CHIP 47K 0.5% 1/16W
R621	1-218-732-11	s	METAL, CHIP 47K 0.5% 1/16W
R630	1-218-837-11	s	METAL, CHIP 390 0.5% 1/16W
R631	1-218-870-11	s	METAL, CHIP 9.1K 0.5% 1/16W
R632	1-218-706-11	s	METAL, CHIP 3.9K 0.5% 1/16W
R633	1-218-870-11	s	METAL, CHIP 9.1K 0.5% 1/16W
R634	1-218-870-11	s	METAL, CHIP 9.1K 0.5% 1/16W
R635	1-218-706-11	s	METAL, CHIP 3.9K 0.5% 1/16W
R636	1-218-870-11	s	METAL, CHIP 9.1K 0.5% 1/16W
R637-642	1-218-695-11	s	METAL, CHIP 1.3K 0.5% 1/16W
R643	1-218-870-11	s	METAL, CHIP 9.1K 0.5% 1/16W
R644	1-218-706-11	s	METAL, CHIP 3.9K 0.5% 1/16W
R645	1-218-870-11	s	METAL, CHIP 9.1K 0.5% 1/16W
R646	1-218-870-11	s	METAL, CHIP 9.1K 0.5% 1/16W
R647	1-218-706-11	s	METAL, CHIP 3.9K 0.5% 1/16W
R648	1-218-870-11	s	METAL, CHIP 9.1K 0.5% 1/16W
R649-654	1-218-695-11	s	METAL, CHIP 1.3K 0.5% 1/16W
R700	1-218-668-11	s	METAL, CHIP 100 0.5% 1/16W
R701	1-218-668-11	s	METAL, CHIP 100 0.5% 1/16W
R702-707	1-218-740-11	s	METAL, CHIP 100K 0.5% 1/16W
R708	1-218-692-11	s	METAL, CHIP 1K 0.5% 1/16W
R709	1-218-692-11	s	METAL, CHIP 1K 0.5% 1/16W
R710	1-218-716-11	s	METAL, CHIP 10K 0.5% 1/16W
R711	1-218-740-11	s	METAL, CHIP 100K 0.5% 1/16W
R712	1-218-740-11	s	METAL, CHIP 100K 0.5% 1/16W

(EQ-54 BOARD)

Ref. No. or Q'ty	Part No.	SP	Description
R713	1-218-740-11	s	METAL, CHIP 100K 0.5% 1/16W
R800	1-218-668-11	s	METAL, CHIP 100 0.5% 1/16W
R801	1-216-864-11	s	METAL, CHIP 0
R802	1-218-708-11	s	METAL, CHIP 4.7K 0.5% 1/16W
R803	1-218-708-11	s	METAL, CHIP 4.7K 0.5% 1/16W
R804	1-218-708-11	s	METAL, CHIP 4.7K 0.5% 1/16W
R805	1-218-748-11	s	METAL, CHIP 220K 0.5% 1/16W
R806	1-218-708-11	s	METAL, CHIP 4.7K 0.5% 1/16W
R807	1-218-748-11	s	METAL, CHIP 220K 0.5% 1/16W
R808	1-218-724-11	s	METAL, CHIP 22K 0.5% 1/16W
R809	1-218-724-11	s	METAL, CHIP 22K 0.5% 1/16W
R810	1-218-883-11	s	METAL, CHIP 33K 0.5% 1/16W
R811	1-218-740-11	s	METAL, CHIP 100K 0.5% 1/16W
R812	1-218-724-11	s	METAL, CHIP 22K 0.5% 1/16W
R813	1-218-883-11	s	METAL, CHIP 33K 0.5% 1/16W
R814	1-218-748-11	s	METAL, CHIP 220K 0.5% 1/16W
R815	1-218-716-11	s	METAL, CHIP 10K 0.5% 1/16W
R816	1-218-722-11	s	METAL, CHIP 18K 0.5% 1/16W
R817	1-218-732-11	s	METAL, CHIP 47K 0.5% 1/16W
R818	1-218-708-11	s	METAL, CHIP 4.7K 0.5% 1/16W
R819	1-218-881-11	s	METAL, CHIP 27K 0.5% 1/16W
R820	1-218-748-11	s	METAL, CHIP 220K 0.5% 1/16W
R821	1-218-724-11	s	METAL, CHIP 22K 0.5% 1/16W
R822	1-218-698-11	s	METAL, CHIP 1.8K 0.5% 1/16W
R823	1-216-117-00	s	METAL, CHIP 680K 5% 1/10W
R824	1-218-732-11	s	METAL, CHIP 47K 0.5% 1/16W
R825	1-218-732-11	s	METAL, CHIP 47K 0.5% 1/16W
R826	1-218-740-11	s	METAL, CHIP 100K 0.5% 1/16W
R827	1-218-708-11	s	METAL, CHIP 4.7K 0.5% 1/16W
R828	1-218-740-11	s	METAL, CHIP 100K 0.5% 1/16W
R829	1-218-700-11	s	METAL, CHIP 2.2K 0.5% 1/16W
R830	1-218-700-11	s	METAL, CHIP 2.2K 0.5% 1/16W
R831	1-216-298-00	s	METAL 2.2 5% 1/10W
R832	1-216-298-00	s	METAL 2.2 5% 1/10W
R833	1-218-700-11	s	METAL, CHIP 2.2K 0.5% 1/16W
R834	1-218-700-11	s	METAL, CHIP 2.2K 0.5% 1/16W
R835	1-216-603-11	s	METAL, CHIP 10 0.5% 1/10W
R836	1-218-668-11	s	METAL, CHIP 100 0.5% 1/16W
R837	1-218-714-11	s	METAL, CHIP 8.2K 0.5% 1/16W
R838	1-218-716-11	s	METAL, CHIP 10K 0.5% 1/16W
R839	1-218-716-11	s	METAL, CHIP 10K 0.5% 1/16W
R840	1-218-750-11	s	METAL, CHIP 270K 0.5% 1/16W
R841	1-218-676-11	s	METAL, CHIP 220 0.5% 1/16W
R842	1-218-702-11	s	METAL, CHIP 2.7K 0.5% 1/16W
R843	1-218-716-11	s	METAL, CHIP 10K 0.5% 1/16W
R844	1-218-692-11	s	METAL, CHIP 1K 0.5% 1/16W
R845	1-218-833-11	s	METAL, CHIP 270 0.5% 1/16W
R846	1-218-708-11	s	METAL, CHIP 4.7K 0.5% 1/16W
R847	1-218-740-11	s	METAL, CHIP 100K 0.5% 1/16W
R848	1-218-732-11	s	METAL, CHIP 47K 0.5% 1/16W
R849	1-218-732-11	s	METAL, CHIP 47K 0.5% 1/16W
R850	1-218-708-11	s	METAL, CHIP 4.7K 0.5% 1/16W
R852	1-218-708-11	s	METAL, CHIP 4.7K 0.5% 1/16W
R853	1-216-864-11	s	METAL, CHIP 0
RB100-104	1-239-412-11	s	NETWORK RESISTOR (CHIP) 10Ω
RB200-204	1-239-412-11	s	NETWORK RESISTOR (CHIP) 10Ω

(EQ-54 BOARD)

Ref. No. or Q'ty	Part No.	SP	Description
RB300-304	1-239-412-11	s	NETWORK RESISTOR (CHIP) 100
RB400-404	1-239-412-11	s	NETWORK RESISTOR (CHIP) 100
RB530	1-239-412-11	s	NETWORK RESISTOR (CHIP) 100
RV100	1-237-033-11	s	RES, ADJ METAL 1K
RV101	1-237-032-11	s	RES, ADJ METAL 500
RV103	1-237-039-11	s	RES, ADJ METAL 100K
RV104	1-237-032-11	s	RES, ADJ METAL 500
RV200	1-237-033-11	s	RES, ADJ METAL 1K
RV201	1-237-032-11	s	RES, ADJ METAL 500
RV203	1-237-039-11	s	RES, ADJ METAL 100K
RV204	1-237-032-11	s	RES, ADJ METAL 500
RV300	1-237-033-11	s	RES, ADJ METAL 1K
RV301	1-237-032-11	s	RES, ADJ METAL 500
RV303	1-237-039-11	s	RES, ADJ METAL 100K
RV304	1-237-032-11	s	RES, ADJ METAL 500
RV400	1-237-033-11	s	RES, ADJ METAL 1K
RV401	1-237-032-11	s	RES, ADJ METAL 500
RV403	1-237-039-11	s	RES, ADJ METAL 100K
RV404	1-237-032-11	s	RES, ADJ METAL 500
RV800	1-237-035-11	s	RES, ADJ METAL 5K
RV801	1-237-038-11	s	RES, ADJ METAL 50K
RV802	1-237-035-11	s	RES, ADJ METAL 5K
RV803	1-237-035-11	s	RES, ADJ METAL 5K
S700	1-570-598-11	s	SWITCH, DIP 4-CKT

FU-63 BOARD

Ref. No. or Q'ty	Part No.	SP	Description
1pc	A-8276-938-A	o	MOUNTED CIRCUIT BOARD, FU-63
4pcs	1-533-189-11	s	HOLDER, FUSE
1pc	3-169-383-01	o	BRACKET, PANEL
1pc	7-621-771-06	s	SCREW +B 2X5
2pcs	7-682-902-11	s	SCREW +PWH 2.6X5
C1	1-164-182-11	s	CERAMIC, CHIP 3300PF 10% 100V
C2	1-127-519-11	s	ALUMN SOLID 100uF 20% 20V
C3	1-164-489-11	s	CERAMIC, CHIP 0.22uF 10% 16V
C4	1-164-489-11	s	CERAMIC, CHIP 0.22uF 10% 16V
C5	1-163-037-11	s	CERAMIC, CHIP 0.022uF 10% 25V
C6	1-163-038-00	s	CERAMIC 0.1uF 25V
CN441	1-535-894-11	o	TAB, FASTON
CN442	1-535-894-11	o	TAB, FASTON
CN443	1-506-469-11	s	CONNECTOR 4P, MALE
CN444	1-506-469-11	s	CONNECTOR 4P, MALE
CN445	1-566-758-11	o	CONNECTOR 3P, MALE
CN446	1-566-759-11	o	CONNECTOR 4P, MALE
D1	8-719-800-76	s	DIODE 1SS226
D2	8-719-801-78	s	DIODE 1SS184
D3	8-719-801-78	s	DIODE 1SS184
D4	8-719-158-15	s	DIODE RD5.6SB
F1 ⚠	1-532-749-11	s	FUSE, 8A 125V
F2 ⚠	1-532-749-11	s	FUSE, 8A 125V
IC1	8-759-927-99	s	IC MB3761PF
Q1	8-729-140-63	s	TRANSISTOR 2SA1611-M5M6
Q2	8-729-117-31	s	TRANSISTOR 2SC4177-L5
Q3	8-729-117-31	s	TRANSISTOR 2SC4177-L5
Q4	8-729-117-31	s	TRANSISTOR 2SC4177-L5
Q5	8-729-033-42	s	TRANSISTOR 2SK2206
Q6	8-729-033-42	s	TRANSISTOR 2SK2206
Q7	8-729-033-42	s	TRANSISTOR 2SK2206
Q8	8-729-140-63	s	TRANSISTOR 2SA1611-M5M6
R1	1-216-671-11	s	METAL, CHIP 6.8K 0.5% 1/10W
R2	1-208-823-11	s	METAL, CHIP 51K 0.5% 1/10W
R3	1-218-760-11	s	METAL, CHIP 220K 0.5% 1/10W
R4	1-216-687-11	s	METAL, CHIP 33K 0.5% 1/10W
R5	1-216-699-11	s	METAL, CHIP 100K 0.5% 1/10W
R6	1-216-667-11	s	METAL, CHIP 4.7K 0.5% 1/10W
R7	1-208-822-11	s	METAL, CHIP 47K 0.5% 1/10W
R8	1-216-651-11	s	METAL, CHIP 1K 0.5% 1/10W
R9	1-216-699-11	s	METAL, CHIP 100K 0.5% 1/10W
R10	1-216-676-11	s	METAL, CHIP 11K 0.5% 1/10W
R11	1-208-774-11	s	METAL, CHIP 470 0.5% 1/10W
R12	1-218-770-11	s	METAL, CHIP 560K 0.5% 1/10W
R13	1-216-695-11	s	METAL, CHIP 68K 0.5% 1/10W
R14	1-216-699-11	s	METAL, CHIP 100K 0.5% 1/10W
R15	1-216-699-11	s	METAL, CHIP 100K 0.5% 1/10W
R16	1-216-699-11	s	METAL, CHIP 100K 0.5% 1/10W
R17	1-216-699-11	s	METAL, CHIP 100K 0.5% 1/10W
R18	1-216-687-11	s	METAL, CHIP 33K 0.5% 1/10W
R19	1-216-695-11	s	METAL, CHIP 68K 0.5% 1/10W
R20	1-218-772-11	s	METAL 680K 0.5% 1/10W
R21	1-216-695-11	s	METAL, CHIP 68K 0.5% 1/10W
R22	1-216-695-11	s	METAL, CHIP 68K 0.5% 1/10W
R23	1-208-814-11	s	METAL, CHIP 22K 0.5% 1/10W
R24	1-216-671-11	s	METAL, CHIP 6.8K 0.5% 1/10W

(FU-63 BOARD)

Ref. No. or Q'ty	Part No.	SP	Description
R25	1-216-671-11	s	METAL, CHIP 6.8K 0.5% 1/10W
R26	1-216-673-11	s	METAL, CHIP 8.2K 0.5% 1/10W
R27	1-208-854-11	s	METAL, CHIP 1M 0.5% 1/10W
R28	1-208-814-11	s	METAL, CHIP 22K 0.5% 1/10W
R29	1-216-671-11	s	METAL, CHIP 6.8K 0.5% 1/10W
R30	1-216-699-11	s	METAL, CHIP 100K 0.5% 1/10W
R31	1-208-822-11	s	METAL, CHIP 47K 0.5% 1/10W

KY-315/315P BOARD

Ref. No. or Q'ty	Part No.	SP	Description
1pc	A-8276-948-A	o	MOUNTED CIRCUIT BOARD, KY-315 [for NTSC]
	A-8276-950-A	o	MOUNTED CIRCUIT BOARD, KY-315P [for PAL]
1pc	3-169-546-02	o	HOLDER, LCD
C1	1-164-232-11	s	CERAMIC, CHIP 0.01uF 10% 100V
C2-9	1-163-125-00	s	CERAMIC, CHIP 220PF 5% 50V
CN461	1-566-766-11	o	CONNECTOR 11P, MALE
CN462	1-566-765-11	o	CONNECTOR 10P, MALE
CN463	1-566-765-11	o	CONNECTOR 10P, MALE
D1-21	8-719-941-09	s	DIODE DAP202U
D22	8-719-109-51	s	DIODE RD2.0ES-B2
D23	8-719-941-23	s	DIODE DA204U
D24	1-809-346-11	s	LED, BACK LIGHT
D25	1-809-346-11	s	LED, BACK LIGHT
D26	8-719-915-45	s	LED SLP162B, RED
D27	8-719-915-45	s	LED SLP162B, RED
D28	1-809-346-11	s	LED, BACK LIGHT
D29	1-809-346-11	s	LED, BACK LIGHT
D30	8-719-955-05	s	DIODE BR5505S
D31	1-809-346-11	s	LED, BACK LIGHT
D32	1-809-346-11	s	LED, BACK LIGHT
D33	8-719-902-27	s	LED EBR3402S, RED
D34	8-719-915-45	s	LED SLP162B, RED
D35	8-719-915-45	s	LED SLP162B, RED
D36	8-719-902-27	s	LED EBR3402S, RED
D37	8-719-902-27	s	LED EBR3402S, RED
D38	8-719-915-45	s	LED SLP162B, RED
IC1	8-759-171-74	s	IC MSM6660-01GS-V1K
IC2	8-759-932-10	s	IC MB88306PF
IC3	8-759-932-10	s	IC MB88306PF
IC4	8-759-926-25	s	IC SN74HC165ANS
L1	1-408-789-21	s	INDUCTOR, CHIP 100uH
ND1	1-809-345-11	s	UNIT, LCD
Q2	8-729-023-22	s	TRANSISTOR 2SD2114K
Q3	8-729-023-22	s	TRANSISTOR 2SD2114K
R1	1-216-097-00	s	METAL, CHIP 100K 5% 1/10W
R2	1-216-065-00	s	METAL, CHIP 4.7K 5% 1/10W
R3	1-216-065-00	s	METAL, CHIP 4.7K 5% 1/10W
R4	1-216-059-00	s	METAL, CHIP 2.7K 5% 1/10W
R5	1-126-049-11	s	METAL, CHIP 1K 5% 1/10W
R6	1-216-033-00	s	METAL, CHIP 220 5% 1/10W
R7	1-216-033-00	s	METAL, CHIP 220 5% 1/10W
R8	1-216-013-00	s	METAL, CHIP 33 5% 1/10W
R9	1-216-033-00	s	METAL, CHIP 220 5% 1/10W
R10	1-216-013-00	s	METAL, CHIP 33 5% 1/10W
R11	1-216-033-00	s	METAL, CHIP 220 5% 1/10W
R12	1-216-013-00	s	METAL, CHIP 33 5% 1/10W
R13	1-216-033-00	s	METAL, CHIP 220 5% 1/10W
R14	1-216-033-00	s	METAL, CHIP 220 5% 1/10W
R15	1-216-033-00	s	METAL, CHIP 220 5% 1/10W
R16	1-216-033-00	s	METAL, CHIP 220 5% 1/10W
R17	1-216-059-00	s	METAL, CHIP 2.7K 5% 1/10W
R18	1-216-033-00	s	METAL, CHIP 220 5% 1/10W
R20	1-216-033-00	s	METAL, CHIP 220 5% 1/10W

(KY-315/315P BOARD)

Ref. No. or Q'ty	Part No.	SP	Description
R21	1-216-033-00	s	METAL, CHIP 220 5% 1/10W
R22	1-216-033-00	s	METAL, CHIP 220 5% 1/10W
R23-30	1-216-073-00	s	METAL, CHIP 10K 5% 1/10W
R31-35	1-216-036-00	s	METAL, CHIP 300 5% 1/10W
R36	1-216-013-00	s	METAL, CHIP 33 5% 1/10W
R37	1-216-013-00	s	METAL, CHIP 33 5% 1/10W
R38	1-216-013-00	s	METAL, CHIP 33 5% 1/10W
R40-47	1-126-049-11	s	METAL, CHIP 1K 5% 1/10W
S1-17	1-572-725-11	s	SWITCH, PUSH
S18	1-553-977-00	s	SWITCH, SLIDE
S19	1-553-977-00	s	SWITCH, SLIDE
S20	1-570-724-11	s	SWITCH, SLIDE
S21	1-570-724-11	s	SWITCH, SLIDE
S22	1-553-977-00	s	SWITCH, SLIDE
S23	1-570-337-11	s	SWITCH, DIGITAL
S24	1-570-337-11	s	SWITCH, DIGITAL
S25	1-553-977-00	s	SWITCH, SLIDE
S26	1-553-977-00	s	SWITCH, SLIDE [for NTSC]
S27	1-570-854-11	s	SWITCH, SLIDE
S28	1-554-377-21	s	SWITCH, SLIDE
S29	1-570-851-11	s	SWITCH, SLIDE

MB-601 BOARD

Ref. No. or Q'ty	Part No.	SP	Description
1pc	A-8276-909-A	o	MOUNTED CIRCUIT BOARD, MB-601
C903	1-110-985-11	s	ELECT 0.0012F 20% 6.3V
C904	1-110-988-11	s	ELECT 0.0022F 20% 6.3V
CN901	1-774-263-11	s	CONNECTOR, BOARD TO BOARD 20P
CN902-907	1-774-265-11	s	CONNECTOR, BOARD TO BOARD 30P
CN908	1-774-263-11	s	CONNECTOR, BOARD TO BOARD 20P
CN909	1-774-265-11	s	CONNECTOR, BOARD TO BOARD 30P
CN910	1-774-265-11	s	CONNECTOR, BOARD TO BOARD 30P
CN911	1-774-265-11	s	CONNECTOR, BOARD TO BOARD 30P
CN912	1-566-568-11	o	CONNECTOR 40P, FEMALE
CN913	1-580-538-11	o	CONNECTOR, LY 18P, MALE
CN914	1-566-758-11	o	CONNECTOR 3P, MALE
CN915	1-566-757-11	s	CONNECTOR, PC BOARD 2P, MALE
CN921	1-565-884-11	o	CONNECTOR 12P, MALE
CN923	1-566-759-11	o	CONNECTOR 4P, MALE
CN930	1-566-758-11	o	CONNECTOR 3P, MALE
CN931	1-535-894-11	o	TAB, FASTON
CN932	1-535-894-11	o	TAB, FASTON
CN941	1-566-763-11	o	CONNECTOR 8P, MAEL
CN942	1-506-468-11	s	CONNECTOR 3P, MALE
CN943	1-506-467-11	s	CONNECTOR 2P, MALE
CN944	1-506-467-11	s	CONNECTOR 2P, MALE
CN946	1-506-467-11	s	CONNECTOR 2P, MALE
CN947	1-564-002-41	s	CONNECTOR 3P, MALE
CN949	1-564-005-11	o	CONNECTOR 6P, MALE
CN951	1-506-467-11	s	CONNECTOR 2P, MALE
CN952	1-506-468-11	s	CONNECTOR 3P, MALE
CN953	1-564-002-11	s	CONNECTOR 3P, MALE
CN954	1-506-469-11	s	CONNECTOR 4P, MALE
CN955	1-564-002-41	s	CONNECTOR 3P, MALE
CN956	1-506-468-11	s	CONNECTOR 3P, MALE
CN957	1-506-472-11	o	CONNECTOR 7P, MALE
CN958	1-506-467-11	s	CONNECTOR 2P, MALE
CN960	1-564-001-11	o	CONNECTOR 2P, MALE
E1	3-657-235-00	o	POINT, TEST
E2	3-657-235-00	o	POINT, TEST
TP1-14	3-657-235-00	o	POINT, TEST

PSW-31A BOARD

Ref. No. or Q'ty	Part No.	SP	Description
1pc	A-8269-442-A	s	POWER ASSY [for J]
	A-8269-463-A	s	POWER ASSY [for US,SY]
3pcs	9-911-840-99	s	CUSHION, CRT
C1	1-127-520-11	s	ELECT 68uF 20% 20V
C2-9	1-163-037-11	s	CERAMIC, CHIP 0.022uF 10% 25V
C10	1-163-038-00	s	CERAMIC 0.1uF 25V
C11	1-163-038-00	s	CERAMIC 0.1uF 25V
C12	1-163-038-00	s	CERAMIC 0.1uF 25V
C13	1-127-513-00	s	ALUMN SOLID 15uF 20% 25V
C14	1-127-513-00	s	ALUMN SOLID 15uF 20% 25V
C15	1-163-038-00	s	CERAMIC 0.1uF 25V
C16	1-163-038-00	s	CERAMIC 0.1uF 25V
C17	1-163-038-00	s	CERAMIC 0.1uF 25V
C18	1-127-519-11	s	ALUMN SOLID 100uF 20% 20V
C19	1-127-519-11	s	ALUMN SOLID 100uF 20% 20V
C20	1-127-531-11	s	ELECT 33uF 20% 20V
C21	1-127-519-11	s	ALUMN SOLID 100uF 20% 20V
C22	1-127-515-11	s	ALUMN SOLID 47uF 20% 10V
C23	1-127-532-11	s	ELECT 47uF 20% 20V
C24	1-127-515-11	s	ALUMN SOLID 47uF 20% 10V
C25	1-127-515-11	s	ALUMN SOLID 47uF 20% 10V
C26	1-127-515-11	s	ALUMN SOLID 47uF 20% 10V
C27	1-127-518-11	s	ALUMN SOLID 100uF 20% 16V
C28-33	1-111-011-11	s	ELECT 470uF 20% 10V
C34-39	1-163-038-00	s	CERAMIC 0.1uF 25V
C40	1-111-011-11	s	ELECT 470uF 20% 10V
C41	1-163-038-00	s	CERAMIC 0.1uF 25V
C42	1-163-038-00	s	CERAMIC 0.1uF 25V
CN601	1-506-469-11	s	CONNECTOR 4P, MALE
CN602	1-535-894-11	o	TAB, FASTON
CN603	1-566-566-11	o	CONNECTOR 40P, MALE
D1	8-719-981-38	s	DIODE ERC62M-004
D2-9	8-719-975-43	s	DIODE RB420D
D10	8-719-210-39	s	DIODE EC10QS-04
D11	8-719-210-39	s	DIODE EC10QS-04
F1 ⚠	1-532-679-21	s	LINK
FB1-7	1-543-821-11	s	BEAD, AMORPHOUS
L1	1-406-929-11	s	COIL, CHOKE
L2	1-424-517-11	s	COIL, CHOKE 200UH
L3	1-424-517-11	s	COIL, CHOKE 200UH
L4	1-411-521-11	s	COIL, CHOKE 52uH
L5	1-424-517-11	s	COIL, CHOKE 200UH
L6	1-411-521-11	s	COIL, CHOKE 52uH
L7-13	1-421-459-21	s	COIL, CHOKE
Q1	8-729-029-14	s	TRANSISTOR DTC144EUA-T106
Q2	8-729-032-72	s	TRANSISTOR 2SJ332L
Q3	8-729-143-63	s	TRANSISTOR 2SJ132
Q4	8-729-031-13	s	TRANSISTOR SI-9430DY-T1
Q5	8-729-143-63	s	TRANSISTOR 2SJ132
Q6	8-729-031-13	s	TRANSISTOR SI-9430DY-T1
Q7	8-729-143-63	s	TRANSISTOR 2SJ132
Q8	8-729-031-13	s	TRANSISTOR SI-9430DY-T1
Q9	8-729-032-73	s	TRANSISTOR 2SK2084L
Q10	8-729-032-73	s	TRANSISTOR 2SK2084L
Q11	8-729-032-73	s	TRANSISTOR 2SK2084L

(PSW-31A BOARD)

Ref. No. or Q'ty	Part No.	SP	Description
Q12	8-729-032-73	s	TRANSISTOR 2SK2084L
R1	1-216-089-00	s	METAL, CHIP 47k 5% 1/10W
R2	1-219-724-11	s	METAL 1 1% 1/4W
R3	1-219-724-11	s	METAL 1 1% 1/4W
R4	1-219-723-11	s	METAL 0.15 1% 1/4W
R5	1-219-724-11	s	METAL 1 1% 1/4W
R6	1-219-724-11	s	METAL 1 1% 1/4W
R7	1-219-723-11	s	METAL 0.15 1% 1/4W
R8	1-219-723-11	s	METAL 0.15 1% 1/4W
R9	1-219-724-11	s	METAL 1 1% 1/4W
R10	1-219-724-11	s	METAL 1 1% 1/4W
R11	1-219-723-11	s	METAL 0.15 1% 1/4W
R12	1-219-722-11	s	METAL 0.1 1% 1/4W
R13	1-219-723-11	s	METAL 0.15 1% 1/4W
R14	1-216-077-00	s	METAL, CHIP 15K 5% 1/10W
R15	1-216-073-00	s	METAL, CHIP 10K 5% 1/10W
R16	1-216-081-00	s	METAL, CHIP 22K 5% 1/10W
R17	1-216-073-00	s	METAL, CHIP 10K 5% 1/10W
R18	1-216-073-00	s	METAL, CHIP 10K 5% 1/10W
R19	1-216-017-00	s	METAL, CHIP 47 5% 1/10W
R20	1-216-025-00	s	METAL, CHIP 100 5% 1/10W
R21	1-216-017-00	s	METAL, CHIP 47 5% 1/10W
R22	1-216-025-00	s	METAL, CHIP 100 5% 1/10W
R23	1-216-017-00	s	METAL, CHIP 47 5% 1/10W
R24	1-216-025-00	s	METAL, CHIP 100 5% 1/10W
R25	1-216-017-00	s	METAL, CHIP 47 5% 1/10W
R26	1-216-025-00	s	METAL, CHIP 100 5% 1/10W
R27	1-216-073-00	s	METAL, CHIP 10K 5% 1/10W
R28	1-216-073-00	s	METAL, CHIP 10K 5% 1/10W
R29	1-216-073-00	s	METAL, CHIP 10K 5% 1/10W
R30	1-216-073-00	s	METAL, CHIP 10K 5% 1/10W
R31	1-216-001-00	s	METAL, CHIP 10 5% 1/10W
R32	1-216-001-00	s	METAL, CHIP 10 5% 1/10W
R33	1-216-073-00	s	METAL, CHIP 10K 5% 1/10W
R34	1-216-073-00	s	METAL, CHIP 10K 5% 1/10W
R35	1-216-073-00	s	METAL, CHIP 10K 5% 1/10W
R36	1-216-073-00	s	METAL, CHIP 10K 5% 1/10W
R37	1-216-689-11	s	METAL, CHIP 39K 0.5% 1/10W
R38	1-216-093-00	s	METAL, CHIP 68K 5% 1/10W
R39	1-216-689-11	s	METAL, CHIP 39K 0.5% 1/10W

PSW-31B BOARD

Ref. No. or Q'ty	Part No.	SP	Description
1pc	A-8269-442-A	s	POWER ASSY [for J]
	A-8269-463-A	s	POWER ASSY [for US,SY]
C101	1-111-057-11	s	ELECT 120uF 20% 25V
C102	1-164-346-11	s	CERAMIC 1uF 16V
C103	1-162-970-11	s	CERAMIC, CHIP 0.01uF 10% 25V
C104	1-111-107-11	s	ELECT 10uF 20% 50V
C105	1-164-156-11	s	CERAMIC, CHIP 0.1uF 25V
C106	1-135-216-11	s	TANTALUM, CHIP 10uF 20% 10V
C107	1-135-216-11	s	TANTALUM, CHIP 10uF 20% 10V
C108	1-135-216-11	s	TANTALUM, CHIP 10uF 20% 10V
C109	1-164-156-11	s	CERAMIC, CHIP 0.1uF 25V
C110	1-164-156-11	s	CERAMIC, CHIP 0.1uF 25V
C111	1-164-156-11	s	CERAMIC, CHIP 0.1uF 25V
C112	1-135-149-21	s	TANTALUM, CHIP 2.2uF 10% 10V
C113-117	1-135-209-11	s	TANTALUM, CHIP 3.3uF 20% 10V
C118	1-164-004-11	s	CERAMIC, CHIP 0.1uF 10% 25V
C119	1-162-968-11	s	CERAMIC, CHIP 0.0047uF 10% 50V
C120	1-162-970-11	s	CERAMIC, CHIP 0.01uF 10% 25V
C121	1-162-970-11	s	CERAMIC, CHIP 0.01uF 10% 25V
C122	1-164-227-11	s	CERAMIC, CHIP 0.022uF 10% 25V
C123	1-164-227-11	s	CERAMIC, CHIP 0.022uF 10% 25V
C124	1-164-227-11	s	CERAMIC, CHIP 0.022uF 10% 25V
C125	1-164-227-11	s	CERAMIC, CHIP 0.022uF 10% 25V
C126	1-164-004-11	s	CERAMIC, CHIP 0.1uF 10% 25V
C127	1-162-970-11	s	CERAMIC, CHIP 0.01uF 10% 25V
C128	1-164-227-11	s	CERAMIC, CHIP 0.022uF 10% 25V
C129	1-164-227-11	s	CERAMIC, CHIP 0.022uF 10% 25V
C130	1-164-218-11	s	CERAMIC, CHIP 180PF 50V
C131	1-164-677-11	s	CERAMIC, CHIP 0.033uF 10% 16V
C132-137	1-162-927-11	s	CERAMIC, CHIP 100PF 5% 50V
C138-149	1-164-156-11	s	CERAMIC, CHIP 0.1uF 25V
C150	1-164-677-11	s	CERAMIC, CHIP 0.033uF 10% 16V
D101	8-719-941-09	s	DIODE DAP202U
D102	8-759-030-61	s	IC TL431CM
IC101	8-759-927-99	s	IC MB3761PF
IC102	8-759-066-68	s	IC REF-03GS
IC103	8-759-260-57	s	IC TL1451ACPW-E05
IC104	8-759-260-57	s	IC TL1451ACPW-E05
IC105	8-759-260-57	s	IC TL1451ACPW-E05
Q101	8-729-117-31	s	TRANSISTOR 2SC4177-L5
Q102	8-729-117-31	s	TRANSISTOR 2SC4177-L5
Q103	8-729-029-14	s	TRANSISTOR DTC144EUA-T106
Q104	8-729-028-91	s	TRANSISTOR DTA144EUA-T106
Q105-110	8-729-117-31	s	TRANSISTOR 2SC4177-L5
Q111	8-729-012-35	s	TRANSISTOR 2SK711-BL
Q112	8-729-012-35	s	TRANSISTOR 2SK711-BL
Q113	8-729-012-35	s	TRANSISTOR 2SK711-BL
Q114	8-729-140-63	s	TRANSISTOR 2SA1611-M5M6
Q115	8-729-140-63	s	TRANSISTOR 2SA1611-M5M6
Q116	8-729-140-63	s	TRANSISTOR 2SA1611-M5M6
Q118	8-729-140-63	s	TRANSISTOR 2SA1611-M5M6
Q120	8-729-140-63	s	TRANSISTOR 2SA1611-M5M6
Q121	8-729-117-31	s	TRANSISTOR 2SC4177-L5
Q122	8-729-140-63	s	TRANSISTOR 2SA1611-M5M6
Q123	8-729-117-31	s	TRANSISTOR 2SC4177-L5
Q124	8-729-140-63	s	TRANSISTOR 2SA1611-M5M6
Q125	8-729-117-31	s	TRANSISTOR 2SC4177-L5
Q126	8-729-140-63	s	TRANSISTOR 2SA1611-M5M6

(PSW-31B BOARD)

Ref. No. or Q'ty	Part No.	SP	Description
Q127	8-729-117-31	s	TRANSISTOR 2SC4177-L5
Q128	8-729-140-63	s	TRANSISTOR 2SA1611-M5M6
Q129	8-729-140-63	s	TRANSISTOR 2SA1611-M5M6
Q130	8-729-140-63	s	TRANSISTOR 2SA1611-M5M6
Q131	8-729-140-63	s	TRANSISTOR 2SA1611-M5M6
Q132	8-729-927-68	s	TRANSISTOR UMW1
Q133	8-729-927-68	s	TRANSISTOR UMW1
Q134	8-729-927-68	s	TRANSISTOR UMW1
Q135	8-729-209-06	s	TRANSISTOR 2SC4213-A
Q136	8-729-209-06	s	TRANSISTOR 2SC4213-A
Q137	8-729-209-06	s	TRANSISTOR 2SC4213-A
R101	1-218-881-11	s	METAL, CHIP 27K 0.5% 1/16W
R102	1-218-707-11	s	METAL, CHIP 4.3K 0.5% 1/16W
R103	1-218-740-11	s	METAL, CHIP 100K 0.5% 1/16W
R104	1-216-845-11	s	METAL, CHIP 100K 5% 1/16W
R105	1-216-845-11	s	METAL, CHIP 100K 5% 1/16W
R106	1-216-817-11	s	METAL, CHIP 470 5% 1/16W
R107	1-216-846-11	s	METAL, CHIP 120K 5% 1/16W
R108	1-216-846-11	s	METAL, CHIP 120K 5% 1/16W
R109	1-216-843-11	s	METAL, CHIP 68K 5% 1/16W
R110	1-216-846-11	s	METAL, CHIP 120K 5% 1/16W
R111	1-216-843-11	s	METAL, CHIP 68K 5% 1/16W
R112	1-216-846-11	s	METAL, CHIP 120K 5% 1/16W
R113	1-216-843-11	s	METAL, CHIP 68K 5% 1/16W
R114	1-216-846-11	s	METAL, CHIP 120K 5% 1/16W
R115	1-216-843-11	s	METAL, CHIP 68K 5% 1/16W
R116	1-216-846-11	s	METAL, CHIP 120K 5% 1/16W
R117	1-216-843-11	s	METAL, CHIP 68K 5% 1/16W
R118	1-216-846-11	s	METAL, CHIP 120K 5% 1/16W
R119-126	1-218-367-11	s	METAL, CHIP 10K 0.1% 1/10W
R127-132	1-216-809-11	s	METAL, CHIP 100 5% 1/16W
R133	1-219-711-11	s	METAL, CHIP 220 0.1% 1/10W
R134	1-219-714-11	s	METAL, CHIP 820 0.1% 1/10W
R135	1-219-712-11	s	METAL, CHIP 390 0.1% 1/10W
R136	1-219-713-11	s	METAL, CHIP 620 0.1% 1/10W
R137	1-219-710-11	s	METAL, CHIP 100 0.1% 1/10W
R138	1-218-182-11	s	METAL, CHIP 270 0.1% 1/16W
R139	1-219-715-11	s	METAL, CHIP 5.1K 0.1% 1/10W
R140	1-219-715-11	s	METAL, CHIP 5.1K 0.1% 1/10W
R141	1-219-715-11	s	METAL, CHIP 5.1K 0.1% 1/10W
R142	1-211-998-11	s	METAL, CHIP 4.7K 0.1% 1/10W
R143	1-219-715-11	s	METAL, CHIP 5.1K 0.1% 1/10W
R144	1-219-716-11	s	METAL, CHIP 5.6K 0.1% 1/10W
R145	1-218-367-11	s	METAL, CHIP 10K 0.1% 1/10W
R146	1-216-687-11	s	METAL, CHIP 33K 0.5% 1/10W
R147	1-219-717-11	s	METAL, CHIP 18K 0.1% 1/10W
R148	1-219-391-21	s	METAL, CHIP 47K 0.1% 1/10W
R149	1-216-677-11	s	METAL, CHIP 12K 0.5% 1/10W
R150	1-216-674-11	s	METAL, CHIP 9.1K 0.5% 1/10W
R151	1-216-684-11	s	METAL, CHIP 24K 0.5% 1/10W
R152	1-216-833-11	s	METAL, CHIP 10K 5% 1/16W
R153	1-216-829-11	s	METAL, CHIP 4.7K 5% 1/16W
R154	1-218-367-11	s	METAL, CHIP 10K 0.1% 1/10W
R155	1-216-829-11	s	METAL, CHIP 4.7K 5% 1/16W
R156	1-216-835-11	s	METAL, CHIP 15K 5% 1/16W
R157	1-216-833-11	s	METAL, CHIP 10K 5% 1/16W
R158	1-216-825-11	s	METAL, CHIP 2.2K 5% 1/16W
R159	1-216-833-11	s	METAL, CHIP 10K 5% 1/16W

(PSW-31B BOARD)

Ref. No. or Q'ty	Part No.	SP	Description
R160	1-216-833-11	s	METAL, CHIP 10K 5% 1/16W
R161-166	1-216-813-11	s	METAL, CHIP 220 5% 1/16W
R167	1-216-840-11	s	METAL, CHIP 39K 5% 1/16W
R168	1-216-807-11	s	METAL, CHIP 68 5% 1/16W
R169	1-216-807-11	s	METAL, CHIP 68 5% 1/16W
R170	1-216-807-11	s	METAL, CHIP 68 5% 1/16W
R171	1-216-833-11	s	METAL, CHIP 10K 5% 1/16W
R172	1-218-272-11	s	METAL, CHIP 5.1K 5% 1/16W
R173	1-216-833-11	s	METAL, CHIP 10K 5% 1/16W
R174	1-216-829-11	s	METAL, CHIP 4.7K 5% 1/16W
R175	1-216-816-11	s	METAL, CHIP 390 5% 1/16W
R177	1-216-812-11	s	METAL, CHIP 180 5% 1/16W
R176	1-216-829-11	s	METAL, CHIP 4.7K 5% 1/16W
R178	1-216-812-11	s	METAL, CHIP 180 5% 1/16W
R179	1-216-812-11	s	METAL, CHIP 180 5% 1/16W
R180	1-216-809-11	s	METAL, CHIP 100 5% 1/16W
R181	1-216-809-11	s	METAL, CHIP 100 5% 1/16W
R182	1-216-809-11	s	METAL, CHIP 100 5% 1/16W
R183	1-216-845-11	s	METAL, CHIP 100K 5% 1/16W
R184	1-216-845-11	s	METAL, CHIP 100K 5% 1/16W
R185	1-216-845-11	s	METAL, CHIP 100K 5% 1/16W
R186	1-216-822-11	s	METAL, CHIP 1.2K 5% 1/16W
R187	1-216-840-11	s	METAL, CHIP 39K 5% 1/16W
R188	1-216-822-11	s	METAL, CHIP 1.2K 5% 1/16W
R189	1-216-840-11	s	METAL, CHIP 39K 5% 1/16W
R190	1-216-822-11	s	METAL, CHIP 1.2K 5% 1/16W
R191	1-216-840-11	s	METAL, CHIP 39K 5% 1/16W
R192	1-216-831-11	s	METAL, CHIP 6.8K 5% 1/16W
R193	1-216-831-11	s	METAL, CHIP 6.8K 5% 1/16W
R194	1-216-831-11	s	METAL, CHIP 6.8K 5% 1/16W
R195	1-216-825-11	s	METAL, CHIP 2.2K 5% 1/16W
R196	1-216-825-11	s	METAL, CHIP 2.2K 5% 1/16W
R197	1-216-825-11	s	METAL, CHIP 2.2K 5% 1/16W
R198	1-216-814-11	s	METAL, CHIP 270 5% 1/16W
R199	1-216-840-11	s	METAL, CHIP 39K 5% 1/16W
R200	1-216-814-11	s	METAL, CHIP 270 5% 1/16W
R201	1-216-840-11	s	METAL, CHIP 39K 5% 1/16W
R202	1-216-814-11	s	METAL, CHIP 270 5% 1/16W
R203	1-216-840-11	s	METAL, CHIP 39K 5% 1/16W
TH101	1-809-308-21	s	THERMISTOR, CHIP 3.3K
TH102	1-809-308-21	s	THERMISTOR, CHIP 3.3K
TH103	1-809-308-21	s	THERMISTOR, CHIP 3.3K

PSW-31C BOARD

Ref. No. or Q'ty	Part No.	SP	Description
1pc	A-8269-442-A	s	POWER ASSY [for J]
	A-8269-463-A	s	POWER ASSY [for US,SY]
C301	1-135-216-11	s	TANTALUM, CHIP 10uF 20% 10V
C302	1-135-216-11	s	TANTALUM, CHIP 10uF 20% 10V
C303	1-163-038-00	s	CERAMIC 0.1uF 25V
C304	1-164-489-11	s	CERAMIC, CHIP 0.22uF 10% 16V
C305	1-164-489-11	s	CERAMIC, CHIP 0.22uF 10% 16V
C306	1-164-489-11	s	CERAMIC, CHIP 0.22uF 10% 16V
C307	1-163-989-11	s	CERAMIC, CHIP 0.033uF 10% 25V
C308	1-163-251-11	s	CERAMIC, CHIP 100PF 5% 50V
C309	1-163-038-00	s	CERAMIC 0.1uF 25V
C310	1-163-038-00	s	CERAMIC 0.1uF 25V
C311	1-127-513-00	s	ALUMN SOLID 15uF 20% 25V
C312	1-111-156-11	s	ELECT 5.6uF 20% 100V
C313	1-111-156-11	s	ELECT 5.6uF 20% 100V
D301	8-719-901-83	s	DIODE 1SS83
FB301	1-543-821-11	s	BEAD, AMORPHOUS
IC301	8-759-937-36	s	IC TL1451ACNS
L301	1-424-517-11	s	COIL, CHOKE 200UH
Q301	8-729-117-31	s	TRANSISTOR 2SC4177-L5
Q302	8-729-140-63	s	TRANSISTOR 2SA1611-M5M6
Q303	8-729-120-53	s	TRANSISTOR 2SJ132-Z
Q304	8-729-143-13	s	TRANSISTOR 2SC4176-B34
Q305	8-729-117-31	s	TRANSISTOR 2SC4177-L5
Q306	8-729-140-63	s	TRANSISTOR 2SA1611-M5M6
Q307	8-729-032-71	s	TRANSISTOR 2SK1949L
R301	1-216-105-00	s	METAL, CHIP 220K 5% 1/10W
R302	1-216-111-00	s	METAL, CHIP 390K 5% 1/10W
R303	1-216-025-00	s	METAL, CHIP 100 5% 1/10W
R304	1-218-182-11	s	METAL, CHIP 270 0.1% 1/16W
R305	1-219-715-11	s	METAL, CHIP 5.1K 0.1% 1/10W
R306	1-218-367-11	s	METAL, CHIP 10K 0.1% 1/10W
R307	1-218-367-11	s	METAL, CHIP 10K 0.1% 1/10W
R308	1-220-154-11	s	METAL, CHIP 100K 0.1% 1/10W
R309	1-220-154-11	s	METAL, CHIP 100K 0.1% 1/10W
R310	1-216-033-00	s	METAL, CHIP 220 5% 1/10W
R311	1-219-724-11	s	METAL 1 1% 1/4W
R312	1-219-724-11	s	METAL 1 1% 1/4W
R313	1-216-025-00	s	METAL, CHIP 100 5% 1/10W
R314	1-216-051-00	s	METAL, CHIP 1.2K 5% 1/10W
R315	1-216-689-11	s	METAL, CHIP 39K 0.5% 1/10W
R316	1-216-073-00	s	METAL, CHIP 10K 5% 1/10W
R317	1-216-073-00	s	METAL, CHIP 10K 5% 1/10W
R318	1-216-069-00	s	METAL, CHIP 6.8K 5% 1/10W
R319	1-216-073-00	s	METAL, CHIP 10K 5% 1/10W
R320	1-216-001-00	s	METAL, CHIP 10 5% 1/10W
R321	1-215-857-11	s	METAL 10 5% 1W
TH301	1-809-308-21	s	THERMISTOR, CHIP 3.3K

SE-233 BOARD

Ref. No. or Q'ty	Part No.	SP	Description
1pc	1-657-800-11	o	PRINTED CIRCUIT BOARD, SE-233
CN1	1-764-007-11	s	CONNECTOR, 1.5mm SMD 12P, MALE
S1	1-572-719-11	s	SWITCH, PUSH
S2	1-572-719-11	s	SWITCH, PUSH
S3	1-572-719-11	s	SWITCH, PUSH
S4	1-572-719-11	s	SWITCH, PUSH
S7-11	1-572-719-11	s	SWITCH, PUSH

SST-3/3P BOARD

Ref. No. or Q'ty	Part No.	SP	Description
1pc	A-8276-910-A	o	MOUNTED CIRCUIT BOARD, SST-3 [for NTSC]
	A-8276-912-A	o	MOUNTED CIRCUIT BOARD, SST-3P [for PAL]
1pc	3-509-140-00	o	HOLDER, WIRE
BT111	1-528-292-11	o	BATTERY, SUPER LITHIUM
C1	1-126-096-11	s	ELECT 10uF 20% 35V
C2	1-124-242-00	s	ELECT 33uF 20% 25V
C3	1-163-038-00	s	CERAMIC 0.1uF 25V
C4	1-163-235-11	s	CERAMIC, CHIP 22PF 5% 50V
C5	1-163-235-11	s	CERAMIC, CHIP 22PF 5% 50V
C6	1-163-038-00	s	CERAMIC 0.1uF 25V
C7	1-163-038-00	s	CERAMIC 0.1uF 25V
C8	1-164-232-11	s	CERAMIC, CHIP 0.01uF 10% 100V
C9	1-163-038-00	s	CERAMIC 0.1uF 25V
C10	1-163-227-11	s	CERAMIC, CHIP 10PF 5% 50V
C11	1-163-222-11	s	CERAMIC, CHIP 5PF 50V
C12	1-164-346-11	s	CERAMIC 1uF 16V
C13	1-164-346-11	s	CERAMIC 1uF 16V
C14	1-128-126-11	s	ELECT 100uF 20% 25V
C15	1-163-133-00	s	CERAMIC, CHIP 470PF 5% 50V
C16	1-128-126-11	s	ELECT 100uF 20% 25V
C17	1-126-398-11	s	ELECT, CHIP 4.7uF 20% 35V
C18	1-163-133-00	s	CERAMIC, CHIP 470PF 5% 50V
C19	1-163-133-00	s	CERAMIC, CHIP 470PF 5% 50V
C20	1-126-401-11	s	ELECT, CHIP 1uF 20% 50V
C21	1-126-395-11	s	ELECT, CHIP 22uF 20% 16V
C22	1-126-395-11	s	ELECT, CHIP 22uF 20% 16V
C23	1-163-809-11	s	CERAMIC, CHIP 0.047uF 10% 25V
C24	1-163-038-00	s	CERAMIC 0.1uF 25V
C25	1-163-243-11	s	CERAMIC, CHIP 47PF 5% 50V
C26	1-128-499-11	s	ELECT 220uF 20% 16V
C27	1-128-499-11	s	ELECT 220uF 20% 16V
C28	1-163-038-00	s	CERAMIC 0.1uF 25V
C29	1-163-038-00	s	CERAMIC 0.1uF 25V
C30	1-163-038-00	s	CERAMIC 0.1uF 25V
C31	1-163-038-00	s	CERAMIC 0.1uF 25V
C111	1-126-916-11	s	ELECT 1000uF 20% 6.3V
C112	1-163-038-00	s	CERAMIC 0.1uF 25V
C113	1-163-239-11	s	CERAMIC, CHIP 33PF 5% 50V
C114	1-163-239-11	s	CERAMIC, CHIP 33PF 5% 50V
C115	1-163-038-00	s	CERAMIC 0.1uF 25V
C116	1-163-113-00	s	CERAMIC, CHIP 68PF 5% 50V
C117	1-163-235-11	s	CERAMIC, CHIP 22PF 5% 50V
C118	1-163-235-11	s	CERAMIC, CHIP 22PF 5% 50V
C119	1-163-038-00	s	CERAMIC 0.1uF 25V
C120	1-163-037-11	s	CERAMIC, CHIP 0.022uF 10% 25V
C121	1-126-395-11	s	ELECT, CHIP 22uF 20% 16V
C122	1-126-395-11	s	ELECT, CHIP 22uF 20% 16V
C151	1-163-038-00	s	CERAMIC 0.1uF 25V
C152	1-163-038-00	s	CERAMIC 0.1uF 25V
C153	1-163-037-11	s	CERAMIC, CHIP 0.022uF 10% 25V
C154	1-163-038-00	s	CERAMIC 0.1uF 25V
C155	1-163-038-00	s	CERAMIC 0.1uF 25V
C156	1-163-038-00	s	CERAMIC 0.1uF 25V
C301	1-163-243-11	s	CERAMIC, CHIP 47PF 5% 50V
C302	1-163-239-11	s	CERAMIC, CHIP 33PF 5% 50V

(SST-3/3P BOARD)

Ref. No. or Q'ty	Part No.	SP	Description
C303	1-163-275-11	s	CERAMIC, CHIP 0.001uF 5% 50V
C304	1-163-038-00	s	CERAMIC 0.1uF 25V
C305	1-163-251-11	s	CERAMIC, CHIP 100PF 5% 50V
C306	1-163-121-00	s	CERAMIC, CHIP 150PF 5% 50V
C307	1-163-038-00	s	CERAMIC 0.1uF 25V
C308	1-163-037-11	s	CERAMIC, CHIP 0.022uF 10% 25V
C309	1-163-037-11	s	CERAMIC, CHIP 0.022uF 10% 25V
C310	1-163-037-11	s	CERAMIC, CHIP 0.022uF 10% 25V
C351-358	1-163-038-00	s	CERAMIC 0.1uF 25V
C401	1-163-037-11	s	CERAMIC, CHIP 0.022uF 10% 25V
C402	1-163-275-11	s	CERAMIC, CHIP 0.001uF 5% 50V
C403	1-163-037-11	s	CERAMIC, CHIP 0.022uF 10% 25V
C404	1-163-275-11	s	CERAMIC, CHIP 0.001uF 5% 50V
C405	1-163-037-11	s	CERAMIC, CHIP 0.022uF 10% 25V
C406	1-163-037-11	s	CERAMIC, CHIP 0.022uF 10% 25V
C407	1-163-251-11	s	CERAMIC, CHIP 100PF 5% 50V
C408	1-163-037-11	s	CERAMIC, CHIP 0.022uF 10% 25V
C409	1-126-096-11	s	ELECT 10uF 20% 35V
C410	1-163-037-11	s	CERAMIC, CHIP 0.022uF 10% 25V
C411	1-163-037-11	s	CERAMIC, CHIP 0.022uF 10% 25V
C412	1-163-809-11	s	CERAMIC, CHIP 0.047uF 10% 25V
C413	1-163-143-00	s	CERAMIC, CHIP 0.0012uF 5% 50V
C414	1-163-143-00	s	CERAMIC, CHIP 0.0012uF 5% 50V
C415	1-164-004-11	s	CERAMIC, CHIP 0.1uF 10% 25V
C416	1-164-004-11	s	CERAMIC, CHIP 0.1uF 10% 25V
C417	1-163-809-11	s	CERAMIC, CHIP 0.047uF 10% 25V
C418	1-163-809-11	s	CERAMIC, CHIP 0.047uF 10% 25V
C419	1-163-263-11	s	CERAMIC, CHIP 330PF 5% 50V
C420	1-163-263-11	s	CERAMIC, CHIP 330PF 5% 50V
C421	1-163-091-00	s	CERAMIC, CHIP 8PF 50V
C422	1-163-091-00	s	CERAMIC, CHIP 8PF 50V
C423	1-163-809-11	s	CERAMIC, CHIP 0.047uF 10% 25V
C424	1-163-809-11	s	CERAMIC, CHIP 0.047uF 10% 25V
C425	1-163-037-11	s	CERAMIC, CHIP 0.022uF 10% 25V
C426	1-163-037-11	s	CERAMIC, CHIP 0.022uF 10% 25V
C427	1-163-037-11	s	CERAMIC, CHIP 0.022uF 10% 25V
C428	1-163-037-11	s	CERAMIC, CHIP 0.022uF 10% 25V
C432-449	1-163-038-00	s	CERAMIC 0.1uF 25V
C450	1-163-037-11	s	CERAMIC, CHIP 0.022uF 10% 25V
C451	1-163-037-11	s	CERAMIC, CHIP 0.022uF 10% 25V
C452	1-163-037-11	s	CERAMIC, CHIP 0.022uF 10% 25V
C453	1-163-809-11	s	CERAMIC, CHIP 0.047uF 10% 25V
C454	1-163-809-11	s	CERAMIC, CHIP 0.047uF 10% 25V
C455	1-164-695-11	s	CERAMIC 0.0022uF 5% 50V
C456	1-164-695-11	s	CERAMIC 0.0022uF 5% 50V
C457	1-164-695-11	s	CERAMIC 0.0022uF 5% 50V
C458	1-164-695-11	s	CERAMIC 0.0022uF 5% 50V
C459	1-164-489-11	s	CERAMIC, CHIP 0.22uF 10% 16V
C501	1-163-809-11	s	CERAMIC, CHIP 0.047uF 10% 25V
C502	1-163-037-11	s	CERAMIC, CHIP 0.022uF 10% 25V
C503	1-163-037-11	s	CERAMIC, CHIP 0.022uF 10% 25V
C504	1-164-695-11	s	CERAMIC 0.0022uF 5% 50V
C505	1-164-695-11	s	CERAMIC 0.0022uF 5% 50V
C506	1-163-113-00	s	CERAMIC, CHIP 68PF 5% 50V
C507	1-163-037-11	s	CERAMIC, CHIP 0.022uF 10% 25V
C508	1-163-113-00	s	CERAMIC, CHIP 68PF 5% 50V
C509	1-163-017-00	s	CERAMIC, CHIP 0.0047uF 5% 50V
C510	1-163-017-00	s	CERAMIC, CHIP 0.0047uF 5% 50V
C515	1-163-037-11	s	CERAMIC, CHIP 0.022uF 10% 25V

(SST-3/3P BOARD)

Ref. No. or Q'ty	Part No.	SP	Description
C516	1-163-037-11	s	CERAMIC, CHIP 0.022uF 10% 25V
C517	1-163-037-11	s	CERAMIC, CHIP 0.022uF 10% 25V
C519	1-163-989-11	s	CERAMIC, CHIP 0.033uF 10% 25V
C520-524	1-163-037-11	s	CERAMIC, CHIP 0.022uF 10% 25V
C601	1-163-989-11	s	CERAMIC, CHIP 0.033uF 10% 25V
C602	1-163-037-11	s	CERAMIC, CHIP 0.022uF 10% 25V
C603	1-163-989-11	s	CERAMIC, CHIP 0.033uF 10% 25V
C604	1-163-121-00	s	CERAMIC, CHIP 150PF 5% 50V
C605	1-163-989-11	s	CERAMIC, CHIP 0.033uF 10% 25V
C606	1-163-127-00	s	CERAMIC, CHIP 270PF 5% 50V
C607	1-126-946-11	s	ELECT 6800uF 20% 25V
C608	1-164-232-11	s	CERAMIC, CHIP 0.01uF 10% 100V
C609	1-163-037-11	s	CERAMIC, CHIP 0.022uF 10% 25V
C610	1-164-695-11	s	CERAMIC 0.0022uF 5% 50V
C611	1-163-037-11	s	CERAMIC, CHIP 0.022uF 10% 25V
C612	1-163-037-11	s	CERAMIC, CHIP 0.022uF 10% 25V
C613	1-163-037-11	s	CERAMIC, CHIP 0.022uF 10% 25V
C614	1-163-127-00	s	CERAMIC, CHIP 270PF 5% 50V
C615	1-163-038-00	s	CERAMIC 0.1uF 25V
C616	1-126-022-11	s	ELECT 47uF 20% 25V
C617	1-164-695-11	s	CERAMIC 0.0022uF 5% 50V
C618	1-163-038-00	s	CERAMIC 0.1uF 25V
C619	1-163-037-11	s	CERAMIC, CHIP 0.022uF 10% 25V
C620	1-126-022-11	s	ELECT 47uF 20% 25V
C621	1-163-038-00	s	CERAMIC 0.1uF 25V
C622	1-126-022-11	s	ELECT 47uF 20% 25V
C623	1-126-022-11	s	ELECT 47uF 20% 25V
C624	1-163-038-00	s	CERAMIC 0.1uF 25V
C625	1-163-989-11	s	CERAMIC, CHIP 0.033uF 10% 25V
C626	1-163-989-11	s	CERAMIC, CHIP 0.033uF 10% 25V
C627	1-163-809-11	s	CERAMIC, CHIP 0.047uF 10% 25V
C628	1-163-809-11	s	CERAMIC, CHIP 0.047uF 10% 25V
C629	1-163-809-11	s	CERAMIC, CHIP 0.047uF 10% 25V
C631	1-163-809-11	s	CERAMIC, CHIP 0.047uF 10% 25V
C632	1-163-809-11	s	CERAMIC, CHIP 0.047uF 10% 25V
C633	1-163-037-11	s	CERAMIC, CHIP 0.022uF 10% 25V
C634	1-163-037-11	s	CERAMIC, CHIP 0.022uF 10% 25V
C635	1-163-809-11	s	CERAMIC, CHIP 0.047uF 10% 25V
C637-642	1-163-037-11	s	CERAMIC, CHIP 0.022uF 10% 25V
C643	1-163-251-11	s	CERAMIC, CHIP 100PF 5% 50V
C644	1-163-251-11	s	CERAMIC, CHIP 100PF 5% 50V
C645	1-126-022-11	s	ELECT 47uF 20% 25V
C646	1-126-022-11	s	ELECT 47uF 20% 25V
C647	1-126-022-11	s	ELECT 47uF 20% 25V
C648	1-126-022-11	s	ELECT 47uF 20% 25V
C649	1-163-251-11	s	CERAMIC, CHIP 100PF 5% 50V
C650	1-163-251-11	s	CERAMIC, CHIP 100PF 5% 50V
C651	1-126-096-11	s	ELECT 10uF 20% 35V
C652	1-163-037-11	s	CERAMIC, CHIP 0.022uF 10% 25V
C801	1-165-112-11	s	CERAMIC 0.33uF 16V
C802	1-164-004-11	s	CERAMIC, CHIP 0.1uF 10% 25V
C803	1-135-166-21	s	TANTALUM, CHIP 47uF 10% 10V
C804	1-163-251-11	s	CERAMIC, CHIP 100PF 5% 50V
C805	1-135-166-21	s	TANTALUM, CHIP 47uF 10% 10V
C806	1-104-547-11	s	FILM, CHIP 0.0047uF 5% 16V [for NTSC]
	1-107-553-11	s	FILM, CHIP 0.0056uF 2% 16V [for PAL]
C851	1-126-394-11	s	ELECT, CHIP 10uF 20% 16V

(SST-3/3P BOARD)

Ref. No. or Q'ty	Part No.	SP	Description
C852	1-126-394-11	s	ELECT, CHIP 10uF 20% 16V
C853	1-104-553-11	s	FILM, CHIP 0.015uF 5% 16V
C854	1-135-201-11	s	TANTALUM, CHIP 10uF 20% 6.3V
C855	1-135-201-11	s	TANTALUM, CHIP 10uF 20% 6.3V
C856	1-163-125-00	s	CERAMIC, CHIP 220PF 5% 50V
C857	1-163-038-00	s	CERAMIC 0.1uF 25V
C858	1-163-038-00	s	CERAMIC 0.1uF 25V
C859	1-163-038-00	s	CERAMIC 0.1uF 25V
C860	1-163-038-00	s	CERAMIC 0.1uF 25V
C861	1-163-121-00	s	CERAMIC, CHIP 150PF 5% 50V
C901	1-126-394-11	s	ELECT, CHIP 10uF 20% 16V
C902	1-126-394-11	s	ELECT, CHIP 10uF 20% 16V
C903	1-163-017-00	s	CERAMIC, CHIP 0.0047uF 5% 50V
C904	1-104-552-11	s	FILM, CHIP 0.012uF 5% 16V
C905	1-104-563-11	s	FILM, CHIP 0.1uF 5% 16V
C906	1-135-318-11	s	TANTALUM, CHIP 33uF 20% 4V
C907	1-135-318-11	s	TANTALUM, CHIP 33uF 20% 4V
C908	1-135-201-11	s	TANTALUM, CHIP 10uF 20% 6.3V
C909	1-163-125-00	s	CERAMIC, CHIP 220PF 5% 50V
C910	1-163-038-00	s	CERAMIC 0.1uF 25V
C911	1-163-038-00	s	CERAMIC 0.1uF 25V
C912	1-163-038-00	s	CERAMIC 0.1uF 25V
C913	1-163-038-00	s	CERAMIC 0.1uF 25V
C914	1-163-121-00	s	CERAMIC, CHIP 150PF 5% 50V
C915	1-163-037-11	s	CERAMIC, CHIP 0.022uF 10% 25V
C941	1-135-216-11	s	TANTALUM, CHIP 10uF 20% 10V
C942	1-163-017-00	s	CERAMIC, CHIP 0.0047uF 5% 50V
C943	1-163-017-00	s	CERAMIC, CHIP 0.0047uF 5% 50V
C944	1-164-004-11	s	CERAMIC, CHIP 0.1uF 10% 25V
C945	1-164-232-11	s	CERAMIC, CHIP 0.01uF 10% 100V
C946	1-126-395-11	s	ELECT, CHIP 22uF 20% 16V
C947	1-163-017-00	s	CERAMIC, CHIP 0.0047uF 5% 50V
C948	1-109-898-11	s	CERAMIC, CHIP 0.018uF 5% 100V
C949	1-109-897-11	s	CERAMIC, CHIP 0.015uF 5% 100V
C961	1-135-216-11	s	TANTALUM, CHIP 10uF 20% 10V
C962	1-163-017-00	s	CERAMIC, CHIP 0.0047uF 5% 50V
C963	1-163-017-00	s	CERAMIC, CHIP 0.0047uF 5% 50V
C964	1-164-004-11	s	CERAMIC, CHIP 0.1uF 10% 25V
C965	1-164-232-11	s	CERAMIC, CHIP 0.01uF 10% 100V
C966	1-126-395-11	s	ELECT, CHIP 22uF 20% 16V
C967	1-163-017-00	s	CERAMIC, CHIP 0.0047uF 5% 50V
C968	1-109-898-11	s	CERAMIC, CHIP 0.018uF 5% 100V
C969	1-109-897-11	s	CERAMIC, CHIP 0.015uF 5% 100V
C981	1-163-038-00	s	CERAMIC 0.1uF 25V
C982	1-163-038-00	s	CERAMIC 0.1uF 25V
C983	1-126-396-11	s	ELECT, CHIP 47uF 20% 16V
C984	1-126-396-11	s	ELECT, CHIP 47uF 20% 16V
C985	1-163-038-00	s	CERAMIC 0.1uF 25V
C986	1-163-038-00	s	CERAMIC 0.1uF 25V
C987	1-163-038-00	s	CERAMIC 0.1uF 25V
C988	1-163-038-00	s	CERAMIC 0.1uF 25V
C989	1-163-037-11	s	CERAMIC, CHIP 0.022uF 10% 25V
C990	1-163-037-11	s	CERAMIC, CHIP 0.022uF 10% 25V
C991	1-163-038-00	s	CERAMIC 0.1uF 25V
C992	1-163-038-00	s	CERAMIC 0.1uF 25V
C993	1-163-038-00	s	CERAMIC 0.1uF 25V
C994	1-163-038-00	s	CERAMIC 0.1uF 25V
CN1	1-506-469-11	s	CONNECTOR 4P, MALE

(SST-3/3P BOARD)

Ref. No. or Q'ty	Part No.	SP	Description
CN101	1-566-767-11	o	CONNECTOR 12P, MALE
CN102	1-506-469-11	s	CONNECTOR 4P, MALE
CN103	1-566-766-11	o	CONNECTOR 11P, MALE
CN104	1-566-765-11	o	CONNECTOR 10P, MALE
CN105	1-566-760-11	s	CONNECTOR, ZR 5P, MALE
CN106	1-565-772-11	o	CONNECTOR, PS 10P, MALE
CN107	1-566-764-11	o	CONNECTOR 9P, MALE
CN108	1-566-765-11	o	CONNECTOR 10P, MALE
CN109	1-566-761-11	o	CONNECTOR 6P, MALE
CN110	1-580-716-11	o	CONNECTOR 13P, MALE
CN111	1-566-760-11	s	CONNECTOR, ZR 5P, MALE
CN112	1-566-760-11	s	CONNECTOR, ZR 5P, MALE
CN113	1-506-482-11	s	CONNECTOR 3P, MALE
CN114	1-506-467-11	o	CONNECTOR 2P, MALE
CN115	1-566-759-11	o	CONNECTOR 4P, MALE
CN501	1-564-004-11	o	CONNECTOR, 5P, MALE
CN901	1-774-267-11	s	CONNECTOR, BOARD TO BOARD 20P
CN902	1-774-269-11	s	CONNECTOR, BOARD TO BOARD 30P
CN903	1-774-269-11	s	CONNECTOR, BOARD TO BOARD 30P
CN904	1-774-269-11	s	CONNECTOR, BOARD TO BOARD 30P
CN905	1-774-269-11	s	CONNECTOR, BOARD TO BOARD 30P
CNI24	1-526-662-21	o	SOCKET, IC (DP) 40P
CNI413	1-540-119-11	o	SOCKET, IC (IC113) 44P
CT941	1-424-511-11	s	TRANSFORMER, FE
CT961	1-424-511-11	s	TRANSFORMER, FE
CV111	1-141-368-11	s	CAP, TRIMMER, CHIP 30PF
D1	8-719-911-19	s	DIODE 1SS119
D2	8-719-820-12	s	DIODE TLR224
D3	8-719-987-87	s	DIODE ERA85-009
D4	8-719-975-85	s	DIODE ERB83-004
D5	8-719-941-86	s	DIODE DAN202U
D6	8-719-987-87	s	DIODE ERA85-009
D7	8-719-987-87	s	DIODE ERA85-009
D8	8-719-109-98	s	DIODE 1SS97-0
D111	8-719-902-27	s	LED EBR3402S, RED
D113	8-719-987-87	s	DIODE ERA85-009
D114	8-719-941-86	s	DIODE DAN202U
D115	8-719-941-86	s	DIODE DAN202U
D301	8-719-941-86	s	DIODE DAN202U
D302	8-719-941-09	s	DIODE DAP202U
D351-358	8-719-977-34	s	DIODE DTZ12
D401	8-719-941-09	s	DIODE DAP202U
D402	8-719-941-09	s	DIODE DAP202U
D403-409	8-719-987-87	s	DIODE ERA85-009
D410	8-719-975-56	s	DIODE 1SS120A
D501	8-719-913-37	s	DIODE GP-1A06
D502	8-719-913-37	s	DIODE GP-1A06
D505	8-719-989-22	s	DIODE CL-150R-CD
D506	8-719-989-22	s	DIODE CL-150R-CD
D507	8-719-989-22	s	DIODE CL-150R-CD
D508	8-719-989-22	s	DIODE CL-150R-CD
D601	8-719-106-53	s	DIODE RD10M-B2
D602	8-719-975-85	s	DIODE ERB83-004
D603	8-719-975-85	s	DIODE ERB83-004
D604	8-719-106-88	s	DIODE RD15M-B1
D605	8-719-941-86	s	DIODE DAN202U

(SST-3/3P BOARD)

Ref. No. or Q'ty	Part No.	SP	Description
D606	8-719-941-86	s	DIODE DAN202U
D607	8-719-975-85	s	DIODE ERB83-004
D608	8-719-975-85	s	DIODE ERB83-004
D609	8-719-941-86	s	DIODE DAN202U
D610	8-719-941-86	s	DIODE DAN202U
D611	8-719-941-23	s	DIODE DA204U
D612	8-719-941-23	s	DIODE DA204U
D614	8-719-109-76	s	DIODE RD4.3ESB3
D615	8-719-109-76	s	DIODE RD4.3ESB3
D801	8-719-941-23	s	DIODE DA204U
D802	8-719-941-23	s	DIODE DA204U
D803	8-719-105-28	s	DIODE RD2.4M-B
D804	8-719-105-28	s	DIODE RD2.4M-B
D941	8-719-941-86	s	DIODE DAN202U
D961	8-719-941-86	s	DIODE DAN202U
D962	8-719-801-48	s	DIODE 1SS193
FB1	1-543-309-21	s	BEAD, FERRITE
FB601	1-543-309-21	s	BEAD, FERRITE
FB602	1-543-309-21	s	BEAD, FERRITE
FB603	1-543-309-21	s	BEAD, FERRITE
IC1	8-759-925-90	s	IC SN74HC74ANS
IC2	8-759-925-90	s	IC SN74HC74ANS
IC3	8-759-186-38	s	IC TC74VHC32F
IC4	8-759-985-18	s	IC 74AC08SJ
IC5	8-759-209-15	s	IC TC4SU69F
IC6	8-759-985-22	s	IC 74AC11SJ
IC7	8-759-985-17	s	IC 74AC04SJ
IC8	8-759-989-91	s	IC TL7705ACPS
IC9	8-759-925-74	s	IC TC74HC04ANS
IC10	8-759-926-77	s	IC SN74HC541ANS
IC11	8-759-925-75	s	IC SN74HC05ANS
IC12	8-759-925-90	s	IC SN74HC74ANS
IC13	8-759-925-90	s	IC SN74HC74ANS
IC14	8-759-985-78	s	IC 74AC541SJ
IC15	8-759-361-52	s	IC MC68340FE16C
IC16	8-759-985-26	s	IC 74AC74SJ
IC17	8-759-985-26	s	IC 74AC74SJ
IC18	8-759-985-33	s	IC 74AC139SJ
IC19	8-759-985-25	s	IC 74AC32SJ
IC20	8-759-985-25	s	IC 74AC32SJ
IC21	8-759-985-25	s	IC 74AC32SJ
IC22	8-759-985-26	s	IC 74AC74SJ
IC23	8-759-985-26	s	IC 74AC74SJ
IC25	8-752-337-79	s	IC CXK58257AM-10LL
IC26	8-752-337-79	s	IC CXK58257AM-10LL
IC27	8-759-985-25	s	IC 74AC32SJ
IC28	8-759-054-54	s	IC SRM2016M10
IC29	8-759-937-36	s	IC TL1451ACNS
IC30	8-759-009-05	s	IC MC14051BF
IC31	8-759-243-26	s	IC TC35080P
IC32	8-759-035-93	s	IC TC7S32F-TE85L
IC33	8-759-195-02	s	IC TC7S86F-TE85R
IC112	8-759-081-42	s	IC TC74VHC00F
IC113	8-759-059-20	s	IC UPD75004GB-755-3B4
IC114	8-759-083-94	s	IC TC7W74FU
IC115	8-759-922-48	s	IC S-8052ALY
IC116	8-759-927-18	s	IC SN74HCT541NS
IC117	8-759-209-15	s	IC TC4SU69F

(SST-3/3P BOARD)

Ref. No. or Q'ty	Part No.	SP	Description
IC118	8-759-175-77	s	IC CXD8384Q
IC119	8-759-300-71	s	IC HD14053BFP
IC120	8-759-348-84	s	IC HM53051FP-60
IC121	8-759-230-14	s	IC TC4S81F(TE85R)
IC122	8-759-031-84	s	IC TC7S04F
IC151	8-759-926-77	s	IC SN74HC541ANS
IC153	8-759-348-79	s	IC TE7751
IC154	8-759-926-77	s	IC SN74HC541ANS
IC155	8-759-926-77	s	IC SN74HC541ANS
IC156	8-759-926-77	s	IC SN74HC541ANS
IC158	8-759-938-68	s	IC CXD1095Q
IC160	8-759-985-17	s	IC 74AC04SJ
IC164	8-759-927-12	s	IC SN74HCT244ANS
IC165	8-759-175-55	s	IC CXD8805Q
IC167	8-759-053-58	s	IC IDT6116SA25SO
IC301	8-759-320-67	s	IC HM6264ALFP-12LTZ
IC302	8-759-999-19	s	IC MB88323A-PF-K2
IC303	8-759-175-56	s	IC CXD8804Q
IC304	8-759-927-18	s	IC SN74HCT541NS
IC306	8-759-926-77	s	IC SN74HC541ANS
IC307	8-759-926-98	s	IC SN74HC4040ANS
IC308	8-759-926-77	s	IC SN74HC541ANS
IC309	8-759-241-49	s	IC TC74HCT540AF
IC310	1-577-382-11	s	VCO, CRYSTAL 16.000MHz
IC311	8-759-927-15	s	IC SN74HCT245NS
IC312	8-759-926-77	s	IC SN74HC541ANS
IC351	8-759-246-11	s	IC T6963C
IC352	8-759-054-54	s	IC SRM2016M10
IC353	8-759-348-83	s	IC LTC1337CS
IC354	8-759-348-82	s	IC LTC491CS-E2
IC355	8-759-356-96	s	IC LT1180ACS-E2
IC401	8-759-983-74	s	IC LM324NS
IC402	8-759-009-05	s	IC MC14051BF
IC403	8-759-009-05	s	IC MC14051BF
IC404	8-759-348-69	s	IC HD6415108RF10
IC405	8-759-294-75	s	IC CAT93C46KI
IC406	8-759-805-32	s	IC LA7205M
IC407	8-759-805-32	s	IC LA7205M
IC409	8-759-053-58	s	IC IDT6116SA25SO
IC410	8-759-053-58	s	IC IDT6116SA25SO
IC411	8-759-925-78	s	IC SN74HC10ANS
IC412	8-759-927-46	s	IC SN74HC00ANS
IC414	8-759-239-55	s	IC TC74HC123AF
IC415	8-759-032-01	s	IC MC74HC00AF
IC501	8-759-983-74	s	IC LM324NS
IC502	8-759-925-05	s	IC LM2903PS
IC504	8-752-343-05	s	IC CXD2202Q
IC505	8-759-983-69	s	IC LM358PS
IC506	8-759-938-68	s	IC CXD1095Q
IC601	8-759-925-05	s	IC LM2903PS
IC602	8-759-983-69	s	IC LM358PS
IC603	8-759-983-69	s	IC LM358PS
IC604	8-759-983-69	s	IC LM358PS
IC605	8-759-925-05	s	IC LM2903PS
IC606	8-759-245-52	s	IC TA7291F
IC607	8-759-245-52	s	IC TA7291F
IC608	8-759-983-74	s	IC LM324NS
IC609	8-759-983-74	s	IC LM324NS
IC610	8-759-925-05	s	IC LM2903PS

(SST-3/3P BOARD)

Ref. No. or Q'ty	Part No.	SP	Description
IC611	8-759-983-69	s	IC LM358PS
IC612	8-759-983-69	s	IC LM358PS
IC801	8-759-173-16	s	IC TL062CPW
IC802	8-759-700-45	s	IC NJM4556M-A
IC803	8-759-209-57	s	IC TC4S69F
IC851	8-759-066-61	s	IC TC4053BFS
IC852	8-759-710-28	s	IC NJM4565M-A
IC853	8-759-700-07	s	IC NJM2903M
IC901	8-759-066-61	s	IC TC4053BFS
IC902	8-759-710-28	s	IC NJM4565M-A
IC903	8-759-700-07	s	IC NJM2903M
IC904	8-759-209-15	s	IC TC4SU69F
IC941	8-759-209-15	s	IC TC4SU69F
IC961	8-759-209-15	s	IC TC4SU69F
L1	1-424-517-11	s	COIL, CHOKE 200uH
L2	1-424-517-11	s	COIL, CHOKE 200uH
L301	1-408-779-31	s	INDUCTOR, CHIP 15uH
L601	1-424-517-11	s	COIL, CHOKE 200uH
L602	1-424-517-11	s	COIL, CHOKE 200uH
L603	1-424-517-11	s	COIL, CHOKE 200uH
L604	1-424-517-11	s	COIL, CHOKE 200uH
L941	1-424-642-11	s	COIL, CHOKE 47uH
L961	1-424-642-11	s	COIL, CHOKE 47uH
L981	1-424-643-11	s	COIL, CHOKE 10uH
L982	1-424-643-11	s	COIL, CHOKE 10uH
LV961	1-414-007-11	s	COIL, VAR 1.5uH
Q1	8-729-117-32	s	TRANSISTOR 2SC4177
Q2	8-729-029-14	s	TRANSISTOR DTC144EUA-T106
Q3	8-729-321-78	s	TRANSISTOR 2SJ176
Q4	8-729-029-14	s	TRANSISTOR DTC144EUA-T106
Q5	8-729-019-03	s	TRANSISTOR 2SB1202FA-T-TL
Q6	8-729-019-03	s	TRANSISTOR 2SB1202FA-T-TL
Q7	8-729-141-75	s	TRANSISTOR 2SD596DV345
Q8	8-729-141-75	s	TRANSISTOR 2SD596DV345
Q9	8-729-140-63	s	TRANSISTOR 2SA1611-M5M6
Q151	8-729-140-63	s	TRANSISTOR 2SA1611-M5M6
Q152	8-729-117-32	s	TRANSISTOR 2SC4177
Q153	8-729-140-63	s	TRANSISTOR 2SA1611-M5M6
Q401	8-729-029-14	s	TRANSISTOR DTC144EUA-T106
Q402	8-729-117-32	s	TRANSISTOR 2SC4177
Q403-409	8-729-143-79	s	TRANSISTOR 2SK738
Q501	8-729-029-14	s	TRANSISTOR DTC144EUA-T106
Q502	8-729-029-14	s	TRANSISTOR DTC144EUA-T106
Q503	8-729-029-14	s	TRANSISTOR DTC144EUA-T106
Q602	8-729-117-32	s	TRANSISTOR 2SC4177
Q603	8-729-019-03	s	TRANSISTOR 2SB1202FA-T-TL
Q604	8-729-029-14	s	TRANSISTOR DTC144EUA-T106
Q605	8-729-140-63	s	TRANSISTOR 2SA1611-M5M6
Q606	8-729-807-16	s	TRANSISTOR 2SD1621
Q607	8-729-019-03	s	TRANSISTOR 2SB1202FA-T-TL
Q608	8-729-118-56	s	TRANSISTOR 2SK852-X2
Q609	8-729-020-93	s	TRANSISTOR 2SC2982C-TE12L
Q610	8-729-029-14	s	TRANSISTOR DTC144EUA-T106
Q611	8-729-029-14	s	TRANSISTOR DTC144EUA-T106
Q612	8-729-019-03	s	TRANSISTOR 2SB1202FA-T-TL
Q613	8-729-019-03	s	TRANSISTOR 2SB1202FA-T-TL
Q614	8-729-140-63	s	TRANSISTOR 2SA1611-M5M6

(SST-3/3P BOARD)

Ref. No. or Q'ty	Part No.	SP	Description
Q615	8-729-140-63	s	TRANSISTOR 2SA1611-M5M6
Q616	8-729-117-32	s	TRANSISTOR 2SC4177
Q617	8-729-117-32	s	TRANSISTOR 2SC4177
Q618-625	8-729-019-03	s	TRANSISTOR 2SB1202FA-T-TL
Q626	8-729-140-63	s	TRANSISTOR 2SA1611-M5M6
Q627	8-729-117-32	s	TRANSISTOR 2SC4177
Q628	8-729-140-63	s	TRANSISTOR 2SA1611-M5M6
Q629	8-729-117-32	s	TRANSISTOR 2SC4177
Q630	8-729-030-03	s	TRANSISTOR DTC144ESA-TP
Q801	8-729-028-91	s	TRANSISTOR DTA144EUA-T106
Q802	8-729-109-44	s	TRANSISTOR 2SK94
Q851	8-729-117-32	s	TRANSISTOR 2SC4177
Q852	8-729-140-63	s	TRANSISTOR 2SA1611-M5M6
Q853	8-729-028-91	s	TRANSISTOR DTA144EUA-T106
Q854	8-729-824-34	s	TRANSISTOR 2SJ187
Q855	8-729-030-95	s	TRANSISTOR 2SK2151-TD
Q856	8-729-209-07	s	TRANSISTOR 2SC4213-B
Q901	8-729-117-32	s	TRANSISTOR 2SC4177
Q902	8-729-140-63	s	TRANSISTOR 2SA1611-M5M6
Q903	8-729-028-91	s	TRANSISTOR DTA144EUA-T106
Q904	8-729-824-34	s	TRANSISTOR 2SJ187
Q905	8-729-030-95	s	TRANSISTOR 2SK2151-TD
Q941	8-729-028-91	s	TRANSISTOR DTA144EUA-T106
Q942	8-729-029-14	s	TRANSISTOR DTC144EUA-T106
Q943	8-729-824-34	s	TRANSISTOR 2SJ187
Q944	8-729-209-07	s	TRANSISTOR 2SC4213-B
Q945	8-729-209-07	s	TRANSISTOR 2SC4213-B
Q961	8-729-028-91	s	TRANSISTOR DTA144EUA-T106
Q962	8-729-029-14	s	TRANSISTOR DTC144EUA-T106
Q963	8-729-824-34	s	TRANSISTOR 2SJ187
Q964	8-729-209-07	s	TRANSISTOR 2SC4213-B
Q965	8-729-209-07	s	TRANSISTOR 2SC4213-B
Q966	8-729-027-56	s	TRANSISTOR DTC143TKA-T146
R1	1-216-073-00	s	METAL, CHIP 10K 5% 1/10W
R2	1-249-406-11	s	CARBON 120 5% 1/4W
R3	1-216-073-00	s	METAL, CHIP 10K 5% 1/10W
R4	1-216-039-00	s	METAL, CHIP 390 5% 1/10W
R5	1-216-073-00	s	METAL, CHIP 10K 5% 1/10W
R6	1-216-089-00	s	METAL, CHIP 47k 5% 1/10W
R7	1-216-073-00	s	METAL, CHIP 10K 5% 1/10W
R8	1-216-057-00	s	METAL, CHIP 2.2K 5% 1/10W
R9	1-216-089-00	s	METAL, CHIP 47k 5% 1/10W
R14	1-216-109-00	s	METAL, CHIP 330K 5% 1/10W
R17	1-218-179-11	s	METAL, CHIP 10M 5% 1/10W
R18	1-218-179-11	s	METAL, CHIP 10M 5% 1/10W
R25	1-216-073-00	s	METAL, CHIP 10K 5% 1/10W
R27-34	1-216-073-00	s	METAL, CHIP 10K 5% 1/10W
R36	1-216-073-00	s	METAL, CHIP 10K 5% 1/10W
R37-41	1-216-089-00	s	METAL, CHIP 47k 5% 1/10W
R42	1-216-097-00	s	METAL, CHIP 100K 5% 1/10W
R43	1-216-041-00	s	METAL, CHIP 470 5% 1/10W
R44	1-216-089-00	s	METAL, CHIP 47k 5% 1/10W
R45	1-216-073-00	s	METAL, CHIP 10K 5% 1/10W
R46	1-216-065-00	s	METAL, CHIP 4.7K 5% 1/10W
R47	1-216-089-00	s	METAL, CHIP 47k 5% 1/10W
R48	1-218-179-11	s	METAL, CHIP 10M 5% 1/10W
R49	1-216-089-00	s	METAL, CHIP 47k 5% 1/10W
R50	1-216-089-00	s	METAL, CHIP 47k 5% 1/10W

(SST-3/3P BOARD)

Ref. No. or Q'ty	Part No.	SP	Description
R51	1-216-089-00	s	METAL, CHIP 47k 5% 1/10W
R52	1-216-113-00	s	METAL, CHIP 470K 5% 1/10W
R53	1-216-089-00	s	METAL, CHIP 47k 5% 1/10W
R54	1-216-089-00	s	METAL, CHIP 47k 5% 1/10W
R55	1-216-073-00	s	METAL, CHIP 10K 5% 1/10W
R56	1-216-089-00	s	METAL, CHIP 47k 5% 1/10W
R57	1-216-073-00	s	METAL, CHIP 10K 5% 1/10W
R58	1-216-079-00	s	METAL, CHIP 18K 5% 1/10W
R59	1-216-073-00	s	METAL, CHIP 10K 5% 1/10W
R60	1-216-081-00	s	METAL, CHIP 22K 5% 1/10W
R61	1-216-089-00	s	METAL, CHIP 47k 5% 1/10W
R69	1-216-073-00	s	METAL, CHIP 10K 5% 1/10W
R70	1-216-089-00	s	METAL, CHIP 47k 5% 1/10W
R71	1-216-073-00	s	METAL, CHIP 10K 5% 1/10W
R72	1-216-061-00	s	METAL, CHIP 3.3K 5% 1/10W
R73	1-208-812-11	s	METAL, CHIP 18K 0.5% 1/10W
R74	1-208-812-11	s	METAL, CHIP 18K 0.5% 1/10W
R75	1-216-049-11	s	METAL, CHIP 1K 5% 1/10W
R76	1-216-662-11	s	METAL, CHIP 3K 0.5% 1/10W
R77	1-208-824-11	s	METAL, CHIP 56K 0.5% 1/10W
R78	1-208-824-11	s	METAL, CHIP 56K 0.5% 1/10W
R81	1-216-073-00	s	METAL, CHIP 10K 5% 1/10W
R82	1-216-073-00	s	METAL, CHIP 10K 5% 1/10W
R83	1-216-089-00	s	METAL, CHIP 47k 5% 1/10W
R84	1-216-073-00	s	METAL, CHIP 10K 5% 1/10W
R85	1-216-073-00	s	METAL, CHIP 10K 5% 1/10W
R86	1-216-057-00	s	METAL, CHIP 2.2K 5% 1/10W
R87	1-216-041-00	s	METAL, CHIP 470 5% 1/10W
R88	1-216-041-00	s	METAL, CHIP 470 5% 1/10W
R89	1-216-057-00	s	METAL, CHIP 2.2K 5% 1/10W
R90	1-216-097-00	s	METAL, CHIP 100K 5% 1/10W
R91	1-208-817-11	s	METAL, CHIP 30K 0.5% 1/10W
R92	1-216-097-00	s	METAL, CHIP 100K 5% 1/10W
R93	1-216-085-00	s	METAL, CHIP 33K 5% 1/10W
R94	1-208-803-11	s	METAL, CHIP 7.5K 0.5% 1/10W
R95	1-216-073-00	s	METAL, CHIP 10K 5% 1/10W
R96	1-216-061-00	s	METAL, CHIP 3.3K 5% 1/10W
R97	1-218-759-11	s	METAL, CHIP 200K 0.5% 1/10W
R98	1-216-684-11	s	METAL, CHIP 24K 0.5% 1/10W
R99	1-216-073-00	s	METAL, CHIP 10K 5% 1/10W
R100	1-216-061-00	s	METAL, CHIP 3.3K 5% 1/10W
R101	1-216-073-00	s	METAL, CHIP 10K 5% 1/10W
R102	1-216-073-00	s	METAL, CHIP 10K 5% 1/10W
R111	1-216-089-00	s	METAL, CHIP 47k 5% 1/10W
R112	1-216-073-00	s	METAL, CHIP 10K 5% 1/10W
R113	1-216-081-00	s	METAL, CHIP 22K 5% 1/10W
R114	1-216-081-00	s	METAL, CHIP 22K 5% 1/10W
R115	1-216-003-11	s	METAL, CHIP 12 5% 1/10W
R116	1-216-003-11	s	METAL, CHIP 12 5% 1/10W
R121	1-216-081-00	s	METAL, CHIP 22K 5% 1/10W
R127	1-216-073-00	s	METAL, CHIP 10K 5% 1/10W
R128	1-216-073-00	s	METAL, CHIP 10K 5% 1/10W [for NTSC]
R129	1-216-073-00	s	METAL, CHIP 10K 5% 1/10W [for PAL]
R130	1-216-089-00	s	METAL, CHIP 47k 5% 1/10W
R131	1-216-133-00	s	METAL, CHIP 3.3M 5% 1/10W
R134	1-216-133-00	s	METAL, CHIP 3.3M 5% 1/10W
R135	1-216-097-00	s	METAL, CHIP 100K 5% 1/10W
R136	1-216-043-00	s	METAL, CHIP 560 5% 1/10W
R137	1-216-073-00	s	METAL, CHIP 10K 5% 1/10W

(SST-3/3P BOARD)

Ref. No. or Q'ty	Part No.	SP	Description
R138	1-216-129-00	s	METAL, CHIP 2.2M 5% 1/10W
R139	1-216-073-00	s	METAL, CHIP 10K 5% 1/10W
R151-158	1-216-065-00	s	METAL, CHIP 4.7K 5% 1/10W
R208	1-216-089-00	s	METAL, CHIP 47k 5% 1/10W
R209	1-216-089-00	s	METAL, CHIP 47k 5% 1/10W
R210	1-216-089-00	s	METAL, CHIP 47k 5% 1/10W
R211	1-216-073-00	s	METAL, CHIP 10K 5% 1/10W
R215	1-216-057-00	s	METAL, CHIP 2.2K 5% 1/10W
R216	1-216-057-00	s	METAL, CHIP 2.2K 5% 1/10W
R217	1-216-097-00	s	METAL, CHIP 100K 5% 1/10W
R218	1-216-097-00	s	METAL, CHIP 100K 5% 1/10W
R219	1-216-097-00	s	METAL, CHIP 100K 5% 1/10W
R220	1-216-089-00	s	METAL, CHIP 47k 5% 1/10W
R221	1-216-037-00	s	METAL, CHIP 330 5% 1/10W
R222	1-216-089-00	s	METAL, CHIP 47k 5% 1/10W
R223	1-247-855-11	s	CARBON 10K 5% 1/4W
R252	1-216-073-00	s	METAL, CHIP 10K 5% 1/10W [for NTSC]
R253	1-216-073-00	s	METAL, CHIP 10K 5% 1/10W [for PAL]
R256	1-216-089-00	s	METAL, CHIP 47k 5% 1/10W
R258	1-216-089-00	s	METAL, CHIP 47k 5% 1/10W
R260	1-216-089-00	s	METAL, CHIP 47k 5% 1/10W
R261	1-216-089-00	s	METAL, CHIP 47k 5% 1/10W
R262	1-216-089-00	s	METAL, CHIP 47k 5% 1/10W
R301	1-216-049-11	s	METAL, CHIP 1K 5% 1/10W
R302	1-216-073-00	s	METAL, CHIP 10K 5% 1/10W
R311	1-216-081-00	s	METAL, CHIP 22K 5% 1/10W
R312	1-216-089-00	s	METAL, CHIP 47k 5% 1/10W
R313	1-216-049-11	s	METAL, CHIP 1K 5% 1/10W
R314	1-216-049-11	s	METAL, CHIP 1K 5% 1/10W
R315	1-216-089-00	s	METAL, CHIP 47k 5% 1/10W
R316	1-216-089-00	s	METAL, CHIP 47k 5% 1/10W
R317	1-216-089-00	s	METAL, CHIP 47k 5% 1/10W
R318	1-216-089-00	s	METAL, CHIP 47k 5% 1/10W
R321	1-216-089-00	s	METAL, CHIP 47k 5% 1/10W
R339	1-216-089-00	s	METAL, CHIP 47k 5% 1/10W
R340	1-216-073-00	s	METAL, CHIP 10K 5% 1/10W
R351	1-216-073-00	s	METAL, CHIP 10K 5% 1/10W
R352	1-216-073-00	s	METAL, CHIP 10K 5% 1/10W
R353	1-216-049-11	s	METAL, CHIP 1K 5% 1/10W
R354	1-216-049-11	s	METAL, CHIP 1K 5% 1/10W
R355	1-216-025-00	s	METAL, CHIP 100 5% 1/10W
R356	1-216-025-00	s	METAL, CHIP 100 5% 1/10W
R357	1-216-025-00	s	METAL, CHIP 100 5% 1/10W
R401	1-216-687-11	s	METAL, CHIP 33K 0.5% 1/10W
R402	1-208-806-11	s	METAL, CHIP 10K 0.5% 1/10W
R407-414	1-216-073-00	s	METAL, CHIP 10K 5% 1/10W
R415	1-216-103-00	s	METAL, CHIP 180k 5% 1/10W
R416	1-216-097-00	s	METAL, CHIP 100K 5% 1/10W
R417	1-216-079-00	s	METAL, CHIP 18K 5% 1/10W
R418	1-216-089-00	s	METAL, CHIP 47k 5% 1/10W
R419	1-216-065-00	s	METAL, CHIP 4.7K 5% 1/10W
R420	1-216-073-00	s	METAL, CHIP 10K 5% 1/10W
R421	1-216-079-00	s	METAL, CHIP 18K 5% 1/10W
R423	1-216-103-00	s	METAL, CHIP 180k 5% 1/10W
R425	1-216-049-11	s	METAL, CHIP 1K 5% 1/10W
R426	1-216-089-00	s	METAL, CHIP 47k 5% 1/10W
R427	1-216-065-00	s	METAL, CHIP 4.7K 5% 1/10W
R428	1-216-073-00	s	METAL, CHIP 10K 5% 1/10W
R429	1-216-073-00	s	METAL, CHIP 10K 5% 1/10W

(SST-3/3P BOARD)

Ref. No. or Q'ty	Part No.	SP	Description
R436	1-216-049-11	s	METAL, CHIP 1K 5% 1/10W
R437	1-216-682-11	s	METAL, CHIP 20K 0.5% 1/10W
R438	1-208-806-11	s	METAL, CHIP 10K 0.5% 1/10W
R439	1-216-065-00	s	METAL, CHIP 4.7K 5% 1/10W
R440	1-216-065-00	s	METAL, CHIP 4.7K 5% 1/10W
R441	1-216-097-00	s	METAL, CHIP 100K 5% 1/10W
R442	1-208-822-11	s	METAL, CHIP 47K 0.5% 1/10W
R443	1-208-822-11	s	METAL, CHIP 47K 0.5% 1/10W
R444	1-216-097-00	s	METAL, CHIP 100K 5% 1/10W
R445	1-216-089-00	s	METAL, CHIP 47k 5% 1/10W
R446	1-216-089-00	s	METAL, CHIP 47k 5% 1/10W
R463	1-216-073-00	s	METAL, CHIP 10K 5% 1/10W
R464-470	1-216-089-00	s	METAL, CHIP 47k 5% 1/10W
R471	1-216-065-00	s	METAL, CHIP 4.7K 5% 1/10W
R472	1-216-065-00	s	METAL, CHIP 4.7K 5% 1/10W
R473	1-216-065-00	s	METAL, CHIP 4.7K 5% 1/10W
R474-480	1-216-121-00	s	METAL, CHIP 1M 5% 1/10W
R481-487	1-216-057-00	s	METAL, CHIP 2.2K 5% 1/10W
R488	1-216-025-00	s	METAL, CHIP 100 5% 1/10W
R489	1-216-025-00	s	METAL, CHIP 100 5% 1/10W
R490	1-216-025-00	s	METAL, CHIP 100 5% 1/10W
R491	1-216-025-00	s	METAL, CHIP 100 5% 1/10W
R492	1-216-089-00	s	METAL, CHIP 47k 5% 1/10W
R493	1-216-121-00	s	METAL, CHIP 1M 5% 1/10W
R494	1-247-871-11	s	CARBON 47K 5% 1/4W
R501-506	1-216-089-00	s	METAL, CHIP 47k 5% 1/10W
R508	1-216-061-00	s	METAL, CHIP 3.3K 5% 1/10W
R509	1-216-061-00	s	METAL, CHIP 3.3K 5% 1/10W
R510	1-216-073-00	s	METAL, CHIP 10K 5% 1/10W
R511	1-216-073-00	s	METAL, CHIP 10K 5% 1/10W
R512	1-216-105-00	s	METAL, CHIP 220K 5% 1/10W
R513	1-216-105-00	s	METAL, CHIP 220K 5% 1/10W
R517	1-216-073-00	s	METAL, CHIP 10K 5% 1/10W
R519	1-216-073-00	s	METAL, CHIP 10K 5% 1/10W
R521	1-216-033-00	s	METAL, CHIP 220 5% 1/10W
R522	1-216-073-00	s	METAL, CHIP 10K 5% 1/10W
R523	1-216-073-00	s	METAL, CHIP 10K 5% 1/10W
R526	1-216-073-00	s	METAL, CHIP 10K 5% 1/10W
R527	1-216-073-00	s	METAL, CHIP 10K 5% 1/10W
R528	1-216-073-00	s	METAL, CHIP 10K 5% 1/10W
R530	1-216-073-00	s	METAL, CHIP 10K 5% 1/10W
R534	1-216-105-00	s	METAL, CHIP 220K 5% 1/10W
R535	1-216-105-00	s	METAL, CHIP 220K 5% 1/10W
R536	1-216-073-00	s	METAL, CHIP 10K 5% 1/10W
R538	1-216-073-00	s	METAL, CHIP 10K 5% 1/10W
R540	1-216-089-00	s	METAL, CHIP 47k 5% 1/10W
R541	1-216-065-00	s	METAL, CHIP 4.7K 5% 1/10W
R542	1-216-097-00	s	METAL, CHIP 100K 5% 1/10W
R543	1-216-089-00	s	METAL, CHIP 47k 5% 1/10W
R580	1-216-065-00	s	METAL, CHIP 4.7K 5% 1/10W
R581	1-216-073-00	s	METAL, CHIP 10K 5% 1/10W
R582	1-247-847-11	s	CARBON 4.7K 5% 1/4W
R583	1-247-847-11	s	CARBON 4.7K 5% 1/4W
R601	1-218-768-11	s	METAL 470K 0.5% 1/10W
R602	1-218-768-11	s	METAL 470K 0.5% 1/10W
R603	1-216-097-00	s	METAL, CHIP 100K 5% 1/10W
R604	1-216-097-00	s	METAL, CHIP 100K 5% 1/10W
R605	1-218-770-11	s	METAL, CHIP 560K 0.50% 1/10W
R606	1-216-073-00	s	METAL, CHIP 10K 5% 1/10W

(SST-3/3P BOARD)

Ref. No. or Q'ty	Part No.	SP	Description
R607	1-216-073-00	s	METAL, CHIP 10K 5% 1/10W
R608	1-208-822-11	s	METAL, CHIP 47K 0.5% 1/10W
R609	1-216-065-00	s	METAL, CHIP 4.7K 5% 1/10W
R610	1-208-822-11	s	METAL, CHIP 47K 0.5% 1/10W
R611	1-216-698-11	s	METAL, CHIP 91K 0.5% 1/10W
R612	1-216-699-11	s	METAL, CHIP 100K 0.5% 1/10W
R613	1-216-097-00	s	METAL, CHIP 100K 5% 1/10W
R614	1-216-073-00	s	METAL, CHIP 10K 5% 1/10W
R615	1-216-682-11	s	METAL, CHIP 20K 0.5% 1/10W
R616	1-218-756-11	s	METAL, CHIP 150K 0.5% 1/10W
R617	1-216-687-11	s	METAL, CHIP 33K 0.5% 1/10W
R618	1-218-756-11	s	METAL, CHIP 150K 0.5% 1/10W
R619	1-216-697-11	s	METAL, CHIP 82K 0.5% 1/10W
R620	1-218-760-11	s	METAL, CHIP 220K 0.5% 1/10W
R621	1-216-699-11	s	METAL, CHIP 100K 0.5% 1/10W
R622	1-208-822-11	s	METAL, CHIP 47K 0.5% 1/10W
R623	1-216-065-00	s	METAL, CHIP 4.7K 5% 1/10W
R624	1-218-236-11	s	METAL, CHIP 1 10% 1/4W
R625	1-208-822-11	s	METAL, CHIP 47K 0.5% 1/10W
R626	1-218-236-11	s	METAL, CHIP 1 10% 1/4W
R627	1-216-699-11	s	METAL, CHIP 100K 0.5% 1/10W
R628	1-218-760-11	s	METAL, CHIP 220K 0.5% 1/10W
R629	1-218-236-11	s	METAL, CHIP 1 10% 1/4W
R630	1-216-687-11	s	METAL, CHIP 33K 0.5% 1/10W
R631	1-216-049-11	s	METAL, CHIP 1K 5% 1/10W
R632	1-216-057-00	s	METAL, CHIP 2.2K 5% 1/10W
R633	1-216-697-11	s	METAL, CHIP 82K 0.5% 1/10W
R634	1-216-057-00	s	METAL, CHIP 2.2K 5% 1/10W
R635	1-218-236-11	s	METAL, CHIP 1 10% 1/4W
R636	1-218-236-11	s	METAL, CHIP 1 10% 1/4W
R637	1-216-065-00	s	METAL, CHIP 4.7K 5% 1/10W
R638	1-218-236-11	s	METAL, CHIP 1 10% 1/4W
R639	1-208-806-11	s	METAL, CHIP 10K 0.5% 1/10W
R640	1-216-699-11	s	METAL, CHIP 100K 0.5% 1/10W
R641	1-216-049-11	s	METAL, CHIP 1K 5% 1/10W
R642	1-216-057-00	s	METAL, CHIP 2.2K 5% 1/10W
R643	1-216-067-00	s	METAL, CHIP 5.6K 5% 1/10W
R644	1-216-097-00	s	METAL, CHIP 100K 5% 1/10W
R645	1-216-057-00	s	METAL, CHIP 2.2K 5% 1/10W
R646	1-216-057-00	s	METAL, CHIP 2.2K 5% 1/10W
R647	1-216-081-00	s	METAL, CHIP 22K 5% 1/10W
R648	1-218-236-11	s	METAL, CHIP 1 10% 1/4W
R649	1-218-236-11	s	METAL, CHIP 1 10% 1/4W
R650	1-218-236-11	s	METAL, CHIP 1 10% 1/4W
R651	1-216-097-00	s	METAL, CHIP 100K 5% 1/10W
R652	1-216-097-00	s	METAL, CHIP 100K 5% 1/10W
R653	1-216-073-00	s	METAL, CHIP 10K 5% 1/10W
R654	1-216-073-00	s	METAL, CHIP 10K 5% 1/10W
R655	1-208-822-11	s	METAL, CHIP 47K 0.5% 1/10W
R656	1-208-822-11	s	METAL, CHIP 47K 0.5% 1/10W
R657	1-208-822-11	s	METAL, CHIP 47K 0.5% 1/10W
R658	1-208-822-11	s	METAL, CHIP 47K 0.5% 1/10W
R659	1-216-695-11	s	METAL, CHIP 68K 0.5% 1/10W
R660	1-216-695-11	s	METAL, CHIP 68K 0.5% 1/10W
R661	1-216-049-11	s	METAL, CHIP 1K 5% 1/10W
R662	1-216-081-00	s	METAL, CHIP 22K 5% 1/10W
R663	1-216-073-00	s	METAL, CHIP 10K 5% 1/10W
R664	1-216-049-11	s	METAL, CHIP 1K 5% 1/10W
R665	1-216-049-11	s	METAL, CHIP 1K 5% 1/10W

(SST-3/3P BOARD)

Ref. No. or Q'ty	Part No.	SP	Description
R666	1-216-049-11	s	METAL, CHIP 1K 5% 1/10W
R667	1-216-121-00	s	METAL, CHIP 1M 5% 1/10W
R668	1-216-081-00	s	METAL, CHIP 22K 5% 1/10W
R669	1-216-073-00	s	METAL, CHIP 10K 5% 1/10W
R670	1-216-121-00	s	METAL, CHIP 1M 5% 1/10W
R671	1-216-089-00	s	METAL, CHIP 47k 5% 1/10W
R672	1-216-089-00	s	METAL, CHIP 47k 5% 1/10W
R673	1-216-057-00	s	METAL, CHIP 2.2K 5% 1/10W
R674	1-216-057-00	s	METAL, CHIP 2.2K 5% 1/10W
R675	1-216-057-00	s	METAL, CHIP 2.2K 5% 1/10W
R676	1-216-057-00	s	METAL, CHIP 2.2K 5% 1/10W
R677-683	1-216-089-00	s	METAL, CHIP 47k 5% 1/10W
R684	1-216-097-00	s	METAL, CHIP 100K 5% 1/10W
R685	1-216-089-00	s	METAL, CHIP 47k 5% 1/10W
R686	1-216-089-00	s	METAL, CHIP 47k 5% 1/10W
R687	1-216-089-00	s	METAL, CHIP 47k 5% 1/10W
R688	1-216-097-00	s	METAL, CHIP 100K 5% 1/10W
R689	1-216-049-11	s	METAL, CHIP 1K 5% 1/10W
R690	1-216-049-11	s	METAL, CHIP 1K 5% 1/10W
R691	1-218-760-11	s	METAL, CHIP 220K 0.5% 1/10W
R692	1-218-760-11	s	METAL, CHIP 220K 0.5% 1/10W
R693	1-216-073-00	s	METAL, CHIP 10K 5% 1/10W
R694	1-216-073-00	s	METAL, CHIP 10K 5% 1/10W
R695	1-216-049-11	s	METAL, CHIP 1K 5% 1/10W
R696	1-216-097-00	s	METAL, CHIP 100K 5% 1/10W
R697	1-216-097-00	s	METAL, CHIP 100K 5% 1/10W
R698	1-216-049-11	s	METAL, CHIP 1K 5% 1/10W
R699	1-218-760-11	s	METAL, CHIP 220K 0.5% 1/10W
R700	1-218-760-11	s	METAL, CHIP 220K 0.5% 1/10W
R701	1-208-814-11	s	METAL, CHIP 22K 0.5% 1/10W
R702	1-208-814-11	s	METAL, CHIP 22K 0.5% 1/10W
R703	1-208-814-11	s	METAL, CHIP 22K 0.5% 1/10W
R704	1-208-814-11	s	METAL, CHIP 22K 0.5% 1/10W
R705-710	1-218-236-11	s	METAL, CHIP 1 10% 1/4W
R711	1-216-097-00	s	METAL, CHIP 100K 5% 1/10W
R712	1-216-097-00	s	METAL, CHIP 100K 5% 1/10W
R713	1-216-049-11	s	METAL, CHIP 1K 5% 1/10W
R714	1-216-073-00	s	METAL, CHIP 10K 5% 1/10W
R715	1-216-049-11	s	METAL, CHIP 1K 5% 1/10W
R716	1-216-073-00	s	METAL, CHIP 10K 5% 1/10W
R717	1-208-814-11	s	METAL, CHIP 22K 0.5% 1/10W
R718	1-208-806-11	s	METAL, CHIP 10K 0.5% 1/10W
R719	1-216-097-00	s	METAL, CHIP 100K 5% 1/10W
R720	1-216-097-00	s	METAL, CHIP 100K 5% 1/10W
R721	1-216-089-00	s	METAL, CHIP 47k 5% 1/10W
R722	1-216-089-00	s	METAL, CHIP 47k 5% 1/10W
R723	1-216-089-00	s	METAL, CHIP 47k 5% 1/10W
R724	1-216-089-00	s	METAL, CHIP 47k 5% 1/10W
R725	1-216-085-00	s	METAL, CHIP 33K 5% 1/10W
R726	1-216-073-00	s	METAL, CHIP 10K 5% 1/10W
R727	1-216-085-00	s	METAL, CHIP 33K 5% 1/10W
R728	1-216-073-00	s	METAL, CHIP 10K 5% 1/10W
R729	1-247-855-11	s	CARBON 10K 5% 1/4W
R801	1-216-295-00	s	RES, CHIP 0
R802	1-208-806-11	s	METAL, CHIP 10K 0.5% 1/10W
R803	1-216-085-00	s	METAL, CHIP 33K 5% 1/10W
R804	1-216-624-11	s	METAL, CHIP 75 0.5% 1/10W
R805	1-216-097-00	s	METAL, CHIP 100K 5% 1/10W
R806	1-216-097-00	s	METAL, CHIP 100K 5% 1/10W

(SST-3/3P BOARD)

Ref. No. or Q'ty	Part No.	SP	Description
R807	1-216-089-00	s	METAL, CHIP 47k 5% 1/10W
R808	1-216-105-00	s	METAL, CHIP 220K 5% 1/10W
R809	1-216-655-11	s	METAL, CHIP 1.5K 0.5% 1/10W
R810	1-216-089-00	s	METAL, CHIP 47k 5% 1/10W
R811	1-216-663-11	s	METAL, CHIP 3.3K 0.5% 1/10W
R812	1-216-121-00	s	METAL, CHIP 1M 5% 1/10W
R813	1-208-799-11	s	METAL, CHIP 5.1K 0.5% 1/10W
R814	1-216-097-00	s	METAL, CHIP 100K 5% 1/10W
R815	1-216-295-00	s	RES, CHIP 0
R816	1-216-295-00	s	RES, CHIP 0
R817	1-216-081-00	s	METAL, CHIP 22K 5% 1/10W
R818	1-216-121-00	s	METAL, CHIP 1M 5% 1/10W
R819	1-216-121-00	s	METAL, CHIP 1M 5% 1/10W
R851	1-216-295-00	s	RES, CHIP 0
R852	1-216-073-00	s	METAL, CHIP 10K 5% 1/10W
R853	1-216-295-00	s	RES, CHIP 0
R854	1-216-667-11	s	METAL, CHIP 4.7K 0.5% 1/10W
R855	1-216-667-11	s	METAL, CHIP 4.7K 0.5% 1/10W
R856	1-216-699-11	s	METAL, CHIP 100K 0.5% 1/10W
R857	1-216-699-11	s	METAL, CHIP 100K 0.5% 1/10W
R858	1-216-113-00	s	METAL, CHIP 470K 5% 1/10W
R859	1-216-655-11	s	METAL, CHIP 1.5K 0.5% 1/10W
R860	1-216-603-11	s	METAL, CHIP 10 0.5% 1/10W
R861	1-208-774-11	s	METAL, CHIP 470 0.5% 1/10W
R862	1-216-655-11	s	METAL, CHIP 1.5K 0.5% 1/10W
R863	1-218-756-11	s	METAL, CHIP 150K 0.5% 1/10W
R864	1-216-699-11	s	METAL, CHIP 100K 0.5% 1/10W
R865	1-216-651-11	s	METAL, CHIP 1K 0.5% 1/10W
R866	1-216-651-11	s	METAL, CHIP 1K 0.5% 1/10W
R867	1-216-663-11	s	METAL, CHIP 3.3K 0.5% 1/10W
R868	1-208-806-11	s	METAL, CHIP 10K 0.5% 1/10W
R869	1-216-699-11	s	METAL, CHIP 100K 0.5% 1/10W
R870	1-216-685-11	s	METAL, CHIP 27K 0.5% 1/10W
R871	1-216-121-00	s	METAL, CHIP 1M 5% 1/10W
R872	1-216-667-11	s	METAL, CHIP 4.7K 0.5% 1/10W
R873	1-216-667-11	s	METAL, CHIP 4.7K 0.5% 1/10W
R874	1-216-651-11	s	METAL, CHIP 1K 0.5% 1/10W
R901	1-216-295-00	s	RES, CHIP 0
R902	1-216-295-00	s	RES, CHIP 0
R903	1-216-295-00	s	RES, CHIP 0
R904	1-216-101-00	s	METAL, CHIP 150K 5% 1/10W
R905	1-216-667-11	s	METAL, CHIP 4.7K 0.5% 1/10W
R906	1-216-667-11	s	METAL, CHIP 4.7K 0.5% 1/10W
R907	1-216-101-00	s	METAL, CHIP 150K 5% 1/10W
R908	1-216-113-00	s	METAL, CHIP 470K 5% 1/10W
R909	1-216-657-11	s	METAL, CHIP 1.8K 0.5% 1/10W
R910	1-216-663-11	s	METAL, CHIP 3.3K 0.5% 1/10W
R911	1-216-603-11	s	METAL, CHIP 10 0.5% 1/10W
R912	1-216-655-11	s	METAL, CHIP 1.5K 0.5% 1/10W
R913	1-208-774-11	s	METAL, CHIP 470 0.5% 1/10W
R914	1-218-756-11	s	METAL, CHIP 150K 0.5% 1/10W
R915	1-216-699-11	s	METAL, CHIP 100K 0.5% 1/10W
R916	1-216-651-11	s	METAL, CHIP 1K 0.5% 1/10W
R917	1-216-651-11	s	METAL, CHIP 1K 0.5% 1/10W
R918	1-216-667-11	s	METAL, CHIP 4.7K 0.5% 1/10W
R919	1-208-806-11	s	METAL, CHIP 10K 0.5% 1/10W
R920	1-218-762-11	s	METAL, CHIP 270K 0.5% 1/10W
R921	1-218-762-11	s	METAL, CHIP 270K 0.5% 1/10W
R922	1-208-806-11	s	METAL, CHIP 10K 0.5% 1/10W

(SST-3/3P BOARD)

Ref. No. or Q'ty	Part No.	SP	Description
R923	1-216-121-00	s	METAL, CHIP 1M 5% 1/10W
R924	1-216-667-11	s	METAL, CHIP 4.7K 0.5% 1/10W
R925	1-216-667-11	s	METAL, CHIP 4.7K 0.5% 1/10W
R926	1-216-651-11	s	METAL, CHIP 1K 0.5% 1/10W
R927	1-216-065-00	s	METAL, CHIP 4.7K 5% 1/10W
R941	1-216-295-00	s	RES, CHIP 0
R942	1-208-822-11	s	METAL, CHIP 47K 0.5% 1/10W
R943	1-216-699-11	s	METAL, CHIP 100K 0.5% 1/10W
R944	1-216-111-00	s	METAL, CHIP 390K 5% 1/10W
R945	1-208-814-11	s	METAL, CHIP 22K 0.5% 1/10W
R946	1-208-822-11	s	METAL, CHIP 47K 0.5% 1/10W
R947	1-208-822-11	s	METAL, CHIP 47K 0.5% 1/10W
R948	1-216-298-00	s	METAL 2.2 5% 1/10W
R949	1-216-298-00	s	METAL 2.2 5% 1/10W
R950	1-216-298-00	s	METAL 2.2 5% 1/10W
R951	1-216-298-00	s	METAL 2.2 5% 1/10W
R961	1-216-295-00	s	RES, CHIP 0
R962	1-208-822-11	s	METAL, CHIP 47K 0.5% 1/10W
R963	1-216-699-11	s	METAL, CHIP 100K 0.5% 1/10W
R964	1-216-111-00	s	METAL, CHIP 390K 5% 1/10W
R965	1-208-814-11	s	METAL, CHIP 22K 0.5% 1/10W
R966	1-208-822-11	s	METAL, CHIP 47K 0.5% 1/10W
R967	1-208-822-11	s	METAL, CHIP 47K 0.5% 1/10W
R968	1-216-298-00	s	METAL 2.2 5% 1/10W
R969	1-216-298-00	s	METAL 2.2 5% 1/10W
R970	1-216-295-00	s	RES, CHIP 0
R971	1-216-298-00	s	METAL 2.2 5% 1/10W
R972	1-216-298-00	s	METAL 2.2 5% 1/10W
RB1	1-239-308-11	s	RESISTOR BLOCK, CHIP 47kx8
RB2	1-239-308-11	s	RESISTOR BLOCK, CHIP 47kx8
RB3	1-236-908-11	s	NETWORK RESISTOR (CHIP) 10K
RB4	1-236-908-11	s	NETWORK RESISTOR (CHIP) 10K
RB101	1-239-286-11	s	NETWORK RESISTOR (CHIP) 22K
RB102	1-239-286-11	s	NETWORK RESISTOR (CHIP) 22K
RB151-163	1-239-308-11	s	RESISTOR BLOCK, CHIP 47kx8
RB301-305	1-239-308-11	s	RESISTOR BLOCK, CHIP 47kx8
RB401	1-236-908-11	s	NETWORK RESISTOR (CHIP) 10K
RB402	1-239-430-11	s	NETWORK RESISTOR (CHIP) 4.7K
RB403	1-239-430-11	s	NETWORK RESISTOR (CHIP) 4.7K
RB404	1-239-308-11	s	RESISTOR BLOCK, CHIP 47kx8
RB405	1-239-308-11	s	RESISTOR BLOCK, CHIP 47kx8
RB406	1-239-308-11	s	RESISTOR BLOCK, CHIP 47kx8
RB501	1-236-907-11	s	NETWORK RESISTOR (CHIP) 100K
RB502	1-236-904-11	s	NETWORK RESISTOR (CHIP) 1.0K
RB503	1-239-430-11	s	NETWORK RESISTOR (CHIP) 4.7K
RB504	1-239-430-11	s	NETWORK RESISTOR (CHIP) 4.7K
RB505	1-239-430-11	s	NETWORK RESISTOR (CHIP) 4.7K
RB506	1-236-904-11	s	NETWORK RESISTOR (CHIP) 1.0K
RB508	1-239-430-11	s	NETWORK RESISTOR (CHIP) 4.7K
RB509	1-239-430-11	s	NETWORK RESISTOR (CHIP) 4.7K
RB510	1-239-430-11	s	NETWORK RESISTOR (CHIP) 4.7K
RB511	1-239-430-11	s	NETWORK RESISTOR (CHIP) 4.7K
RB512	1-239-305-11	s	RESISTOR BLOCK, CHIP 4.7kx8
RB513	1-236-907-11	s	NETWORK RESISTOR (CHIP) 100K
RB514	1-239-430-11	s	NETWORK RESISTOR (CHIP) 4.7K

(SST-3/3P BOARD)

Ref. No. or Q'ty	Part No.	SP	Description
RV1	1-237-035-11	s	RES, ADJ METAL 5K
RV2	1-237-035-11	s	RES, ADJ METAL 5K
RV401	1-241-520-11	s	RES, VAR CARBON 10K
RV402	1-237-038-11	s	RES, ADJ METAL 50K
RY961	1-515-716-11	s	RELAY (TQ2-5V)
S1	1-553-856-00	s	SWITCH, TACTILE
S151	1-692-536-11	s	SWITCH, DIP 8-CKT
S501	1-692-032-21	s	SWITCH, PUSH
S502	1-692-032-21	s	SWITCH, PUSH
S503	1-692-881-21	s	SWITCH, SLIDE
X1	1-578-741-11	s	CRYSTAL 31.25 KHz
X2	1-760-488-21	s	CRYSTAL 3.68640000MHz
X111	1-567-160-21	s	RESONATOR, CERAMIC 4.19MHz
X112	1-578-742-11	s	CRYSTAL 31.4685KHz [for NTSC]
	1-578-741-11	s	CRYSTAL 31.25 KHz [for PAL]
X113	1-579-993-21	s	CRYSTAL 13.50MHz
X401	1-579-996-21	s	RESONATOR, CERAMIC 20.00MHz

TR-57 BOARD

Ref. No. or Q'ty	Part No.	SP	Description
1pc	A-6754-272-A	o	MOUNTED CIRCUIT BOARD, TR-57
4pcs	1-564-831-11	o	CONTACT, FEMALE
4pcs	1-569-193-11	o	CONTACT, FEMALE
CN1	1-562-737-11	o	HOUSING, 4P
CN954	1-569-197-41	o	HOUSING, 4P
PD1	8-745-001-07	s	DME DM-230-1

VPR-12/12P BOARD

Ref. No. or Q'ty	Part No.	SP	Description
1pc	A-8276-914-A	o	MOUNTED CIRCUIT BOARD, VPR-12 [for NTSC]
	A-8276-942-A	o	MOUNTED CIRCUIT BOARD, VPR-12P [for PAL]
C1	1-163-033-00	s	CERAMIC 0.022uF 50V
C2	1-163-033-00	s	CERAMIC 0.022uF 50V
C3	1-163-033-00	s	CERAMIC 0.022uF 50V
C4	1-163-033-00	s	CERAMIC 0.022uF 50V
C5	1-163-237-11	s	CERAMIC, CHIP 27PF 5% 50V [for NTSC]
	1-163-243-11	s	CERAMIC, CHIP 47PF 5% 50V [for PAL]
C7	1-127-517-11	s	ALMUN SOLID 150uF 20% 16V
C8	1-127-517-11	s	ALMUN SOLID 150uF 20% 16V
C9	1-163-033-00	s	CERAMIC 0.022uF 50V
C10	1-127-517-11	s	ALMUN SOLID 150uF 20% 16V
C11	1-163-033-00	s	CERAMIC 0.022uF 50V
C12	1-127-517-11	s	ALMUN SOLID 150uF 20% 16V
C13	1-163-121-00	s	CERAMIC, CHIP 150PF 5% 50V [for NTSC]
	1-163-125-00	s	CERAMIC, CHIP 220PF 5% 50V [for PAL]
C14	1-163-033-00	s	CERAMIC 0.022uF 50V
C15	1-163-033-00	s	CERAMIC 0.022uF 50V
C16	1-163-033-00	s	CERAMIC 0.022uF 50V
C17	1-163-033-00	s	CERAMIC 0.022uF 50V
C18	1-164-232-11	s	CERAMIC, CHIP 0.01uF 10% 100V
C19	1-163-249-11	s	CERAMIC, CHIP 82pF 5% 50V [for NTSC]
	1-163-243-11	s	CERAMIC, CHIP 47PF 5% 50V [for PAL]
C20	1-163-237-11	s	CERAMIC, CHIP 27PF 5% 50V [for NTSC]
	1-163-235-11	s	CERAMIC, CHIP 22PF 5% 50V [for PAL]
C21	1-163-237-11	s	CERAMIC, CHIP 27PF 5% 50V [for NTSC]
	1-163-235-11	s	CERAMIC, CHIP 22PF 5% 50V [for PAL]
C22	1-163-253-11	s	CERAMIC, CHIP 120PF 5% 50V [for NTSC]
	1-163-251-11	s	CERAMIC, CHIP 100PF 5% 50V [for PAL]
C23	1-163-133-00	s	CERAMIC, CHIP 470PF 5% 50V
C24	1-163-125-00	s	CERAMIC, CHIP 220PF 5% 50V
C25	1-163-243-11	s	CERAMIC, CHIP 47PF 5% 50V [for NTSC]
	1-163-239-11	s	CERAMIC, CHIP 33PF 5% 50V [for PAL]
C26	1-163-243-11	s	CERAMIC, CHIP 47PF 5% 50V [for NTSC]
	1-163-239-11	s	CERAMIC, CHIP 33PF 5% 50V [for PAL]
C27	1-163-125-00	s	CERAMIC, CHIP 220PF 5% 50V
C28	1-127-517-11	s	ALMUN SOLID 150uF 20% 16V
C29	1-127-517-11	s	ALMUN SOLID 150uF 20% 16V
C30	1-163-237-11	s	CERAMIC, CHIP 27PF 5% 50V [for NTSC]
	1-163-239-11	s	CERAMIC, CHIP 33PF 5% 50V [for PAL]
C31	1-127-517-11	s	ALMUN SOLID 150uF 20% 16V
C32	1-164-232-11	s	CERAMIC, CHIP 0.01uF 10% 100V
C33	1-163-033-00	s	CERAMIC 0.022uF 50V
C34	1-163-033-00	s	CERAMIC 0.022uF 50V
C35	1-163-033-00	s	CERAMIC 0.022uF 50V

(VPR-12/12P BOARD)

Ref. No. or Q'ty	Part No.	SP	Description
C36	1-163-033-00	s	CERAMIC 0.022uF 50V
C38	1-163-033-00	s	CERAMIC 0.022uF 50V
C39	1-163-033-00	s	CERAMIC 0.022uF 50V
C40	1-163-033-00	s	CERAMIC 0.022uF 50V
C41	1-104-559-11	s	FILM, CHIP 0.047uF 5% 16V
C42	1-163-033-00	s	CERAMIC 0.022uF 50V
C43	1-163-033-00	s	CERAMIC 0.022uF 50V
C44	1-163-033-00	s	CERAMIC 0.022uF 50V
C45	1-135-070-00	s	TANTALUM, CHIP 0.1uF 10% 35V
C46	1-135-070-00	s	TANTALUM, CHIP 0.1uF 10% 35V
C47	1-135-070-00	s	TANTALUM, CHIP 0.1uF 10% 35V
C48	1-135-072-21	s	TANTALUM, CHIP 0.22uF 10% 35V
C49	1-135-072-21	s	TANTALUM, CHIP 0.22uF 10% 35V
C50	1-135-072-21	s	TANTALUM, CHIP 0.22uF 10% 35V
C51	1-163-037-11	s	CERAMIC, CHIP 0.022uF 10% 25V
C52	1-163-253-11	s	CERAMIC, CHIP 120PF 5% 50V [for NTSC]
	1-163-121-00	s	CERAMIC, CHIP 150PF 5% 50V [for PAL]
C54	1-163-033-00	s	CERAMIC 0.022uF 50V
C53	1-163-038-00	s	CERAMIC 0.1uF 25V
C55	1-163-033-00	s	CERAMIC 0.022uF 50V
C56	1-163-033-00	s	CERAMIC 0.022uF 50V
C57	1-163-033-00	s	CERAMIC 0.022uF 50V
C58	1-135-216-11	s	TANTALUM, CHIP 10uF 20% 10V
C59	1-163-033-00	s	CERAMIC 0.022uF 50V
C62	1-163-033-00	s	CERAMIC 0.022uF 50V
C63	1-163-033-00	s	CERAMIC 0.022uF 50V
C60	1-135-216-11	s	TANTALUM, CHIP 10uF 20% 10V
C61	1-135-216-11	s	TANTALUM, CHIP 10uF 20% 10V
C64	1-109-894-11	s	ELECT 33uF 20% 10V
C65	1-164-004-11	s	CERAMIC, CHIP 0.1uF 10% 25V
C66	1-163-033-00	s	CERAMIC 0.022uF 50V
C67	1-163-033-00	s	CERAMIC 0.022uF 50V
C68	1-163-251-11	s	CERAMIC, CHIP 100PF 5% 50V
C69	1-163-033-00	s	CERAMIC 0.022uF 50V
C70	1-163-038-00	s	CERAMIC 0.1uF 25V
C71	1-163-251-11	s	CERAMIC, CHIP 100PF 5% 50V
C72	1-164-232-11	s	CERAMIC, CHIP 0.01uF 10% 100V
C73	1-163-243-11	s	CERAMIC, CHIP 47PF 5% 50V
C74	1-164-232-11	s	CERAMIC, CHIP 0.01uF 10% 100V
C75	1-163-243-11	s	CERAMIC, CHIP 47PF 5% 50V
C76	1-163-038-00	s	CERAMIC 0.1uF 25V
C77	1-163-251-11	s	CERAMIC, CHIP 100PF 5% 50V
C78	1-163-038-00	s	CERAMIC 0.1uF 25V
C79	1-163-251-11	s	CERAMIC, CHIP 100PF 5% 50V
C80-85	1-163-038-00	s	CERAMIC 0.1uF 25V
C86-93	1-163-033-00	s	CERAMIC 0.022uF 50V
C95	1-163-033-00	s	CERAMIC 0.022uF 50V
C96	1-163-033-00	s	CERAMIC 0.022uF 50V
C99	1-163-033-00	s	CERAMIC 0.022uF 50V
C94	1-126-394-11	s	ELECT, CHIP 10uF 20% 16V
C97	1-135-160-21	s	TANTALUM 15uF 20% 16V
C98	1-109-894-11	s	ELECT 33uF 20% 10V
C100	1-164-004-11	s	CERAMIC, CHIP 0.1uF 10% 25V
C101	1-163-038-00	s	CERAMIC 0.1uF 25V
C102	1-163-033-00	s	CERAMIC 0.022uF 50V
C103	1-163-033-00	s	CERAMIC 0.022uF 50V
C104	1-163-033-00	s	CERAMIC 0.022uF 50V

(VPR-12/12P BOARD)

Ref. No. or Q'ty	Part No.	SP	Description
C105	1-163-243-11	s	CERAMIC, CHIP 47PF 5% 50V
C106	1-164-004-11	s	CERAMIC, CHIP 0.1uF 10% 25V
C107	1-164-004-11	s	CERAMIC, CHIP 0.1uF 10% 25V
C108	1-163-038-00	s	CERAMIC 0.1uF 25V
C109	1-163-038-00	s	CERAMIC 0.1uF 25V
C110	1-163-033-00	s	CERAMIC 0.022uF 50V
C111	1-163-033-00	s	CERAMIC 0.022uF 50V
C112	1-163-033-00	s	CERAMIC 0.022uF 50V
C113	1-104-608-11	s	ELECT, CHIP 33uF 20% 6.3V
C114	1-104-608-11	s	ELECT, CHIP 33uF 20% 6.3V
C115	1-163-033-00	s	CERAMIC 0.022uF 50V
C116	1-163-033-00	s	CERAMIC 0.022uF 50V
C117	1-163-033-00	s	CERAMIC 0.022uF 50V
C118	1-163-033-00	s	CERAMIC 0.022uF 50V
C119	1-163-038-00	s	CERAMIC 0.1uF 25V
C120	1-163-038-00	s	CERAMIC 0.1uF 25V
C121-125	1-104-608-11	s	ELECT, CHIP 33uF 20% 6.3V
C126	1-163-251-11	s	CERAMIC, CHIP 100PF 5% 50V
C127-131	1-163-038-00	s	CERAMIC 0.1uF 25V
C132	1-163-033-00	s	CERAMIC 0.022uF 50V
C133	1-163-033-00	s	CERAMIC 0.022uF 50V
C134	1-109-894-11	s	ELECT 33uF 20% 10V
C200	1-163-033-00	s	CERAMIC 0.022uF 50V
C201	1-163-033-00	s	CERAMIC 0.022uF 50V
C202	1-163-275-11	s	CERAMIC, CHIP 0.001uF 5% 50V
C203	1-163-033-00	s	CERAMIC 0.022uF 50V
C204	1-163-033-00	s	CERAMIC 0.022uF 50V
C205	1-163-033-00	s	CERAMIC 0.022uF 50V
C206	1-163-033-00	s	CERAMIC 0.022uF 50V
C207	1-127-517-11	s	ALMUN SOLID 150uF 20% 16V
C208	1-127-517-11	s	ALMUN SOLID 150uF 20% 16V
C209	1-164-004-11	s	CERAMIC, CHIP 0.1uF 10% 25V
C210	1-164-004-11	s	CERAMIC, CHIP 0.1uF 10% 25V
C211	1-163-239-11	s	CERAMIC, CHIP 33PF 5% 50V
C213	1-163-251-11	s	CERAMIC, CHIP 100PF 5% 50V
C214	1-127-517-11	s	ALMUN SOLID 150uF 20% 16V
C215	1-163-237-11	s	CERAMIC, CHIP 27PF 5% 50V [for NTSC]
	1-163-241-11	s	CERAMIC, CHIP 39PF 5% 50V [for PAL]
C217	1-163-033-00	s	CERAMIC 0.022uF 50V
C218	1-163-239-11	s	CERAMIC, CHIP 33PF 5% 50V
C219	1-163-125-00	s	CERAMIC, CHIP 220PF 5% 50V
C220-224	1-163-033-00	s	CERAMIC 0.022uF 50V
C225	1-135-070-00	s	TANTALUM, CHIP 0.1uF 10% 35V
C226	1-163-033-00	s	CERAMIC 0.022uF 50V
C227	1-135-072-21	s	TANTALUM, CHIP 0.22uF 10% 35V
C228	1-126-392-11	s	ELECT, CHIP 100uF 20% 6.3V
C229	1-163-033-00	s	CERAMIC 0.022uF 50V
C230	1-163-033-00	s	CERAMIC 0.022uF 50V
C231	1-163-033-00	s	CERAMIC 0.022uF 50V
C232	1-135-216-11	s	TANTALUM, CHIP 10uF 20% 10V
C233	1-163-033-00	s	CERAMIC 0.022uF 50V
C234	1-163-033-00	s	CERAMIC 0.022uF 50V
C235	1-163-033-00	s	CERAMIC 0.022uF 50V
C236	1-163-033-00	s	CERAMIC 0.022uF 50V
C237	1-126-392-11	s	ELECT, CHIP 100uF 20% 6.3V
C238	1-126-392-11	s	ELECT, CHIP 100uF 20% 6.3V
C239	1-163-033-00	s	CERAMIC 0.022uF 50V
C240	1-163-033-00	s	CERAMIC 0.022uF 50V

(VPR-12/12P BOARD)

Ref. No. or Q'ty	Part No.	SP	Description
C241	1-163-239-11	s	CERAMIC, CHIP 33PF 5% 50V
C242	1-163-125-00	s	CERAMIC, CHIP 220PF 5% 50V
C243	1-164-232-11	s	CERAMIC, CHIP 0.01uF 10% 100V
C244	1-164-004-11	s	CERAMIC, CHIP 0.1uF 10% 25V
C245	1-163-275-11	s	CERAMIC, CHIP 0.001uF 5% 50V
C246	1-163-033-00	s	CERAMIC 0.022uF 50V
C247	1-163-133-00	s	CERAMIC, CHIP 470PF 5% 50V
C248	1-163-275-11	s	CERAMIC, CHIP 0.001uF 5% 50V
C250	1-163-275-11	s	CERAMIC, CHIP 0.001uF 5% 50V
C251	1-163-133-00	s	CERAMIC, CHIP 470PF 5% 50V
C252	1-163-033-00	s	CERAMIC 0.022uF 50V
C253	1-163-263-11	s	CERAMIC, CHIP 330PF 5% 50V
C254	1-163-275-11	s	CERAMIC, CHIP 0.001uF 5% 50V
C255	1-163-125-00	s	CERAMIC, CHIP 220PF 5% 50V
C256	1-163-125-00	s	CERAMIC, CHIP 220PF 5% 50V
C257	1-164-004-11	s	CERAMIC, CHIP 0.1uF 10% 25V
C258	1-164-004-11	s	CERAMIC, CHIP 0.1uF 10% 25V
C259	1-163-033-00	s	CERAMIC 0.022uF 50V
C260	1-163-033-00	s	CERAMIC 0.022uF 50V
C261	1-163-033-00	s	CERAMIC 0.022uF 50V
C262	1-164-232-11	s	CERAMIC, CHIP 0.01uF 10% 100V
C263	1-163-033-00	s	CERAMIC 0.022uF 50V
C264	1-163-033-00	s	CERAMIC 0.022uF 50V
C265	1-164-004-11	s	CERAMIC, CHIP 0.1uF 10% 25V
C266	1-163-033-00	s	CERAMIC 0.022uF 50V
C267	1-163-033-00	s	CERAMIC 0.022uF 50V
C268	1-163-275-11	s	CERAMIC, CHIP 0.001uF 5% 50V
C269	1-163-033-00	s	CERAMIC 0.022uF 50V
C270	1-126-392-11	s	ELECT, CHIP 100uF 20% 6.3V
C272	1-163-037-11	s	CERAMIC, CHIP 0.022uF 10% 25V
C273	1-163-033-00	s	CERAMIC 0.022uF 50V
C274	1-163-033-00	s	CERAMIC 0.022uF 50V
C275	1-163-033-00	s	CERAMIC 0.022uF 50V
C276	1-126-392-11	s	ELECT, CHIP 100uF 20% 6.3V
C277	1-163-033-00	s	CERAMIC 0.022uF 50V
C278	1-109-894-11	s	ELECT 33uF 20% 10V
C279	1-164-004-11	s	CERAMIC, CHIP 0.1uF 10% 25V
C280	1-163-275-11	s	CERAMIC, CHIP 0.001uF 5% 50V
C281	1-163-033-00	s	CERAMIC 0.022uF 50V
C282	1-163-033-00	s	CERAMIC 0.022uF 50V
C283	1-163-033-00	s	CERAMIC 0.022uF 50V
C284	1-163-038-00	s	CERAMIC 0.1uF 25V
C285	1-163-038-00	s	CERAMIC 0.1uF 25V
C286	1-163-038-00	s	CERAMIC 0.1uF 25V
C287	1-164-232-11	s	CERAMIC, CHIP 0.01uF 10% 100V
C288	1-126-392-11	s	ELECT, CHIP 100uF 20% 6.3V
C289	1-163-033-00	s	CERAMIC 0.022uF 50V
C290	1-163-038-00	s	CERAMIC 0.1uF 25V
C291	1-126-392-11	s	ELECT, CHIP 100uF 20% 6.3V
C292	1-163-033-00	s	CERAMIC 0.022uF 50V
C293	1-162-718-11	s	CERAMIC 220PF 1% 50V [for NTSC]
	1-162-714-11	s	CERAMIC 150PF 1% 50V [for PAL]
C294	1-164-232-11	s	CERAMIC, CHIP 0.01uF 10% 100V
C295	1-163-033-00	s	CERAMIC 0.022uF 50V
C296	1-163-033-00	s	CERAMIC 0.022uF 50V
C297	1-164-004-11	s	CERAMIC, CHIP 0.1uF 10% 25V
C298	1-163-033-00	s	CERAMIC 0.022uF 50V

(VPR-12/12P BOARD)

Ref. No. or Q'ty	Part No.	SP	Description
C299	1-163-033-00	s	CERAMIC 0.022uF 50V
C300	1-163-033-00	s	CERAMIC 0.022uF 50V
C301	1-163-227-11	s	CERAMIC, CHIP 10PF 5% 50V
C302	1-164-004-11	s	CERAMIC, CHIP 0.1uF 10% 25V
C303	1-163-033-00	s	CERAMIC 0.022uF 50V
C304	1-163-033-00	s	CERAMIC 0.022uF 50V
C305	1-163-033-00	s	CERAMIC 0.022uF 50V
C306	1-126-392-11	s	ELECT, CHIP 100uF 20% 6.3V
C307-311	1-163-033-00	s	CERAMIC 0.022uF 50V
C312	1-164-004-11	s	CERAMIC, CHIP 0.1uF 10% 25V
C313	1-163-033-00	s	CERAMIC 0.022uF 50V
C314	1-164-004-11	s	CERAMIC, CHIP 0.1uF 10% 25V
C315	1-163-033-00	s	CERAMIC 0.022uF 50V
C317	1-163-033-00	s	CERAMIC 0.022uF 50V
C318	1-126-392-11	s	ELECT, CHIP 100uF 20% 6.3V
C319	1-163-033-00	s	CERAMIC 0.022uF 50V
C320	1-126-392-11	s	ELECT, CHIP 100uF 20% 6.3V
C321	1-163-033-00	s	CERAMIC 0.022uF 50V
C322	1-163-033-00	s	CERAMIC 0.022uF 50V
C323	1-164-232-11	s	CERAMIC, CHIP 0.01uF 10% 100V
C324	1-126-392-11	s	ELECT, CHIP 100uF 20% 6.3V
C325	1-163-033-00	s	CERAMIC 0.022uF 50V
C326	1-163-033-00	s	CERAMIC 0.022uF 50V
C327	1-164-004-11	s	CERAMIC, CHIP 0.1uF 10% 25V
C328	1-163-033-00	s	CERAMIC 0.022uF 50V
C329	1-163-033-00	s	CERAMIC 0.022uF 50V
C330	1-126-392-11	s	ELECT, CHIP 100uF 20% 6.3V
C331-340	1-163-033-00	s	CERAMIC 0.022uF 50V
C341	1-126-394-11	s	ELECT, CHIP 10uF 20% 16V
C342	1-104-608-11	s	ELECT, CHIP 33uF 20% 6.3V
C343	1-104-608-11	s	ELECT, CHIP 33uF 20% 6.3V
C344	1-104-608-11	s	ELECT, CHIP 33uF 20% 6.3V
C345	1-107-686-11	s	TANTALUM, CHIP 4.7uF 20% 16V
C347	1-163-251-11	s	CERAMIC, CHIP 100PF 5% 50V
C348	1-163-038-00	s	CERAMIC 0.1uF 25V
C349	1-163-038-00	s	CERAMIC 0.1uF 25V
C350	1-109-894-11	s	ELECT 33uF 20% 10V
C360	1-162-710-11	s	CERAMIC 100PF 1% 50V
C500	1-127-516-11	s	ALUMN SOLID 220uF 20% 10V
C501	1-126-392-11	s	ELECT, CHIP 100uF 20% 6.3V
C502-506	1-163-033-00	s	CERAMIC 0.022uF 50V
C507	1-163-038-00	s	CERAMIC 0.1uF 25V
C508	1-135-070-00	s	TANTALUM, CHIP 0.1uF 10% 35V
C509-513	1-163-033-00	s	CERAMIC 0.022uF 50V
C514	1-135-157-21	s	TANTALUM, CHIP 10uF 10% 6.3V
C515	1-163-033-00	s	CERAMIC 0.022uF 50V
C516	1-163-033-00	s	CERAMIC 0.022uF 50V
C517	1-163-275-11	s	CERAMIC, CHIP 0.001uF 5% 50V
C518	1-163-275-11	s	CERAMIC, CHIP 0.001uF 5% 50V
C519	1-163-251-11	s	CERAMIC, CHIP 100PF 5% 50V
C520	1-163-092-00	s	CERAMIC 9PF 0.25PF 50V [for NTSC]
	1-163-089-00	s	CERAMIC, CHIP 6PF 50V [for PAL]
C521	1-104-541-11	s	FILM, CHIP 0.0015uF 5% 50V [for NTSC]
	1-164-695-11	s	CERAMIC 2200PF 5% 50V [for PAL]
C522	1-163-257-11	s	CERAMIC, CHIP 180PF 5% 50V
C523	1-163-220-11	s	CERAMIC, CHIP 3PF 50V

(VPR-12/12P BOARD)

Ref. No. or Q'ty	Part No.	SP	Description
C524	1-163-251-11	s	CERAMIC, CHIP 100PF 5% 50V
C525	1-135-210-11	s	TANTALUM, CHIP 4.7uF 20% 10V
C526	1-135-210-11	s	TANTALUM, CHIP 4.7uF 20% 10V
C527	1-135-091-00	s	TANTALUM, CHIP 1uF 20% 16V
C528-532	1-163-033-00	s	CERAMIC 0.022uF 50V
C534	1-126-392-11	s	ELECT, CHIP 100uF 20% 6.3V
C535	1-163-251-11	s	CERAMIC, CHIP 100PF 5% 50V
C536	1-126-392-11	s	ELECT, CHIP 100uF 20% 6.3V
C537	1-126-392-11	s	ELECT, CHIP 100uF 20% 6.3V
C538	1-126-394-11	s	ELECT, CHIP 10uF 20% 16V
C539	1-163-033-00	s	CERAMIC 0.022uF 50V
C540	1-126-392-11	s	ELECT, CHIP 100uF 20% 6.3V
C541	1-163-033-00	s	CERAMIC 0.022uF 50V
C542	1-163-033-00	s	CERAMIC 0.022uF 50V
C700-704	1-163-033-00	s	CERAMIC 0.022uF 50V
C705	1-126-392-11	s	ELECT, CHIP 100uF 20% 6.3V
C706	1-126-392-11	s	ELECT, CHIP 100uF 20% 6.3V
C707	1-126-392-11	s	ELECT, CHIP 100uF 20% 6.3V
C708	1-126-396-11	s	ELECT, CHIP 47uF 20% 16V
C709	1-126-392-11	s	ELECT, CHIP 100uF 20% 6.3V
C710-714	1-163-033-00	s	CERAMIC 0.022uF 50V
C715	1-126-392-11	s	ELECT, CHIP 100uF 20% 6.3V
C716	1-126-392-11	s	ELECT, CHIP 100uF 20% 6.3V
C717	1-126-392-11	s	ELECT, CHIP 100uF 20% 6.3V
C718	1-126-396-11	s	ELECT, CHIP 47uF 20% 16V
C719	1-126-392-11	s	ELECT, CHIP 100uF 20% 6.3V
C720-724	1-163-033-00	s	CERAMIC 0.022uF 50V
C725	1-126-392-11	s	ELECT, CHIP 100uF 20% 6.3V
C726	1-126-392-11	s	ELECT, CHIP 100uF 20% 6.3V
C727	1-126-392-11	s	ELECT, CHIP 100uF 20% 6.3V
C728	1-126-396-11	s	ELECT, CHIP 47uF 20% 16V
C729	1-126-392-11	s	ELECT, CHIP 100uF 20% 6.3V
C730	1-163-033-00	s	CERAMIC 0.022uF 50V
C731	1-163-033-00	s	CERAMIC 0.022uF 50V
C732	1-126-392-11	s	ELECT, CHIP 100uF 20% 6.3V
C733	1-126-392-11	s	ELECT, CHIP 100uF 20% 6.3V
C740	1-124-234-00	s	ELECT 22uF 20% 16V
CN201	1-774-265-11	s	CONNECTOR, BOARD TO BOARD 30P
CN202	1-774-265-11	s	CONNECTOR, BOARD TO BOARD 30P
CN203	1-774-264-11	s	CONNECTOR, BOARD TO BOARD 26P
CN204	1-774-262-11	s	CONNECTOR, BOARD TO BOARD 18P
CN209	1-566-767-11	o	CONNECTOR 12P, MALE
CN210	1-566-763-11	o	CONNECTOR 8P, MAEL
CP200	1-760-277-11	s	VCO, CRYSTAL 28.63636000MHz [for NTSC]
	1-760-263-11	s	VCO, CRYSTAL 35.46895000MHz [for PAL]
D1	8-719-157-11	s	DIODE RD3.3M-B
D2	8-719-157-11	s	DIODE RD3.3M-B
D3	8-719-157-11	s	DIODE RD3.3M-B
D4	8-719-941-23	s	DIODE DA204U
D5	8-719-941-23	s	DIODE DA204U
D10	8-719-105-28	s	DIODE RD2.4M-B
D200	8-719-023-69	s	DIODE SB007T03Q
D201	8-719-023-69	s	DIODE SB007T03Q
D202	8-719-023-69	s	DIODE SB007T03Q
D203	8-719-157-11	s	DIODE RD3.3M-B

(VPR-12/12P BOARD)

Ref. No. or Q'ty	Part No.	SP	Description
D204	8-719-123-82	s	DIODE 1SS303-T1
D205	8-719-023-69	s	DIODE SB007T03Q [for PAL]
D206	8-719-123-82	s	DIODE 1SS303-T1
D207	8-719-941-23	s	DIODE DA204U
D208	8-719-123-82	s	DIODE 1SS303-T1 [for PAL]
D500	8-719-023-69	s	DIODE SB007T03Q
D501	8-719-023-69	s	DIODE SB007T03Q [for PAL]
D700	8-719-157-23	s	DIODE RD4.7M-B
D701	8-719-157-36	s	DIODE RD6.8M-B
D702	8-719-157-23	s	DIODE RD4.7M-B
D703	8-719-157-36	s	DIODE RD6.8M-B
D704	8-719-157-36	s	DIODE RD6.8M-B
FB1	1-543-309-21	s	BEAD, FERRITE
FB2	1-543-309-21	s	BEAD, FERRITE
FB3	1-543-309-21	s	BEAD, FERRITE
FB200	1-543-309-21	s	BEAD, FERRITE
FB201	1-543-309-21	s	BEAD, FERRITE
FB202	1-543-309-21	s	BEAD, FERRITE
FL1	1-233-432-11	s	FILTER, LOW-PASS
FL2	1-233-432-11	s	FILTER, LOW-PASS
FL3	1-233-433-11	s	FILTER, LOW-PASS
FL200	1-239-069-11	s	FILTER, LOW-PASS
FL500	1-239-931-11	s	FILTER, LOW-PASS
IC1	8-759-987-27	s	IC LM1881M
IC2	8-759-185-90	s	IC TC74VHC221AF(EL)
IC3	8-759-030-16	s	IC MC34182M
IC4	8-759-054-61	s	IC CLC505AJE
IC5	8-759-014-29	s	IC MC34184M
IC6	8-759-014-29	s	IC MC34184M
IC7	8-759-014-29	s	IC MC34184M
IC8	8-759-234-77	s	IC TC4S66F
IC9	8-759-234-77	s	IC TC4S66F
IC10	8-759-234-77	s	IC TC4S66F
IC11	8-759-702-08	s	IC NJM360M
IC12	8-759-702-08	s	IC NJM360M
IC13	8-759-186-56	s	IC TC74VHC174F
IC14	8-759-030-61	s	IC TL431CM
IC15	8-759-998-98	s	IC LM358D
IC16	8-759-081-42	s	IC TC74VHC00F
IC17	8-759-030-16	s	IC MC34182M
IC18	8-752-358-04	s	IC CXD2310R
IC19	8-752-358-04	s	IC CXD2310R
IC21	8-759-186-53	s	IC TC74VHC163F
IC22	8-759-147-05	s	IC UPD42101G-3
IC23	8-759-147-05	s	IC UPD42101G-3
IC24	8-759-147-05	s	IC UPD42101G-3
IC25	8-759-031-84	s	IC TC7S04F
IC26	8-759-175-27	s	IC TC74VHC574F
IC27	8-759-175-27	s	IC TC74VHC574F
IC28	8-759-175-27	s	IC TC74VHC574F
IC29	8-759-175-27	s	IC TC74VHC574F
IC30	8-759-940-45	s	IC S-8054HN-CB
IC31	8-759-186-56	s	IC TC74VHC174F
IC32	8-759-186-56	s	IC TC74VHC174F
IC33	8-759-174-16	s	IC TC74VHC244F
IC34	8-759-710-88	s	IC NJM431U
IC36	8-759-030-61	s	IC TL431CM
IC37	8-759-186-60	s	IC TC74VHC240F

(VPR-12/12P BOARD)

Ref. No. or Q'ty	Part No.	SP	Description
IC38	8-759-186-56	s	IC TC74VHC174F
IC40	8-752-358-04	s	IC CXD2310R
IC41	8-752-360-44	s	IC CXK1203AR
IC42	8-759-186-56	s	IC TC74VHC174F
IC43	8-759-186-56	s	IC TC74VHC174F
IC44	8-759-998-98	s	IC LM358D
IC45	8-759-998-98	s	IC LM358D
IC200	8-759-926-49	s	IC SN74HC245NS
IC201	8-759-186-63	s	IC TC74VHC245F
IC202	8-759-926-49	s	IC SN74HC245NS
IC203	8-759-097-51	s	IC MSM6524GS-VKR2
IC204	8-759-234-20	s	IC TC7S08F
IC205	8-759-031-84	s	IC TC7S04F
IC206	8-759-054-61	s	IC CLC505AJE
IC207	8-759-014-29	s	IC MC34184M
IC208	8-759-234-77	s	IC TC4S66F
IC209	8-759-030-16	s	IC MC34182M
IC210	8-759-030-16	s	IC MC34182M
IC211	8-759-987-27	s	IC LM1881M
IC212	8-759-185-90	s	IC TC74VHC221AF(EL)
IC213	8-759-185-90	s	IC TC74VHC221AF(EL)
IC214	8-759-186-39	s	IC TC74VHC74F
IC215	8-759-186-43	s	IC TC74VHC123AF
IC216	8-759-035-93	s	IC TC7S32F-TE85L
IC217	8-759-185-90	s	IC TC74VHC221AF(EL)
IC218	8-759-300-71	s	IC HD14053BFP
IC219	8-759-030-16	s	IC MC34182M
IC220	8-759-054-61	s	IC CLC505AJE
IC221	8-752-052-77	s	IC CXA1450M
IC222	8-759-185-90	s	IC TC74VHC221AF(EL)
IC223	8-759-098-16	s	IC LT1227CS8-E2
IC224	8-759-702-08	s	IC NJM360M
IC225	8-759-186-53	s	IC TC74VHC163F
IC226	8-759-186-43	s	IC TC74VHC123AF
IC227	8-759-030-61	s	IC TL431CM
IC228	8-759-242-64	s	IC TC4W53F
IC229	8-759-998-98	s	IC LM358D
IC230	8-759-186-53	s	IC TC74VHC163F
IC231	8-759-233-66	s	IC TC74HCT04AF
IC232	8-752-358-04	s	IC CXD2310R
IC233	8-759-030-16	s	IC MC34182M
IC234	8-752-360-44	s	IC CXK1203AR
IC235	8-759-702-08	s	IC NJM360M
IC236	8-759-035-93	s	IC TC7S32F-TE85L
IC237	8-759-186-39	s	IC TC74VHC74F
IC238	8-752-375-22	s	IC CXD304-106Q
IC239	8-759-081-42	s	IC TC74VHC00F
IC240	8-759-175-92	s	IC CXD8819AQ
IC241	8-759-014-29	s	IC MC34184M
IC242	8-752-334-55	s	IC CXD1175M
IC243	8-759-196-97	s	IC TC7SH32FU-TE85R
IC244	8-759-186-63	s	IC TC74VHC245F
IC245	8-759-030-16	s	IC MC34182M
IC246	8-759-186-63	s	IC TC74VHC245F
IC247	8-759-186-63	s	IC TC74VHC245F
IC248	8-759-101-12	s	IC UPC311G2
IC249	8-759-940-45	s	IC S-8054HN-CB
IC500	8-759-030-61	s	IC TL431CM
IC501	8-759-186-63	s	IC TC74VHC245F

(VPR-12/12P BOARD)

Ref. No. or Q'ty	Part No.	SP	Description
IC502	8-759-186-63	s	IC TC74VHC245F
IC503	8-759-030-16	s	IC MC34182M
IC504	8-752-356-44	s	IC CXD2306Q
IC505	8-759-185-90	s	IC TC74VHC221AF(EL)
IC506	8-759-054-61	s	IC CLC505AJE
IC507	8-759-054-61	s	IC CLC505AJE
IC508	8-759-030-16	s	IC MC34182M
IC509	8-759-242-64	s	IC TC4W53F
IC510	8-752-052-73	s	IC CXA1451M
IC511	8-752-052-73	s	IC CXA1451M
IC700	8-759-081-42	s	IC TC74VHC00F
IC701	8-759-045-17	s	IC NJM79L05UA
IC702	8-759-384-71	s	IC TL750L08CLP
L2	1-412-192-11	s	INDUCTOR 56uH [for NTSC]
	1-412-194-11	s	INDUCTOR 82uH [for PAL]
L200	1-410-393-11	s	INDUCTOR, CHIP 100uH
L201	1-410-393-11	s	INDUCTOR, CHIP 100uH
L500	1-412-166-11	s	INDUCTOR 0.18uH [for NTSC]
	1-412-164-11	s	INDUCTOR 0.12uH [for PAL]
L501	1-412-143-11	s	INDUCTOR 39uH
L502	1-408-783-00	s	INDUCTOR, CHIP 33uH
L503	1-408-781-00	s	INDUCTOR, CHIP 22uH
L504	1-408-781-00	s	INDUCTOR, CHIP 22uH
L700	1-424-641-11	s	COIL, CHOKE 22uH
L701	1-424-641-11	s	COIL, CHOKE 22uH
L702	1-424-641-11	s	COIL, CHOKE 22uH
L704	1-424-641-11	s	COIL, CHOKE 22uH
Q1	8-729-028-91	s	TRANSISTOR DTA144EUA-T106 [for NTSC]
Q2	8-729-140-63	s	TRANSISTOR 2SA1611-M5M6
Q3	8-729-209-06	s	TRANSISTOR 2SC4213-A [for NTSC]
Q4	8-729-209-06	s	TRANSISTOR 2SC4213-A [for NTSC]
Q5-9	8-729-140-63	s	TRANSISTOR 2SA1611-M5M6
Q10	8-729-117-32	s	TRANSISTOR 2SC4177
Q11	8-729-117-32	s	TRANSISTOR 2SC4177
Q12	8-729-117-32	s	TRANSISTOR 2SC4177
Q13	8-729-143-07	s	TRANSISTOR 2SA1610-YY33
Q14-19	8-729-117-32	s	TRANSISTOR 2SC4177
Q20	8-729-143-07	s	TRANSISTOR 2SA1610-YY33
Q21	8-729-117-32	s	TRANSISTOR 2SC4177
Q22	8-729-117-32	s	TRANSISTOR 2SC4177
Q23	8-729-117-32	s	TRANSISTOR 2SC4177
Q24	8-729-140-63	s	TRANSISTOR 2SA1611-M5M6
Q26	8-729-140-63	s	TRANSISTOR 2SA1611-M5M6
Q27	8-729-117-32	s	TRANSISTOR 2SC4177
Q28	8-729-140-63	s	TRANSISTOR 2SA1611-M5M6
Q29	8-729-117-32	s	TRANSISTOR 2SC4177
Q30	8-729-140-63	s	TRANSISTOR 2SA1611-M5M6
Q200	8-729-140-63	s	TRANSISTOR 2SA1611-M5M6
Q201	8-729-140-63	s	TRANSISTOR 2SA1611-M5M6
Q202-206	8-729-117-32	s	TRANSISTOR 2SC4177
Q207	8-729-140-63	s	TRANSISTOR 2SA1611-M5M6
Q208	8-729-117-32	s	TRANSISTOR 2SC4177
Q209	8-729-117-32	s	TRANSISTOR 2SC4177
Q210	8-729-140-63	s	TRANSISTOR 2SA1611-M5M6
Q211	8-729-143-07	s	TRANSISTOR 2SA1610-YY33
Q212	8-729-143-07	s	TRANSISTOR 2SA1610-YY33

(VPR-12/12P BOARD)

Ref. No. or Q'ty	Part No.	SP	Description
Q213	8-729-118-56	s	TRANSISTOR 2SK852-X2
Q214	8-729-140-63	s	TRANSISTOR 2SA1611-M5M6
Q215	8-729-904-41	s	TRANSISTOR FMY3
Q216	8-729-117-32	s	TRANSISTOR 2SC4177
Q217	8-729-140-63	s	TRANSISTOR 2SA1611-M5M6
Q500	8-729-140-63	s	TRANSISTOR 2SA1611-M5M6
Q501	8-729-117-32	s	TRANSISTOR 2SC4177
Q502	8-729-907-46	s	TRANSISTOR IMZ1
Q700	8-729-807-34	s	TRANSISTOR 2SB1123-S
Q701	8-729-807-51	s	TRANSISTOR 2SD1623-S
Q702	8-729-807-34	s	TRANSISTOR 2SB1123-S
Q703	8-729-807-34	s	TRANSISTOR 2SB1123-S
Q704	8-729-807-34	s	TRANSISTOR 2SB1123-S
Q705	8-729-807-34	s	TRANSISTOR 2SB1123-S
Q706	8-729-807-51	s	TRANSISTOR 2SD1623-S
Q707	8-729-807-34	s	TRANSISTOR 2SB1123-S
Q708	8-729-807-34	s	TRANSISTOR 2SB1123-S
Q709	8-729-807-34	s	TRANSISTOR 2SB1123-S
Q710	8-729-807-34	s	TRANSISTOR 2SB1123-S
Q711	8-729-807-51	s	TRANSISTOR 2SD1623-S
Q712	8-729-807-34	s	TRANSISTOR 2SB1123-S
R1	1-216-025-00	s	METAL, CHIP 100 5% 1/10W
R2	1-216-089-00	s	METAL, CHIP 47k 5% 1/10W
R3	1-208-806-11	s	METAL, CHIP 10K 0.5% 1/10W
R4	1-208-806-11	s	METAL, CHIP 10K 0.5% 1/10W
R5	1-208-806-11	s	METAL, CHIP 10K 0.5% 1/10W
R6	1-216-065-00	s	METAL, CHIP 4.7K 5% 1/10W
R7	1-216-065-00	s	METAL, CHIP 4.7K 5% 1/10W [for NTSC]
R8	1-216-065-00	s	METAL, CHIP 4.7K 5% 1/10W [for NTSC]
R9	1-208-771-11	s	METAL, CHIP 360 0.5% 1/10W [for NTSC]
	1-216-295-00	s	RES, CHIP 0 [for PAL]
R10	1-208-771-11	s	METAL, CHIP 360 0.5% 1/10W [for NTSC]
	1-216-295-00	s	RES, CHIP 0 [for PAL]
R11	1-216-081-00	s	METAL, CHIP 22K 5% 1/10W [for NTSC]
R12	1-216-639-11	s	METAL, CHIP 330 0.5% 1/10W
R13	1-208-810-11	s	METAL, CHIP 15K 0.5% 1/10W [for PAL]
R14	1-208-784-11	s	METAL, CHIP 1.2K 0.5% 1/10W
R15	1-216-649-11	s	METAL, CHIP 820 0.5% 1/10W
R16	1-216-650-11	s	METAL, CHIP 910 0.5% 1/10W [for NTSC]
R17	1-216-650-11	s	METAL, CHIP 910 0.5% 1/10W [for NTSC]
R18	1-216-017-00	s	METAL, CHIP 47 5% 1/10W
R19	1-216-017-00	s	METAL, CHIP 47 5% 1/10W
R20	1-216-017-00	s	METAL, CHIP 47 5% 1/10W
R21	1-216-049-11	s	METAL, CHIP 1K 5% 1/10W
R22	1-216-639-11	s	METAL, CHIP 330 0.5% 1/10W
R23	1-208-774-11	s	METAL, CHIP 470 0.5% 1/10W
R24	1-208-774-11	s	METAL, CHIP 470 0.5% 1/10W
R29	1-216-631-11	s	METAL, CHIP 150 0.5% 1/10W
R30	1-216-631-11	s	METAL, CHIP 150 0.5% 1/10W

(VPR-12/12P BOARD)

Ref. No. or Q'ty	Part No.	SP	Description
R31	1-216-631-11	s	METAL, CHIP 150 0.5% 1/10W
R32	1-216-049-11	s	METAL, CHIP 1K 5% 1/10W
R33	1-216-661-11	s	METAL, CHIP 2.7K 0.5% 1/10W
R34	1-216-631-11	s	METAL, CHIP 150 0.5% 1/10W
R35	1-216-631-11	s	METAL, CHIP 150 0.5% 1/10W
R36	1-216-631-11	s	METAL, CHIP 150 0.5% 1/10W
R37	1-216-049-11	s	METAL, CHIP 1K 5% 1/10W
R38	1-216-049-11	s	METAL, CHIP 1K 5% 1/10W
R39	1-216-049-11	s	METAL, CHIP 1K 5% 1/10W
R40	1-216-624-11	s	METAL, CHIP 75 0.5% 1/10W
R41	1-216-603-11	s	METAL, CHIP 10 0.5% 1/10W [for NTSC]
	1-216-295-00	s	RES, CHIP 0 [for PAL]
R42	1-216-603-11	s	METAL, CHIP 10 0.5% 1/10W [for NTSC]
	1-216-295-00	s	RES, CHIP 0 [for PAL]
R43	1-216-631-11	s	METAL, CHIP 150 0.5% 1/10W
R44	1-216-635-11	s	METAL, CHIP 220 0.5% 1/10W
R45	1-216-635-11	s	METAL, CHIP 220 0.5% 1/10W
R46	1-216-667-11	s	METAL, CHIP 4.7K 0.5% 1/10W
R47	1-216-057-00	s	METAL, CHIP 2.2K 5% 1/10W
R48	1-216-073-00	s	METAL, CHIP 10K 5% 1/10W
R49	1-216-655-11	s	METAL, CHIP 1.5K 0.5% 1/10W
R50	1-216-635-11	s	METAL, CHIP 220 0.5% 1/10W
R51	1-216-655-11	s	METAL, CHIP 1.5K 0.5% 1/10W
R52	1-216-635-11	s	METAL, CHIP 220 0.5% 1/10W
R53	1-216-655-11	s	METAL, CHIP 1.5K 0.5% 1/10W
R54	1-216-635-11	s	METAL, CHIP 220 0.5% 1/10W
R55	1-216-667-11	s	METAL, CHIP 4.7K 0.5% 1/10W
R56	1-216-667-11	s	METAL, CHIP 4.7K 0.5% 1/10W
R57	1-216-667-11	s	METAL, CHIP 4.7K 0.5% 1/10W
R58	1-216-025-00	s	METAL, CHIP 100 5% 1/10W
R59	1-216-025-00	s	METAL, CHIP 100 5% 1/10W
R60	1-216-025-00	s	METAL, CHIP 100 5% 1/10W
R61	1-216-133-00	s	METAL, CHIP 3.3M 5% 1/10W
R63	1-216-133-00	s	METAL, CHIP 3.3M 5% 1/10W
R64	1-216-049-11	s	METAL, CHIP 1K 5% 1/10W
R65	1-216-049-11	s	METAL, CHIP 1K 5% 1/10W
R66	1-216-049-11	s	METAL, CHIP 1K 5% 1/10W
R67	1-216-057-00	s	METAL, CHIP 2.2K 5% 1/10W
R68	1-216-065-00	s	METAL, CHIP 4.7K 5% 1/10W
R69	1-216-073-00	s	METAL, CHIP 10K 5% 1/10W
R70	1-216-121-00	s	METAL, CHIP 1M 5% 1/10W
R71	1-216-073-00	s	METAL, CHIP 10K 5% 1/10W
R72	1-216-041-00	s	METAL, CHIP 470 5% 1/10W
R73	1-216-065-00	s	METAL, CHIP 4.7K 5% 1/10W
R74	1-216-041-00	s	METAL, CHIP 470 5% 1/10W
R75	1-216-065-00	s	METAL, CHIP 4.7K 5% 1/10W
R76	1-216-041-00	s	METAL, CHIP 470 5% 1/10W
R77	1-216-651-11	s	METAL, CHIP 1K 0.5% 1/10W
R78	1-216-121-00	s	METAL, CHIP 1M 5% 1/10W
R79	1-216-121-00	s	METAL, CHIP 1M 5% 1/10W
R80	1-216-121-00	s	METAL, CHIP 1M 5% 1/10W
R81	1-216-661-11	s	METAL, CHIP 2.7K 0.5% 1/10W
R82	1-216-651-11	s	METAL, CHIP 1K 0.5% 1/10W
R83	1-208-806-11	s	METAL, CHIP 10K 0.5% 1/10W
R84	1-208-806-11	s	METAL, CHIP 10K 0.5% 1/10W
R85	1-208-806-11	s	METAL, CHIP 10K 0.5% 1/10W

(VPR-12/12P BOARD)

Ref. No. or Q'ty	Part No.	SP	Description
R86	1-216-041-00	s	METAL, CHIP 470 5% 1/10W
R87	1-216-041-00	s	METAL, CHIP 470 5% 1/10W
R88	1-216-041-00	s	METAL, CHIP 470 5% 1/10W
R89	1-216-017-00	s	METAL, CHIP 47 5% 1/10W
R90	1-216-017-00	s	METAL, CHIP 47 5% 1/10W
R91	1-216-017-00	s	METAL, CHIP 47 5% 1/10W
R92	1-216-041-00	s	METAL, CHIP 470 5% 1/10W
R93	1-208-774-11	s	METAL, CHIP 470 0.5% 1/10W
R94	1-216-041-00	s	METAL, CHIP 470 5% 1/10W
R95	1-216-081-00	s	METAL, CHIP 22K 5% 1/10W
R96	1-216-017-00	s	METAL, CHIP 47 5% 1/10W
R97	1-216-081-00	s	METAL, CHIP 22K 5% 1/10W
R98	1-216-081-00	s	METAL, CHIP 22K 5% 1/10W
R99	1-208-800-11	s	METAL, CHIP 5.6K 0.5% 1/10W
R100	1-208-800-11	s	METAL, CHIP 5.6K 0.5% 1/10W
R101	1-208-803-11	s	METAL, CHIP 7.5K 0.5% 1/10W
R102	1-208-806-11	s	METAL, CHIP 10K 0.5% 1/10W
R103	1-208-774-11	s	METAL, CHIP 470 0.5% 1/10W
R104	1-218-766-11	s	METAL, CHIP 390K 0.5% 1/10W
R105	1-216-696-11	s	METAL, CHIP 75K 0.5% 1/10W
R106	1-216-687-11	s	METAL, CHIP 33K 0.5% 1/10W
R107	1-216-696-11	s	METAL, CHIP 75K 0.5% 1/10W
R108	1-218-766-11	s	METAL, CHIP 390K 0.5% 1/10W
R111	1-216-295-00	s	RES, CHIP 0
R116	1-216-073-00	s	METAL, CHIP 10K 5% 1/10W
R117	1-216-073-00	s	METAL, CHIP 10K 5% 1/10W
R118	1-216-685-11	s	METAL, CHIP 27K 0.5% 1/10W
R121	1-216-295-00	s	RES, CHIP 0
R126	1-216-073-00	s	METAL, CHIP 10K 5% 1/10W
R127	1-216-073-00	s	METAL, CHIP 10K 5% 1/10W
R128-132	1-208-774-11	s	METAL, CHIP 470 0.5% 1/10W
R133	1-208-806-11	s	METAL, CHIP 10K 0.5% 1/10W
R134	1-216-627-11	s	METAL, CHIP 100 0.5% 1/10W
R135	1-216-627-11	s	METAL, CHIP 100 0.5% 1/10W
R136	1-208-774-11	s	METAL, CHIP 470 0.5% 1/10W
R137	1-208-806-11	s	METAL, CHIP 10K 0.5% 1/10W
R138	1-216-097-00	s	METAL, CHIP 100K 5% 1/10W
R140	1-216-097-00	s	METAL, CHIP 100K 5% 1/10W
R141	1-216-295-00	s	RES, CHIP 0
R142	1-216-097-00	s	METAL, CHIP 100K 5% 1/10W
R144	1-216-097-00	s	METAL, CHIP 100K 5% 1/10W
R146	1-216-073-00	s	METAL, CHIP 10K 5% 1/10W
R147	1-208-803-11	s	METAL, CHIP 7.5K 0.5% 1/10W
R148	1-208-806-11	s	METAL, CHIP 10K 0.5% 1/10W
R149	1-208-806-11	s	METAL, CHIP 10K 0.5% 1/10W
R150	1-208-774-11	s	METAL, CHIP 470 0.5% 1/10W
R152	1-218-766-11	s	METAL, CHIP 390K 0.5% 1/10W
R153	1-216-619-11	s	METAL, CHIP 47 0.5% 1/10W
R154	1-208-806-11	s	METAL, CHIP 10K 0.5% 1/10W
R155	1-208-806-11	s	METAL, CHIP 10K 0.5% 1/10W
R156	1-216-696-11	s	METAL, CHIP 75K 0.5% 1/10W
R157	1-216-687-11	s	METAL, CHIP 33K 0.5% 1/10W
R158	1-216-685-11	s	METAL, CHIP 27K 0.5% 1/10W
R159	1-216-639-11	s	METAL, CHIP 330 0.5% 1/10W
R160	1-208-784-11	s	METAL, CHIP 1.2K 0.5% 1/10W
R161	1-216-025-00	s	METAL, CHIP 100 5% 1/10W
R162	1-216-073-00	s	METAL, CHIP 10K 5% 1/10W
R163	1-216-073-00	s	METAL, CHIP 10K 5% 1/10W
R164	1-216-073-00	s	METAL, CHIP 10K 5% 1/10W

(VPR-12/12P BOARD)

Ref. No. or Q'ty	Part No.	SP	Description
R165	1-216-073-00	s	METAL, CHIP 10K 5% 1/10W
R167	1-216-295-00	s	RES, CHIP 0
R168	1-216-295-00	s	RES, CHIP 0
R170-189	1-216-025-00	s	METAL, CHIP 100 5% 1/10W
R190	1-216-033-00	s	METAL, CHIP 220 5% 1/10W
R191	1-216-033-00	s	METAL, CHIP 220 5% 1/10W
R193	1-216-033-00	s	METAL, CHIP 220 5% 1/10W
R195	1-216-033-00	s	METAL, CHIP 220 5% 1/10W
R196	1-216-033-00	s	METAL, CHIP 220 5% 1/10W
R198	1-216-033-00	s	METAL, CHIP 220 5% 1/10W
R200	1-216-089-00	s	METAL, CHIP 47k 5% 1/10W
R201	1-216-089-00	s	METAL, CHIP 47k 5% 1/10W
R202	1-216-089-00	s	METAL, CHIP 47k 5% 1/10W
R203	1-216-033-00	s	METAL, CHIP 220 5% 1/10W
R204	1-216-089-00	s	METAL, CHIP 47k 5% 1/10W
R205	1-216-073-00	s	METAL, CHIP 10K 5% 1/10W
R206	1-216-097-00	s	METAL, CHIP 100K 5% 1/10W
R207	1-216-097-00	s	METAL, CHIP 100K 5% 1/10W
R208	1-216-089-00	s	METAL, CHIP 47k 5% 1/10W
R209	1-216-089-00	s	METAL, CHIP 47k 5% 1/10W
R210	1-216-049-11	s	METAL, CHIP 1K 5% 1/10W
R211	1-216-089-00	s	METAL, CHIP 47k 5% 1/10W
R212	1-216-049-11	s	METAL, CHIP 1K 5% 1/10W
R213	1-216-073-00	s	METAL, CHIP 10K 5% 1/10W
R214	1-216-049-11	s	METAL, CHIP 1K 5% 1/10W
R215	1-216-097-00	s	METAL, CHIP 100K 5% 1/10W
R216	1-216-619-11	s	METAL, CHIP 47 0.5% 1/10W
R217	1-216-049-11	s	METAL, CHIP 1K 5% 1/10W
R218	1-216-057-00	s	METAL, CHIP 2.2K 5% 1/10W
R219	1-216-065-00	s	METAL, CHIP 4.7K 5% 1/10W
R220	1-216-033-00	s	METAL, CHIP 220 5% 1/10W
R221	1-216-033-00	s	METAL, CHIP 220 5% 1/10W
R222	1-216-049-11	s	METAL, CHIP 1K 5% 1/10W
R223	1-216-635-11	s	METAL, CHIP 220 0.5% 1/10W
R224	1-216-647-11	s	METAL, CHIP 680 0.5% 1/10W
R225	1-216-049-11	s	METAL, CHIP 1K 5% 1/10W
R226	1-216-033-00	s	METAL, CHIP 220 5% 1/10W
R227	1-216-097-00	s	METAL, CHIP 100K 5% 1/10W
R229	1-218-763-11	s	METAL, CHIP 300K 0.5% 1/10W
R230	1-216-049-11	s	METAL, CHIP 1K 5% 1/10W
R231	1-208-774-11	s	METAL, CHIP 470 0.5% 1/10W
R232	1-216-647-11	s	METAL, CHIP 680 0.5% 1/10W
R233	1-216-009-00	s	METAL, CHIP 22 5% 1/10W
R234	1-208-774-11	s	METAL, CHIP 470 0.5% 1/10W
R235	1-216-049-11	s	METAL, CHIP 1K 5% 1/10W
R236	1-216-614-11	s	METAL, CHIP 30 0.50% 1/10W
R237	1-216-633-11	s	METAL, CHIP 180 0.5% 1/10W
R238	1-216-649-11	s	METAL, CHIP 820 0.5% 1/10W
R239	1-216-057-00	s	METAL, CHIP 2.2K 5% 1/10W
R240	1-208-784-11	s	METAL, CHIP 1.2K 0.5% 1/10W
R241	1-216-635-11	s	METAL, CHIP 220 0.5% 1/10W
R242	1-216-667-11	s	METAL, CHIP 4.7K 0.5% 1/10W
R243	1-216-025-00	s	METAL, CHIP 100 5% 1/10W
R244	1-216-049-11	s	METAL, CHIP 1K 5% 1/10W
R245	1-216-049-11	s	METAL, CHIP 1K 5% 1/10W
R246	1-216-663-11	s	METAL, CHIP 3.3K 0.5% 1/10W
R247	1-216-073-00	s	METAL, CHIP 10K 5% 1/10W
R248	1-216-041-00	s	METAL, CHIP 470 5% 1/10W
R249	1-216-121-00	s	METAL, CHIP 1M 5% 1/10W

(VPR-12/12P BOARD)

Ref. No. or Q'ty	Part No.	SP	Description
R250	1-208-806-11	s	METAL, CHIP 10K 0.5% 1/10W
R251	1-216-041-00	s	METAL, CHIP 470 5% 1/10W
R252	1-216-017-00	s	METAL, CHIP 47 5% 1/10W
R253	1-216-081-00	s	METAL, CHIP 22K 5% 1/10W
R254	1-218-763-11	s	METAL, CHIP 300K 0.5% 1/10W
R255	1-216-651-11	s	METAL, CHIP 1K 0.5% 1/10W
R256	1-216-073-00	s	METAL, CHIP 10K 5% 1/10W
R257	1-216-057-00	s	METAL, CHIP 2.2K 5% 1/10W
R258	1-216-049-11	s	METAL, CHIP 1K 5% 1/10W
R259	1-216-646-11	s	METAL, CHIP 620 0.5% 1/10W
R260	1-216-017-00	s	METAL, CHIP 47 5% 1/10W
R261	1-216-649-11	s	METAL, CHIP 820 0.5% 1/10W
R262	1-216-049-11	s	METAL, CHIP 1K 5% 1/10W
R263	1-216-117-00	s	METAL, CHIP 680K 5% 1/10W
R264	1-208-801-11	s	METAL, CHIP 6.2K 0.5% 1/10W
R265	1-216-049-11	s	METAL, CHIP 1K 5% 1/10W
R266	1-208-822-11	s	METAL, CHIP 47K 0.5% 1/10W
R267	1-216-295-00	s	RES, CHIP 0
R268	1-216-652-11	s	METAL, CHIP 1.1K 0.5% 1/10W
R269	1-216-656-11	s	METAL, CHIP 1.6K 0.5% 1/10W
R270	1-216-661-11	s	METAL, CHIP 2.7K 0.5% 1/10W
R271	1-216-684-11	s	METAL, CHIP 24K 0.5% 1/10W
R272	1-216-661-11	s	METAL, CHIP 2.7K 0.5% 1/10W
R273	1-216-667-11	s	METAL, CHIP 4.7K 0.5% 1/10W
R274	1-216-025-00	s	METAL, CHIP 100 5% 1/10W
R275	1-216-049-11	s	METAL, CHIP 1K 5% 1/10W
R276	1-216-057-00	s	METAL, CHIP 2.2K 5% 1/10W
R277	1-216-073-00	s	METAL, CHIP 10K 5% 1/10W
R278	1-216-690-11	s	METAL, CHIP 43K 0.5% 1/10W
R279	1-208-812-11	s	METAL, CHIP 18K 0.5% 1/10W
R280	1-216-133-00	s	METAL, CHIP 3.3M 5% 1/10W
R281	1-208-799-11	s	METAL, CHIP 5.1K 0.5% 1/10W
R282	1-216-673-11	s	METAL, CHIP 8.2K 0.5% 1/10W [for NTSC]
	1-208-806-11	s	METAL, CHIP 10K 0.5% 1/10W [for PAL]
R284	1-216-057-00	s	METAL, CHIP 2.2K 5% 1/10W
R285	1-216-073-00	s	METAL, CHIP 10K 5% 1/10W
R286	1-216-073-00	s	METAL, CHIP 10K 5% 1/10W
R287	1-216-661-11	s	METAL, CHIP 2.7K 0.5% 1/10W
R288	1-216-121-00	s	METAL, CHIP 1M 5% 1/10W
R289	1-216-053-00	s	METAL, CHIP 1.5K 5% 1/10W
R290	1-216-651-11	s	METAL, CHIP 1K 0.5% 1/10W
R291	1-216-079-00	s	METAL, CHIP 18K 5% 1/10W
R292	1-216-651-11	s	METAL, CHIP 1K 0.5% 1/10W
R293	1-216-624-11	s	METAL, CHIP 75 0.5% 1/10W
R294	1-216-097-00	s	METAL, CHIP 100K 5% 1/10W
R297	1-216-295-00	s	RES, CHIP 0
R299	1-216-295-00	s	RES, CHIP 0
R300	1-216-097-00	s	METAL, CHIP 100K 5% 1/10W [for NTSC]
R301	1-216-295-00	s	RES, CHIP 0 [for PAL]
R302	1-216-017-00	s	METAL, CHIP 47 5% 1/10W
R303	1-216-065-00	s	METAL, CHIP 4.7K 5% 1/10W
R304	1-216-065-00	s	METAL, CHIP 4.7K 5% 1/10W
R305	1-218-766-11	s	METAL, CHIP 390K 0.5% 1/10W
R306	1-208-803-11	s	METAL, CHIP 7.5K 0.5% 1/10W
R307	1-208-806-11	s	METAL, CHIP 10K 0.5% 1/10W
R308	1-216-041-00	s	METAL, CHIP 470 5% 1/10W

(VPR-12/12P BOARD)

Ref. No. or Q'ty	Part No.	SP	Description
R309	1-216-097-00	s	METAL, CHIP 100K 5% 1/10W [for NTSC]
R310	1-216-295-00	s	RES, CHIP 0 [for PAL]
R311	1-216-696-11	s	METAL, CHIP 75K 0.5% 1/10W
R313	1-216-295-00	s	RES, CHIP 0
R315	1-216-295-00	s	RES, CHIP 0
R316	1-216-097-00	s	METAL, CHIP 100K 5% 1/10W
R318	1-216-687-11	s	METAL, CHIP 33K 0.5% 1/10W
R319	1-216-685-11	s	METAL, CHIP 27K 0.5% 1/10W
R320	1-216-663-11	s	METAL, CHIP 3.3K 0.5% 1/10W
R321	1-216-049-11	s	METAL, CHIP 1K 5% 1/10W
R322	1-216-655-11	s	METAL, CHIP 1.5K 0.5% 1/10W
R323	1-216-667-11	s	METAL, CHIP 4.7K 0.5% 1/10W
R324	1-216-671-11	s	METAL, CHIP 6.8K 0.5% 1/10W
R325	1-216-673-11	s	METAL, CHIP 8.2K 0.5% 1/10W
R326	1-216-025-00	s	METAL, CHIP 100 5% 1/10W
R327	1-216-073-00	s	METAL, CHIP 10K 5% 1/10W
R328	1-216-073-00	s	METAL, CHIP 10K 5% 1/10W
R329	1-216-073-00	s	METAL, CHIP 10K 5% 1/10W
R330	1-216-073-00	s	METAL, CHIP 10K 5% 1/10W
R331	1-216-659-11	s	METAL, CHIP 2.2K 0.5% 1/10W
R332	1-216-033-00	s	METAL, CHIP 220 5% 1/10W
R333	1-216-295-00	s	RES, CHIP 0 [for NTSC]
R334	1-216-295-00	s	RES, CHIP 0 [for PAL]
R337	1-216-033-00	s	METAL, CHIP 220 5% 1/10W
R338	1-216-045-00	s	METAL, CHIP 680 5% 1/10W
R339	1-208-801-11	s	METAL, CHIP 6.2K 0.5% 1/10W [for NTSC]
	1-208-800-11	s	METAL, CHIP 5.6K 0.5% 1/10W [for PAL]
R340	1-208-801-11	s	METAL, CHIP 6.2K 0.5% 1/10W
R341	1-216-655-11	s	METAL, CHIP 1.5K 0.5% 1/10W [for NTSC]
	1-216-657-11	s	METAL, CHIP 1.8K 0.5% 1/10W [for PAL]
R342	1-216-655-11	s	METAL, CHIP 1.5K 0.5% 1/10W
R343	1-216-097-00	s	METAL, CHIP 100K 5% 1/10W
R345	1-208-801-11	s	METAL, CHIP 6.2K 0.5% 1/10W
R346	1-216-073-00	s	METAL, CHIP 10K 5% 1/10W
R347	1-216-029-00	s	METAL, CHIP 150 5% 1/10W
R348	1-216-295-00	s	RES, CHIP 0
R349	1-208-774-11	s	METAL, CHIP 470 0.5% 1/10W
R350	1-208-774-11	s	METAL, CHIP 470 0.5% 1/10W
R352	1-216-097-00	s	METAL, CHIP 100K 5% 1/10W
R353	1-216-049-11	s	METAL, CHIP 1K 5% 1/10W
R354	1-216-687-11	s	METAL, CHIP 33K 0.5% 1/10W
R355	1-216-674-11	s	METAL, CHIP 9.1K 0.5% 1/10W
R357	1-216-129-00	s	METAL, CHIP 2.2M 5% 1/10W [for PAL]
R358	1-216-077-00	s	METAL, CHIP 15K 5% 1/10W
R351	1-216-295-00	s	RES, CHIP 0
R356	1-208-814-11	s	METAL, CHIP 22K 0.5% 1/10W
R359	1-216-049-11	s	METAL, CHIP 1K 5% 1/10W
R360	1-216-073-00	s	METAL, CHIP 10K 5% 1/10W
R361	1-216-073-00	s	METAL, CHIP 10K 5% 1/10W
R362	1-216-073-00	s	METAL, CHIP 10K 5% 1/10W
R363	1-216-073-00	s	METAL, CHIP 10K 5% 1/10W [for NTSC]
	1-216-667-11	s	METAL, CHIP 4.7K 0.5% 1/10W [for PAL]

(VPR-12/12P BOARD)

Ref. No. or Q'ty	Part No.	SP	Description
R364	1-216-049-11	s	METAL, CHIP 1K 5% 1/10W
R365	1-216-295-00	s	RES, CHIP 0
R366	1-216-017-00	s	METAL, CHIP 47 5% 1/10W
R367	1-216-017-00	s	METAL, CHIP 47 5% 1/10W
R368	1-216-017-00	s	METAL, CHIP 47 5% 1/10W
R369	1-216-033-00	s	METAL, CHIP 220 5% 1/10W
R370	1-216-045-00	s	METAL, CHIP 680 5% 1/10W
R371	1-216-049-11	s	METAL, CHIP 1K 5% 1/10W
R372	1-216-049-11	s	METAL, CHIP 1K 5% 1/10W
R373	1-208-814-11	s	METAL, CHIP 22K 0.5% 1/10W
R374	1-216-687-11	s	METAL, CHIP 33K 0.5% 1/10W
R375	1-216-029-00	s	METAL, CHIP 150 5% 1/10W
R376	1-216-029-00	s	METAL, CHIP 150 5% 1/10W
R377	1-216-089-00	s	METAL, CHIP 47k 5% 1/10W
R378	1-216-029-00	s	METAL, CHIP 150 5% 1/10W
R379	1-216-029-00	s	METAL, CHIP 150 5% 1/10W
R380	1-216-089-00	s	METAL, CHIP 47k 5% 1/10W
R381	1-216-688-11	s	METAL, CHIP 36K 0.5% 1/10W
R382	1-208-810-11	s	METAL, CHIP 15K 0.5% 1/10W
R397-411	1-216-025-00	s	METAL, CHIP 100 5% 1/10W
R412	1-216-033-00	s	METAL, CHIP 220 5% 1/10W
R414	1-216-033-00	s	METAL, CHIP 220 5% 1/10W
R415	1-216-049-11	s	METAL, CHIP 1K 5% 1/10W
R417-421	1-216-073-00	s	METAL, CHIP 10K 5% 1/10W
R422	1-218-763-11	s	METAL, CHIP 300K 0.5% 1/10W
R423	1-216-073-00	s	METAL, CHIP 10K 5% 1/10W
R424	1-216-049-11	s	METAL, CHIP 1K 5% 1/10W
R425	1-216-025-00	s	METAL, CHIP 100 5% 1/10W
R426	1-216-025-00	s	METAL, CHIP 100 5% 1/10W
R427	1-216-025-00	s	METAL, CHIP 100 5% 1/10W
R428	1-216-025-00	s	METAL, CHIP 100 5% 1/10W
R429	1-216-017-00	s	METAL, CHIP 47 5% 1/10W
R430	1-216-089-00	s	METAL, CHIP 47k 5% 1/10W
R431	1-215-417-00	s	METAL 680 1% 1/6W
R432	1-215-445-00	s	METAL 10K 1% 1/6W
R434	1-215-421-00	s	METAL 1K 1% 1/6W
R435	1-215-421-00	s	METAL 1K 1% 1/6W
R500	1-216-659-11	s	METAL, CHIP 2.2K 0.5% 1/10W
R501	1-216-661-11	s	METAL, CHIP 2.7K 0.5% 1/10W
R502	1-216-661-11	s	METAL, CHIP 2.7K 0.5% 1/10W
R503	1-218-772-11	s	METAL 680K 0.5% 1/10W
R516	1-218-764-11	s	METAL, CHIP 330K 0.5% 1/10W
R517	1-216-663-11	s	METAL, CHIP 3.3K 0.5% 1/10W
R518	1-216-651-11	s	METAL, CHIP 1K 0.5% 1/10W
R519	1-216-627-11	s	METAL, CHIP 100 0.5% 1/10W
R520	1-216-049-11	s	METAL, CHIP 1K 5% 1/10W
R521	1-208-801-11	s	METAL, CHIP 6.2K 0.5% 1/10W
R522	1-216-666-11	s	METAL, CHIP 4.3K 0.5% 1/10W
R523	1-216-637-11	s	METAL, CHIP 270 0.5% 1/10W
R524	1-216-295-00	s	RES, CHIP 0
R526	1-216-657-11	s	METAL, CHIP 1.8K 0.5% 1/10W [for PAL]
R529	1-208-784-11	s	METAL, CHIP 1.2K 0.5% 1/10W
R527	1-208-789-11	s	METAL, CHIP 2K 0.5% 1/10W
R528	1-216-667-11	s	METAL, CHIP 4.7K 0.5% 1/10W
R530	1-216-651-11	s	METAL, CHIP 1K 0.5% 1/10W
R531	1-216-649-11	s	METAL, CHIP 820 0.5% 1/10W
R532	1-208-785-11	s	METAL, CHIP 1.3K 0.5% 1/10W

(VPR-12/12P BOARD)

Ref. No. or Q'ty	Part No.	SP	Description
R533	1-216-097-00	s	METAL, CHIP 100K 5% 1/10W
R534	1-216-631-11	s	METAL, CHIP 150 0.5% 1/10W
R535	1-216-651-11	s	METAL, CHIP 1K 0.5% 1/10W
R536	1-216-631-11	s	METAL, CHIP 150 0.5% 1/10W
R537	1-216-609-11	s	METAL, CHIP 18 0.5% 1/10W [for NTSC]
	1-216-603-11	s	METAL, CHIP 10 0.5% 1/10W [for PAL]
R538	1-216-625-11	s	METAL, CHIP 82 0.5% 1/10W [for NTSC]
	1-216-613-11	s	METAL, CHIP 27 0.5% 1/10W [for PAL]
R539	1-216-656-11	s	METAL, CHIP 1.6K 0.5% 1/10W [for NTSC]
	1-216-661-11	s	METAL, CHIP 2.7K 0.5% 1/10W [for PAL]
R540	1-216-631-11	s	METAL, CHIP 150 0.5% 1/10W
R541	1-216-631-11	s	METAL, CHIP 150 0.5% 1/10W
R542	1-216-689-11	s	METAL, CHIP 39K 0.5% 1/10W [for PAL]
R543	1-208-784-11	s	METAL, CHIP 1.2K 0.5% 1/10W
R544	1-208-784-11	s	METAL, CHIP 1.2K 0.5% 1/10W
R545	1-218-763-11	s	METAL, CHIP 300K 0.5% 1/10W
R546	1-216-619-11	s	METAL, CHIP 47 0.5% 1/10W
R547	1-216-133-00	s	METAL, CHIP 3.3M 5% 1/10W
R548	1-216-069-00	s	METAL, CHIP 6.8K 5% 1/10W
R549	1-216-049-11	s	METAL, CHIP 1K 5% 1/10W
R550	1-216-049-11	s	METAL, CHIP 1K 5% 1/10W
R551	1-208-784-11	s	METAL, CHIP 1.2K 0.5% 1/10W
R552	1-216-655-11	s	METAL, CHIP 1.5K 0.5% 1/10W
R553	1-216-651-11	s	METAL, CHIP 1K 0.5% 1/10W
R554	1-216-295-00	s	RES, CHIP 0
R555	1-216-639-11	s	METAL, CHIP 330 0.5% 1/10W
R556	1-216-671-11	s	METAL, CHIP 6.8K 0.5% 1/10W
R557	1-208-774-11	s	METAL, CHIP 470 0.5% 1/10W
R558	1-216-659-11	s	METAL, CHIP 2.2K 0.5% 1/10W
R559	1-216-651-11	s	METAL, CHIP 1K 0.5% 1/10W
R560	1-216-667-11	s	METAL, CHIP 4.7K 0.5% 1/10W
R561	1-216-667-11	s	METAL, CHIP 4.7K 0.5% 1/10W
R562	1-216-057-00	s	METAL, CHIP 2.2K 5% 1/10W
R563	1-216-057-00	s	METAL, CHIP 2.2K 5% 1/10W
R565	1-216-646-11	s	METAL, CHIP 620 0.5% 1/10W
R566	1-216-624-11	s	METAL, CHIP 75 0.5% 1/10W
R567	1-216-624-11	s	METAL, CHIP 75 0.5% 1/10W
R568	1-216-624-11	s	METAL, CHIP 75 0.5% 1/10W
R569	1-216-624-11	s	METAL, CHIP 75 0.5% 1/10W
R570	1-216-646-11	s	METAL, CHIP 620 0.5% 1/10W
R700-704	1-216-089-00	s	METAL, CHIP 47k 5% 1/10W
R705	1-208-822-11	s	METAL, CHIP 47K 0.5% 1/10W
R706	1-216-089-00	s	METAL, CHIP 47k 5% 1/10W
R707	1-216-049-11	s	METAL, CHIP 1K 5% 1/10W
R708	1-216-049-11	s	METAL, CHIP 1K 5% 1/10W
R709	1-216-043-00	s	METAL, CHIP 560 5% 1/10W
R710	1-216-043-00	s	METAL, CHIP 560 5% 1/10W
R711	1-216-043-00	s	METAL, CHIP 560 5% 1/10W
R712	1-216-043-00	s	METAL, CHIP 560 5% 1/10W
R713	1-216-073-00	s	METAL, CHIP 10K 5% 1/10W
R714	1-216-043-00	s	METAL, CHIP 560 5% 1/10W
R715	1-216-073-00	s	METAL, CHIP 10K 5% 1/10W
R716	1-216-049-11	s	METAL, CHIP 1K 5% 1/10W

(VPR-12/12P BOARD)

Ref. No. or Q'ty	Part No.	SP	Description
R717	1-216-049-11	s	METAL, CHIP 1K 5% 1/10W
R718	1-216-043-00	s	METAL, CHIP 560 5% 1/10W
R719	1-216-043-00	s	METAL, CHIP 560 5% 1/10W
R720	1-216-043-00	s	METAL, CHIP 560 5% 1/10W
R721	1-216-043-00	s	METAL, CHIP 560 5% 1/10W
R722	1-216-073-00	s	METAL, CHIP 10K 5% 1/10W
R723	1-216-043-00	s	METAL, CHIP 560 5% 1/10W
R724	1-216-049-11	s	METAL, CHIP 1K 5% 1/10W
R725	1-216-049-11	s	METAL, CHIP 1K 5% 1/10W
R726	1-216-043-00	s	METAL, CHIP 560 5% 1/10W
R727	1-216-043-00	s	METAL, CHIP 560 5% 1/10W
R728	1-216-043-00	s	METAL, CHIP 560 5% 1/10W
R729	1-216-043-00	s	METAL, CHIP 560 5% 1/10W
R730	1-216-049-11	s	METAL, CHIP 1K 5% 1/10W
R731	1-216-049-11	s	METAL, CHIP 1K 5% 1/10W
R732	1-216-049-11	s	METAL, CHIP 1K 5% 1/10W
R733	1-216-295-00	s	RES, CHIP 0
RV200	1-237-032-11	s	RES, ADJ METAL 500
RV201	1-237-037-11	s	RES, ADJ METAL 20K
RV202	1-237-036-11	s	RES, ADJ METAL 10K
RV500	1-237-031-11	s	RES, ADJ METAL 200

```
------------
VR-194 BOARD
------------
Ref. No.
or Q'ty  Part No.     SP Description

1pc      1-657-808-11 o PRINTED CIRCUIT BOARD, VR-194

CN1      1-566-758-11 o CONNECTOR 3P, MALE
CN2      1-566-758-11 o CONNECTOR 3P, MALE
CN3      1-566-758-11 o CONNECTOR 3P, MALE
CN4      1-566-758-11 o CONNECTOR 3P, MALE
CN558    1-569-762-11 s CONNECTOR, BOARD TO BOATD 20P

R1       1-208-803-11 s METAL, CHIP 7.5K 0.5% 1/10W
R2       1-216-661-11 s METAL, CHIP 2.7K 0.5% 1/10W
R3       1-216-687-11 s METAL, CHIP 33K 0.5% 1/10W
R4       1-216-295-00 s RES, CHIP 0
R5       1-208-803-11 s METAL, CHIP 7.5K 0.5% 1/10W

R6       1-216-661-11 s METAL, CHIP 2.7K 0.5% 1/10W
R7       1-216-687-11 s METAL, CHIP 33K 0.5% 1/10W
R8       1-216-295-00 s RES, CHIP 0
R9       1-208-803-11 s METAL, CHIP 7.5K 0.5% 1/10W
R10      1-216-661-11 s METAL, CHIP 2.7K 0.5% 1/10W

R11      1-216-687-11 s METAL, CHIP 33K 0.5% 1/10W
R12      1-216-295-00 s RES, CHIP 0
R13      1-208-803-11 s METAL, CHIP 7.5K 0.5% 1/10W
R14      1-216-661-11 s METAL, CHIP 2.7K 0.5% 1/10W
R15      1-216-687-11 s METAL, CHIP 33K 0.5% 1/10W

R16      1-216-295-00 s RES, CHIP 0

SW1      1-570-863-11 s SWITCH, SLIDE
SW2      1-570-863-11 s SWITCH, SLIDE
SW3      1-570-863-11 s SWITCH, SLIDE
SW4      1-570-863-11 s SWITCH, SLIDE



------------
VR-205 BOARD
------------
Ref. No.
or Q'ty  Part No.     SP Description

6pcs     1-565-977-11 s CONTACT, FEMALE AWG28-32
1pc      1-565-978-11 o HOUSING, 6P
1pc      1-657-814-11 o PRINTED CIRCUIT BOARD, VR-205

RV1      1-241-577-11 s RES, VAR CARBON 20k/20k



------------
VR-206 BOARD
------------
Ref. No.
or Q'ty  Part No.     SP Description

3pcs     1-565-977-11 s CONTACT, FEMALE AWG28-32
1pc      1-569-618-11 o HOUSING, 3P
1pc      1-657-809-11 o PRINTED CIRCUIT BOARD, VR-206
1pc      1-955-097-11 o HARNESS, VR-VR

RV1      1-237-790-11 s RES, VAR CARBON 10K
```

5-4. Frame List

```
Ref. No.
or Q'ty  Part No.     SP Description

 2pcs    1-454-334-61 s SOLENOID
 1pc     1-454-383-31 s SOLENOID
 1pc     1-454-607-21 s SOLENOID
 1pc     1-507-743-21 s JACK, MINI STEREO
 1pc     1-507-863-51 s JACK, PHONE

 1pc  Δ  1-532-525-31 s BREAKER, CIRCUIT 6.3A 125V
 5pcs    1-561-336-00 s CONNECTOR, BNC, FEMALE
 1pc     1-698-335-11 s MOTOR, DC SVD-1489
 2pcs    1-774-157-11 s CONVERTER, COAXIAL CONNECTOR
 1pc     1-775-781-11 s CABLE, COAXIAL 220mm

 1pc     1-775-781-21 s CABLE, COAXIAL 220mm
 1pc     1-775-782-11 s CABLE, COAXIAL 240mm
 1pc     1-801-022-11 s DISPLAY MODULE, LIQUID CRYSTEL
 1pc     1-810-573-11 s SENSOR, DEW CONDENSATION

 1pc     8-825-770-73 s HEAD, EF291-21
 1pc     8-825-779-71 s CTL HEAD, PS244-21D
 1pc     8-825-920-01 s HEAD, AUIDO EPS244-2103J
 1pc     8-835-440-01 s MOTOR DN20-Q7Z1B
 2pcs    8-835-441-01 s MOTOR R432276751A

 1pc     8-835-534-01 s MOTOR, DC SCV-0702A/J-N

HARNESS (ADA-CP409)
(CN552/ADA-44 board to CN409/CP-260 board)
 1pc     1-955-101-11 o HARNESS, ADA-CP409
  CN552  1-573-183-11 o HOUSING, 13P
   12pcs 1-565-977-11 s CONTACT, FEMALE AWG28-32
  CN409  1-573-183-11 o HOUSING, 13P
   12pcs 1-565-977-11 s CONTACT, FEMALE AWG28-32

HARNESS (ADA-CP410)
(CN551/ADA-44 board to CN410/CP-260 board)
 1pc     1-955-100-11 o HARNESS, ADA-CP410
  CN551(12pcs)
         1-565-977-11 s CONTACT, FEMALE AWG28-32
  CN410(12pcs)
         1-565-977-11 s CONTACT, FEMALE AWG28-32

HARNESS (ADA-CP411)
(CN553/ADA-44 board to CN411/CP-260 board)
 1pc     1-955-113-11 o HARNESS, ADA-CP411

HARNESS (AIF136-MB36)
(CN401/CP-260 board to CN921/MB-601 board)
 1pc     1-953-430-11 o HARNESS, AIF136-MB36

HARNESS (BATT-CON)
(CN1/BATTERY CONNECTOR to CN915 and CN932/MB-601 board
 and CN442/FU-63 board)
 1pc     1-955-096-12 o HARNESS, BATT-CON
  CN1    1-766-377-12 s CONNECTOR, BATTERY
  CN915  1-569-617-11 o HOUSING, 2P
   1pc   1-565-977-11 s CONTACT, FEMALE AWG28-32
  CN932  1-535-893-11 o TAB, FASTON
  CN442  1-535-893-11 o TAB, FASTON

HARNESS (BP-90)
(BP-90 BATTERY CONNECTOR to MB-601 board)
 BATTERY 1-507-905-11 s JACK, DC

HARNESS (BRAKER-FU)
(CIRCUIT BREAKER to W2/FU-63 board)
(EXT DC IN connector to W1/FU-63 board)

HARNESS (BRAKER-PSW)
(CIRCUIT BREAKER to CN602/PSW-31 board)
  CN602  1-535-893-11 o TAB, FASTON
```

(FRAME)

Ref. No. or Q'ty	Part No.	SP	Description
HARNESS (CAM-CON)			
(CN1011/CAMERA connector to CN444/FU-63 board, CN453/CC-66 board, CN109/SST-3 board, CN402/CP-260 board and CN252/DIF-31 board)			
1pc	1-955-118-11	o	HARNESS, CAM-CON
CN1011	1-562-245-11	o	CONNECTOR, CAMERA 26P, FEMALE
CN444	1-569-197-11	o	HOUSING, 4P
4pcs	1-569-191-11	o	CONTACT, FEMALE AWG22-26
CN453	1-569-521-11	o	HOUSING, 11P
10pcs	1-565-977-11	s	CONTACT, FEMALE AWG28-32
CN109	1-565-978-11	o	HOUSING, 6P
6pcs	1-565-977-11	s	CONTACT, FEMALE AWG28-32
CN402	1-569-620-11	o	HOUSING, 5P
1pc	1-565-977-11	s	CONTACT, FEMALE AWG28-32
3pcs	1-766-387-11	o	CONTACT, FEMALE AWG28-26
HARNESS (CAP-HN14)			
(CN107/SST-3 board to CN1/CAPSTEN MOTOR)			
1pc	1-953-435-11	o	HARNESS, CAP-HN14
HARNESS (CC-CP)			
(CN454/CC-66 board to CN413/CP-260 board)			
1pc	1-955-099-11	o	HARNESS, CC-CP
CN454	1-569-618-11	o	HOUSING, 3P
2pcs	1-565-977-11	s	CONTACT, FEMALE AWG28-32
CN413	1-569-618-11	o	HOUSING, 3P
2pcs	1-565-977-11	s	CONTACT, FEMALE AWG28-32
HARNESS (CP-VR205)			
(CN407/CP-260 board to CN1/VR-205 board)			
CN407	1-565-978-11	o	HOUSING, 6P
6pcs	1-565-977-11	s	CONTACT, FEMALE AWG28-32
HARNESS (CP09-DUS)			
(CN421/CP-260 board to CN1/DUS-339 board)			
CN421	1-569-618-11	o	HOUSING, 3P
3pcs	1-565-977-11	s	CONTACT, FEMALE AWG28-32
CN1	1-569-618-11	o	HOUSING, 3P
3pcs	1-565-977-11	s	CONTACT, FEMALE AWG28-32
HARNESS (CS25-26)			
(CN1/CS-25 board to CN2/CS-26 board)			
1pc	1-948-401-12	s	HARNESS, CS25-26
CN1	1-569-196-11	o	HOUSING, 3P
3pcs	1-569-193-11	o	CONTACT, FEMALE
CN2	1-569-196-11	o	HOUSING, 3P
3pcs	1-569-193-11	o	CONTACT, FEMALE
(HARNESS (DC-OUT)			
(CN1013/EXT DC OUT connector to CN930/MB-601 board)			
CN1013	1-565-072-11	s	CONNECTOR, CIRCULAR 4P, FEMALE
CN930	1-569-618-11	o	HOUSING, 3P
2pcs	1-565-977-11	s	CONTACT, FEMALE AWG28-32
HARNESS (DPR-ADA56)			
(CN207/DPR-62 board to CN556/ADA-44 board)			
1pc	1-955-111-11	o	HARNESS, DPR-ADA56
HARNESS (DPR-ADA59)			
(CN208/DPR-62 board to CN559/ADA-44 board)			
1pc	1-955-112-11	o	HARNESS, DPR-ADA59
HARNESS (EQ-AH)			
(CN304/EQ-54 board to CUE HEAD/AH-52 board)			
1pc	1-955-119-12	o	HARNESS, EQ-AH
CN304	1-569-196-31	o	HOUSING, 3P
2pcs	1-569-193-11	o	CONTACT, FEMALE

(FRAME)

Ref. No. or Q'ty	Part No.	SP	Description
HARNESS (EQ-DR)			
(CN301 and CN303/EQ-54 board to CN2/DR-239 board)			
1pc	1-955-117-11	o	HARNESS, EQ-DR
CN301	1-569-199-11	o	HOUSING, 6P
2pcs	1-569-191-11	o	CONTACT, FEMALE AWG22-26
4pcs	1-569-193-11	o	CONTACT, FEMALE
CN303	1-569-199-41	o	HOUSING, 6P
2pcs	1-569-191-11	o	CONTACT, FEMALE AWG22-26
4pcs	1-569-193-11	o	CONTACT, FEMALE
CN2	1-580-582-11	o	HOUSING, 12P
4pcs	1-573-176-11	o	CONTACT, LY, FEMALE AWG22-26
8pcs	1-580-599-11	o	TERMINAL, SOLDERLESS
HARNESS (EXT DC GND)			
(EXT DC IN connector to CN931/MB-601 board)			
HARNESS (FU-CP)			
(CN445/FU-63 board to CN2/DC-85 board)			
(CN408/CP-260 board to CN1/DC-85 board)			
2pcs	1-955-108-11	o	HARNESS, FU-CP
HARNESS (HOT LINE)			
(CN441/FU-63 board to MB-601 board)			
CN441	1-535-893-11	o	TAB, FASTON
HARNESS (KEY-LCD)			
(CN463/KY-315 board to CN1 and CN2/AUDIO METER)			
1pc	1-955-095-11	o	HARNESS, KEY-LCD
CN463(10pcs)			
	1-565-977-11	s	CONTACT, FEMALE AWG28-32
CN1(8pcs)			
	1-569-193-11	o	CONTACT, FEMALE
HARNESS (MB-ADA)			
(CN914/MB-601 board to CN557/ADA-44 board)			
1pc	1-955-098-11	o	HARNESS, MB-ADA
CN914	1-569-618-11	o	HOUSING, 3P
3pcs	1-565-977-11	s	CONTACT, FEMALE AWG28-32
CN557	1-569-618-11	o	HOUSING, 3P
3pcs	1-565-977-11	s	CONTACT, FEMALE AWG28-32
HARNESS (MB-AH1)			
(CN949/MB-601 board to CUE ERASE HEAD and TC ERASE HEAD/AH-52 board)			
1pc	1-955-120-11	o	HARNESS, MB-AH1
CN949	1-569-199-11	o	HOUSING, 6P
4pcs	1-569-193-11	o	CONTACT, FEMALE
HARNESS (MB-AH2)			
(CN947/MB-601 board to TC HEAD/AH-52 board)			
1pc	1-955-121-11	o	HARNESS, MB-AH2
CN947	1-569-196-41	o	HOUSING, 3P
2pcs	1-569-193-11	o	CONTACT, FEMALE
HARNESS (MB-CC)			
(CN923/MB-601 board to CN451/CC-66 board)			
1pc	1-955-109-11	o	HARNESS, MB-CC
HARNESS (MB-DR1)			
(CN941/MB-601 board to CN3/DR-239 board)			
1pc	1-955-094-11	o	HARNESS, MB-DR1
CN941	1-565-979-11	o	HOUSING, 8P
8pcs	1-565-977-11	s	CONTACT, FEMALE AWG28-32
CN3	1-565-979-11	o	HOUSING, 8P
8pcs	1-565-977-11	s	CONTACT, FEMALE AWG28-32

(FRAME)

Ref. No.
or Q'ty Part No. SP Description

HARNESS (MB-DR2)
(CN913/MB-601 board to CN1/DR-239 board)
1pc 1-955-116-11 o HARNESS, MB-DR2
CN913 1-580-585-11 o HOUSING, 18P
6pcs 1-573-176-11 o CONTACT, LY, FEMALE AWG22-26
12pcs 1-580-599-11 o TERMINAL, SOLDERLESS
CN1 1-580-585-11 o HOUSING, 18P
6pcs 1-573-176-11 o CONTACT, LY, FEMALE AWG22-26
12pcs 1-580-599-11 o TERMINAL, SOLDERLESS

HARNESS (MB-FE)
(CN956/MB-601 board to FE HEAD/FE-11 board)
1pc 1-955-122-11 o HARNESS, MB-FE
CN956 1-569-196-21 o HOUSING, 3P
1pc 1-569-191-11 o CONTACT, FEMALE AWG22-26
2pcs 1-569-193-11 o CONTACT, FEMALE

HARNESS (MB44-T TOPA)
(CN944/MB-601 board to TAPE TOP SENSOR)
(CN958/MB-601 board to TAPA END SENSOR)
2pc 1-948-409-11 o HARNESS, MB44-TTOPA
SENSOR 1-543-316-21 s HEAD, SENSING (SMALL TYPE)
CN944 1-569-195-21 o HOUSING, 2P
2pcs 1-569-193-11 o CONTACT, FEMALE
CN958 1-569-195-21 o HOUSING, 2P
2pcs 1-569-193-11 o CONTACT, FEMALE

HARNESS (MB54-TR)
(CN954/MB-601 board to CN1/TR-57 board)
CN954 (4pcs)
1-569-193-11 o CONTACT, FEMALE
CN1 1-562-737-11 o HOUSING, 4P
4pcs 1-564-831-11 o CONTACT, FEMALE

HARNESS (MB56-CTL)
(CN955/MB-601 board to CN1/CTL head)
1pc 1-948-405-12 o HARNESS, MB56-CTL
CN955 1-569-196-11 o HOUSING, 3P
3pcs 1-569-193-11 o CONTACT, FEMALE
CN1 1-562-735-11 o HOUSING, 2P
2pcs 1-564-831-11 o CONTACT, FEMALE

HARNESS (MB57-CS)
(CN957/MB-601 board to CN1/CS-26 board)
CN957 (7pcs)
1-569-193-11 o CONTACT, FEMALE
CN1 (7pcs)
1-564-831-11 o CONTACT, FEMALE

HARNESS (PSW-FU)
(CN601/PSW-31 board to CN443/FU-63 board)
1pc 1-948-737-11 o HARNESS, PSW-FU
CN601 1-569-197-41 o HOUSING, 4P
4pcs 1-569-193-11 o CONTACT, FEMALE
CN443 1-569-197-41 o HOUSING, 4P
4pcs 1-569-193-11 o CONTACT, FEMALE

HARNESS (SST-ADA)
(CN111/SST-3 board to CN554/ADA-44 board)
(CN105/SST-3 board to CN1/CON-18 board)
2pcs 1-955-104-11 o HARNESS, SST-ADA

HARNESS (SST-CP)
(CN110/SST-3 board to CN412/CP-260 board)
1pc 1-955-103-11 o HARNESS, SST-CP
CN110 1-568-523-11 s HOUSING, 13P
CN412 1-568-523-11 s HOUSING, 13P

(FRAME)

Ref. No.
or Q'ty Part No. SP Description

HARNESS (SST-DET15)
(CN113/SST-3 board to CN1/DET-15 board)
1pc 1-955-124-11 o HARNESS, SST-DET15
CN113 1-569-196-41 o HOUSING, 3P
3pcs 1-569-193-11 o CONTACT, FEMALE
CN1 1-569-196-41 o HOUSING, 3P
3pcs 1-569-193-11 o CONTACT, FEMALE

HARNESS (SST-DET26)
(CN102/SST-3 board to CN1/DET-26 board)
1pc 1-955-123-11 o HARNESS, SST-DET26
CN102 1-569-197-11 o HOUSING, 4P
4pcs 1-569-193-11 o CONTACT, FEMALE
CN1 1-569-197-11 o HOUSING, 4P
4pcs 1-569-193-11 o CONTACT, FEMALE

HARNESS (SST-DSUB)
(CN106/SST-3 board to CN1010/REMOTE CONNECTOR)
1pc 1-955-115-11 o HARNESS, SST-DSUB
CN106 1-561-382-31 s CONNECTOR, 10P, FEMALE

HARNESS (SST-FU)
(CN115/SST-3 board to CN446/FU-63 board)
1pc 1-955-114-11 o HARNESS, SST-FU

HARNESS (SST-KEY1)
(CN103/SST-3 board to CN461/KY-315 board)
1pc 1-955-106-11 o HARNESS, SST-KEY1

HARNESS (SST-KEY2)
(CN104/SST-3 board to CN462/KY-315 board)
1pc 1-955-107-11 o HARNESS, SST-KEY2

HARNESS (SST-SE)
(CN101/SST-3 board to CN1/SE-233 board)
(CN209/VPR-12 board to CN457/CC-66 board)
2pcs 1-955-105-11 o HARNESS, SST-SE

HARNESS (TC5-VR15)
(CN112/SST-3 board to CN455/CC-66 board)
1pc 1-953-433-11 o HARNESS, TC5-VR15

HARNESS (TC8-CP18)
(CN108/SST-3 board to CN452/CC-66 board)
(CN555/ADA-44 board to CN206/DPR-62 board)
2pcs 1-953-429-11 o HARNESS, TC8-CP18

HARNESS (TC9-CP19)
(CN302/EQ-54 board to CN1/SR-56 board)
1pc 1-953-436-11 o HARNESS, TC9-CP19

HARNESS (VPR-CC56)
(CN210/VPR-12 board to CN456/CC-66 board)
1pc 1-955-110-11 o HARNESS, VPR-CC56

HARNESS (VR-VR)
(CN1, CN2, CN3 or CN4/VR-194 board to VR-206 board)
4pcs 1-955-097-11 o HARNESS, VR-VR
CNx 1-569-618-11 o HOUSING, 3P
3pcs 1-565-977-11 s CONTACT, FEMALE AWG28-32

HARNESS (XLR-(A)) [for UC,SY]
(AUDIO IN CH-1 connector to CN403/CP-260 board)
(AUDIO IN CH-2 connector to CN404/CP-260 board)
(AUDIO IN CH-3 connector to CN405/CP-260 board)
(AUDIO IN CH-4 connector to CN406/CP-260 board)
CH-x 1-566-616-11 s CONNECTOR, XLR 3P, FEMALE
CN40x 1-569-618-11 o HOUSING, 3P
3pcs 1-565-977-11 s CONTACT, FEMALE AWG28-32

(FRAME)

Ref. No. or Q'ty	Part No.	SP	Description
			HARNESS (XLR-(A)) [for J]
			(AUDIO OUT CH-1 connector to CN414/CP-260 board)
			(AUDIO OUT CH-2 connector to CN415/CP-260 board)
			(AUDIO OUT CH-3 connector to CN416/CP-260 board)
			(AUDIO OUT CH-4 connector to CN417/CP-260 board)
CH-x	1-566-617-11	s	CONNECTOR, XLR 3P, MALE
CN41x	1-569-618-11	o	HOUSING, 3P
3pcs	1-565-977-11	s	CONTACT, FEMALE AWG28-32
			HARNESS (XLR-(B)) [for UC,SY]
			(AUDIO OUT CH-1 connector to CN414/CP-260 board)
			(AUDIO OUT CH-2 connector to CN415/CP-260 board)
			(AUDIO OUT CH-3 connector to CN416/CP-260 board)
			(AUDIO OUT CH-4 connector to CN417/CP-260 board)
CH-x	1-566-617-11	s	CONNECTOR, XLR 3P, MALE
CN41x	1-569-618-11	o	HOUSING, 3P
3pcs	1-565-977-11	s	CONTACT, FEMALE AWG28-32
			HARNESS (XLR-(B)) [for J]
			(AUDIO IN CH-1 connector to CN403/CP-260 board)
			(AUDIO IN CH-2 connector to CN404/CP-260 board)
			(AUDIO IN CH-3 connector to CN405/CP-260 board)
			(AUDIO IN CH-4 connector to CN406/CP-260 board)
CH-x	1-566-616-11	s	CONNECTOR, XLR 3P, FEMALE
CN40x	1-569-618-11	o	HOUSING, 3P
3pcs	1-565-977-11	s	CONTACT, FEMALE AWG28-32

5-5. Accessories List

Ref. No. or Q'ty	Part No.	SP	Description
1	A-6772-374-A	s	BELT ASSY, SHOULDER

5-6. Optional Fixtures List

Part No.	SP	Description
J-6001-820-A	o	UPPER DRUM ECCENTRICITY ADJUSTMENT TOOL (3)
J-6001-830-A	o	UPPER DRUM ECCENTRICITY ADJUSTMENT TOOL (2)
J-6031-840-B	o	MULTI CONNECTOR CABLE (CIBNC)
J-6080-840-A	o	SMALL MIRROR
J-6086-570-A	o	REFERENCE FLAT PLATE
J-6087-000-A	o	UPPER DRUM ECCENTRICITY ADJUSTMENT TOOL (5)
J-6152-450-A	o	WIRE CLEARANCE GAUGE SET
J-6322-420-A	o	TAPE GUIDE ADJUSTMENT DRIVER (45)
J-6322-420-3	o	TG DRIVER SPARE BIT (ACROSS 0.89)
J-6323-530-A	o	STOP WASHER FASTENING TOOL
J-6325-110-A	o	TORQUE SCREWDRIVER'S BIT (FOR M1.4)
J-6325-380-A	o	TORQUE SCREWDRIVER'S BIT (FOR M2)
J-6325-400-A	o	TORQUE SCREWDRIVER'S (FOR 3 KG)
J-6325-530-A	o	UPPER DRUM ECCENTRICITY ADJUSTMENT TOOL (6)
J-6326-120-A	o	HEXAGON BIT
J-6326-530-A	o	CASSETTE REFERENCE PLATE (L)
J-6326-940-A	o	S SIDE GAUGE
J-6329-350-A	o	REEL TABLE HEIGHT GAUGE, MW-935
J-6421-330-A	o	EXTENSION BOARD, BC-133
J-6421-340-A	o	EXTENSION BOARD, BC-134
J-6421-430-A	o	EXTENSION HARNESS, VIDEO
J-6421-440-A	o	EXTENSION HARNESS, AUDIO
J-7031-030-A	o	S-TENSION ARM POSITIONING PIN
J-7031-040-A	o	WEIGHT FOR S-TENSION ADJUSTMENT (W76.7)
J-7031-050-A	o	WEIGHT FOR S-TENSION (W 44)
J-7031-260-A	o	MASTER BLOCK (T2)
J-7031-270-A	o	MASTER BLOCK (S2)
J-7031-280-A	o	S-TEN ADJUSTING TABLE
J-7031-450-A	o	END SENSOR POSITIONING TOOL
J-7031-460-A	o	TORQUE SCREWDRIVER'S HEXAGONAL BIT (ACROSS 1.27)
2-034-697-00	o	CLEANING PIECE
7-651-000-10	o	SONY GREASE, SGL-601 (50 G)
7-651-000-11	o	SONY GREASE, SGL-801 (50 G)
7-661-018-18	o	MITSUBISHI DIAMOND MACHINE OIL HYDRO FLUID NT-68
7-700-736-05	o	L-SHAPED HEXAGONAL WRENCH (D=1.5 mm)
7-700-736-06	o	L-SHAPED HEXAGONAL WRENCH (D=0.9 mm)
8-960-073-01	o	ALIGNMENT TAPE, ZR5-1 [for NTSC]
8-960-073-11	o	ALIGNMENT TAPE, ZR2-1 [for NTSC]
8-960-073-51	o	ALIGNMENT TAPE, ZR5-1P [for PAL]
8-960-073-61	o	ALIGNMENT TAPE, ZR2-1P [for PAL]
9-911-053-00	o	THICKNESS GAUGE
9-919-573-01	o	CLEANING FLUID